AQ3102 Series, 1pF, ±30kV Diode Array

AUTOMOTIVE GRADE HF RoHS Pb GREEN

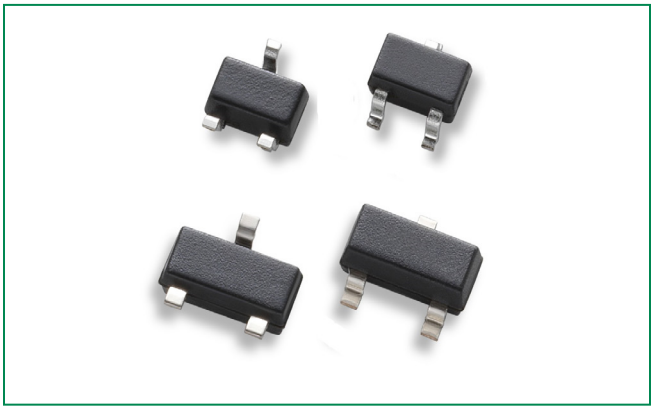

Description

The AQ3102 Series integrates 2 channels of low capacitance steering diodes and an additional zener diode to provide protection for automotive electronics equipment that may experience destructive electrostatic discharges (ESD). The AQ3102 Series can safely absorb repetitive ESD strikes above the maximum contact level specified in IEC 61000-4-2 international standard (Level 4, ±8kV contact discharge) without performance degradation.

The low off-state capacitance makes it ideal for protecting high-speed signal lines such as USB2.0 or USB 3.0 and 1Gb Ethernet with an extremely low dynamic resistance to protect the most sensitive, state of the art chipsets against ESD transients.

Pinout

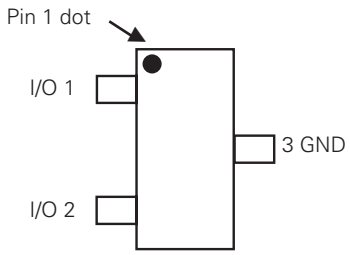

SOT23-3L and SC70-3L

Features

- ESD, IEC 61000-4-2, ±30kV contact, ±30kV air
- ESD, ISO 10605, 330pF 330Ω, ±30kV contact, ±30kV air
- EFT, IEC 61000-4-4, 80A (t_p=5/50ns)
- Lightning, 8A (8/20µs as defined in IEC 61000-4-5 2nd Edition)
- Low capacitance of 1pF (TYP) per I/O
- Low leakage current of 0.01µA (TYP) at 5V
- AEC-Q101 qualified
- Moisture Sensitivity Level(MSL -1)
- Halogen-Free, Lead-Free and RoHS-Compliant
- PPAP capable

Functional Block Diagram

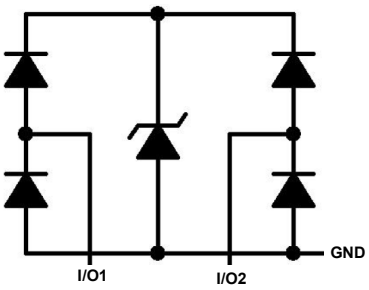

Applications

- LCD/PDP TVs
- External Storages
- DVD/Blu-ray Players
- Set Top Boxes
- Smartphones
- Ultrabooks/Notebooks
- Digital Cameras
- Portable Medical
- Automotive Electronics
- Wearable Technology

Life Support Note:
Not Intended for Use in Life Support or Life Saving Applications
The products shown herein are not designed for use in life sustaining or life saving applications unless otherwise expressly indicated.

©2020 Littelfuse, Inc.
Specifications are subject to change without notice.
Revision: 03/04/20

TVS Diode Arrays (SPA® Diodes)

Low Capacitance ESD Protection - AQ3102 Series

Absolute Maximum Ratings

Symbol	Parameter	Value	Units
I_{PP}	Peak Current (t_p=8/20µs)	8	A
T_{OP}	Operating Temperature	-40 to 150	°C
T_{STOR}	Storage Temperature	-55 to 150	°C

CAUTION: Stresses above those listed in "Absolute Maximum Ratings" may cause permanent damage to the component. This is a stress only rating and operation of the component at these or any other conditions above those indicated in the operational sections of this specification is not implied.

Electrical Characteristics (T_{OP}=25°C)

Parameter	Symbol	Test Conditions	Min	Typ	Max	Units
Reverse Standoff Voltage	V_{RWM}	I_R = 1µA			6.0	V
Breakdown Voltage	V_{BR}	I_R = 1mA	6.5	7.8		V
Reverse Leakage Current	I_{LEAK}	V_R=5V, Any I/O to GND		0.01	0.5	µA
Clamp Voltage[1]	V_C	I_{PP}=1A, t_p=8/20µs, Fwd		9.2	12	V
		I_{PP}=8A, t_p=8/20µs, Fwd		13	16	V
Dynamic Resistance[2]	R_{DYN}	TLP, t_p=100ns, I/O to GND		0.24		Ω
ESD Withstand Voltage[1]	V_{ESD}	IEC 61000-4-2 (Contact)	±30			kV
		IEC 61000-4-2 (Air)	±30			kV
Diode Capacitance[3]	$C_{I/O-GND}$	Reverse Bias=0V, f= 3 GHz		1		pF
	$C_{I/O-I/O}$			0.5		

Note: 1 Parameter is guaranteed by design and/or component characterization.

2. Transmission Line Pulse (TLP) with 100ns width, 0.2ns rise time, and average window t1=70ns to t2= 90ns.

3. Package sizes larger than 0201 can add parasitic capacitance, inductance and resistance.

8/20µs Pulse Waveform

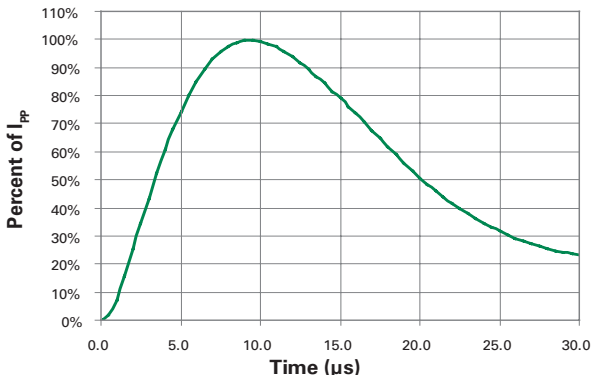

Clamping voltage vs. I_{PP} for 8/20µs waveshape

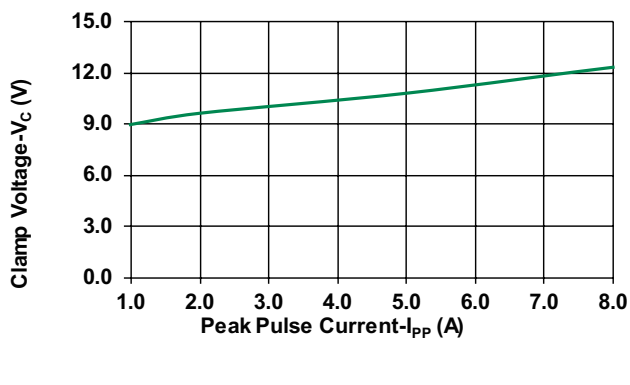

©2020 Littelfuse, Inc.
Specifications are subject to change without notice.

Revision: 03/04/20

Positive Transmission Line Pulsing (TLP) Plot

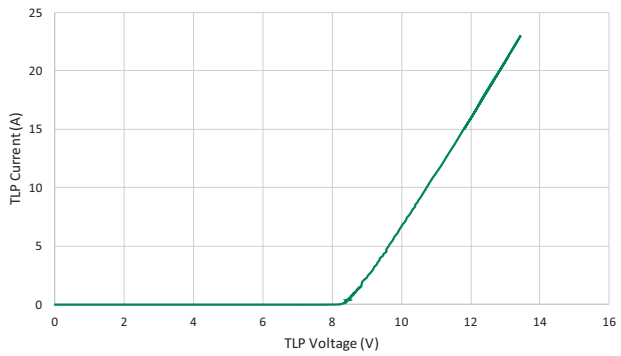

Negative Transmission Line Pulsing (TLP) Plot

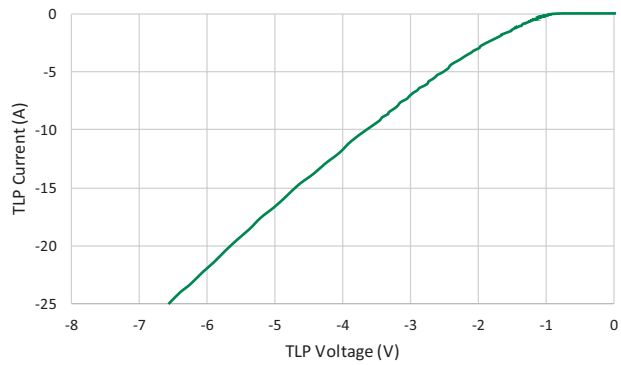

IEC 61000-4-2 +8 kV Contact ESD Clamping Voltage

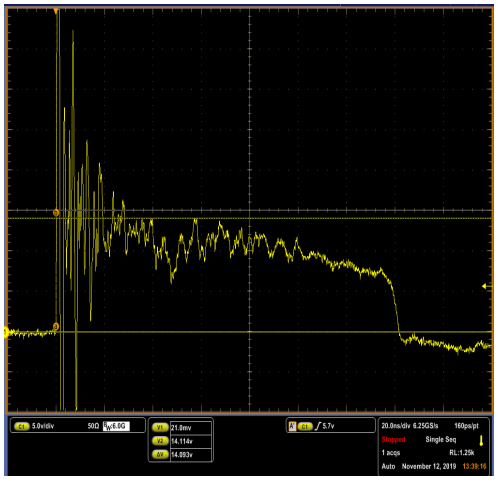

IEC 61000-4-2 -8 kV Contact ESD Clamping Voltage

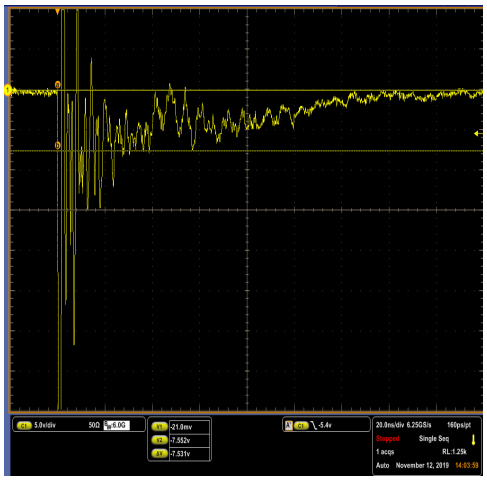

ISO 10605 (C:330pF, R:330Ω) contact discharge plot at +8KV

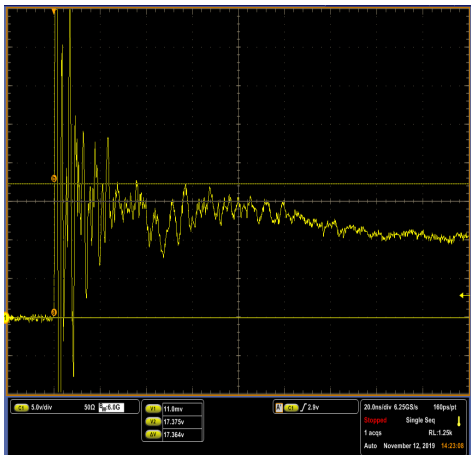

ISO 10605 (C:330pF, R:330Ω) contact discharge plot at -8KV

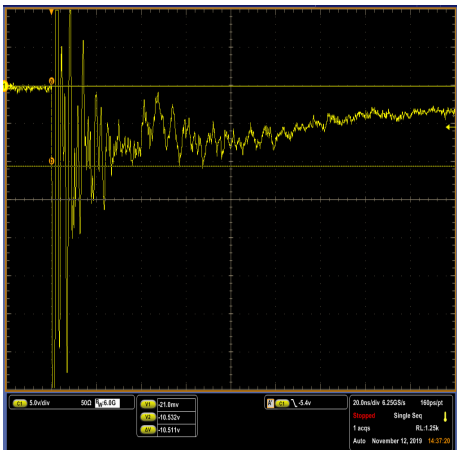

©2020 Littelfuse, Inc.
Specifications are subject to change without notice.
Revision: 03/04/20

TVS Diode Arrays (SPA® Diodes)

Low Capacitance ESD Protection - AQ3102 Series

Soldering Parameters

Reflow Condition		Pb – Free assembly
Pre Heat	- Temperature Min ($T_{s(min)}$)	150°C
	- Temperature Max ($T_{s(max)}$)	200°C
	- Time (min to max) (t_s)	60 – 180 secs
Average ramp up rate (Liquidus) Temp (T_L) to peak		3°C/second max
$T_{S(max)}$ to T_L - Ramp-up Rate		3°C/second max
Reflow	- Temperature (T_L) (Liquidus)	217°C
	- Temperature (t_L)	60 – 150 seconds
Peak Temperature (T_P)		$260^{+0/-5}$ °C
Time within 5°C of actual peak Temperature (t_p)		20 – 40 seconds
Ramp-down Rate		6°C/second max
Time 25°C to peak Temperature (T_P)		8 minutes Max.
Do not exceed		260°C

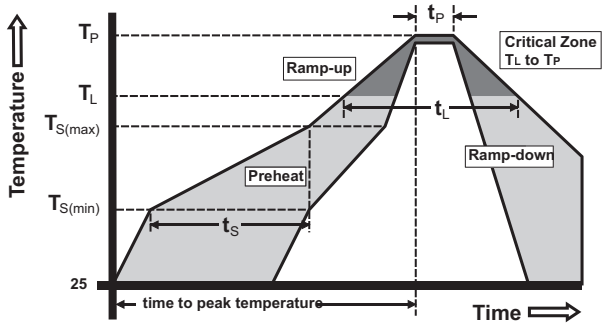

Product Characteristics

Lead Plating	Matte Tin
Lead Material	Copper Alloy
Lead Coplanarity	0.004 inches (0.102mm)
Substrate Material	Silicon
Body Material	Molded Compound
Flammability	UL Recognized compound meeting flammability rating V-0

Part Numbering System

AQ 3102 - xx x T G

- AQ 3102: Automotive Grade TVS Diode Arrays (SPA® Diodes) — Series
- xx: Number of Channels — 02 = 2 channel
- x: Package — H=SOT23-3L, J=SC70-3L
- T: T= Tape & Reel
- G: G= Green

Part Marking System

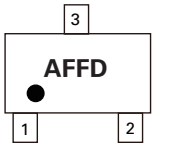

AF : Part Code
F : Assembly Code
D : Date Code

Ordering Information

Part Number	Package	Min. Order Qty.
AQ3102-02HTG	SOT23-3L	3000
AQ3102-02JTG	SC70-3L	3000

©2020 Littelfuse, Inc.
Specifications are subject to change without notice.
Revision: 03/04/20

Package Dimensions — SOT23-3L

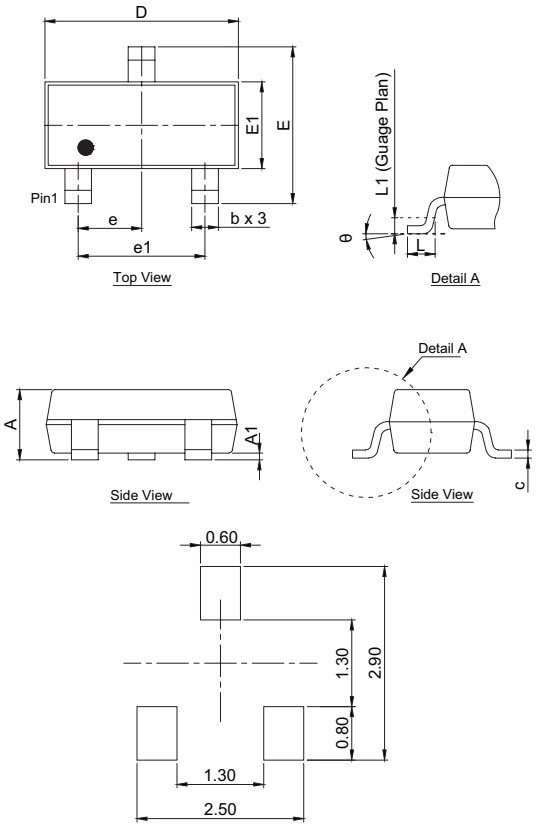

Recommended soldering pad layout (unit :mm)

Drawing# : H03-B

Package	SOT23-3L					
Pins	3					
JEDEC	TO-236					
	Millimeters			Inches		
	Min	Nom	Max	Min	Nom	Max
A	0.90	1.00	1.15	0.035	0.039	0.045
A1	0.00	-	0.10	0.000	-	0.004
b	0.30	0.40	0.51	0.012	0.0157	0.020
c	0.08	-	0.20	0.003	-	0.008
D	2.80	2.95	3.04	0.110	0.116	0.120
E	2.10	2.40	2.64	0.083	0.094	0.104
E1	1.20	1.30	1.40	0.047	0.051	0.055
e	0.95 BSC			0.037 BSC		
e1	1.90 BSC			0.075 BSC		
L	0.30	0.45	0.55	0.012	0.018	0.022
L1	0.25 BSC			0.010 BSC		
θ	0°	-	8°	0°	-	8°

Embossed Carrier Tape & Reel Specification — SOT23-3L

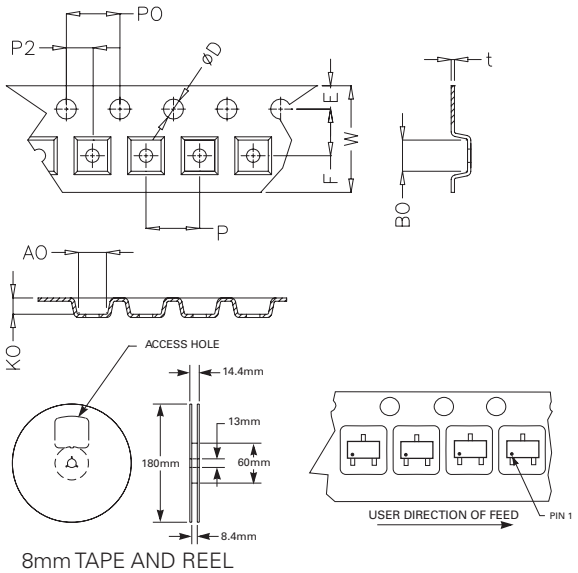

8mm TAPE AND REEL

Symbol	Millimeters		Inches	
	Min	Max	Min	Max
E	1.65	1.85	0.065	0.073
F	3.40	3.60	0.134	0.142
P2	1.90	2.10	0.075	0.083
D	1.40	1.60	0.055	0.063
P0	3.90	4.10	0.154	0.161
W	7.70	8.30	0.303	0.327
P	3.90	4.10	0.154	0.161
A0	3.05	3.25	0.120	0.128
B0	2.67	2.87	0.105	0.113
K0	1.12	1.32	0.044	0.052
t	0.22	0.24	0.009	0.009

©2020 Littelfuse, Inc.
Specifications are subject to change without notice.
Revision: 03/04/20

Package Dimensions — SC70-3L

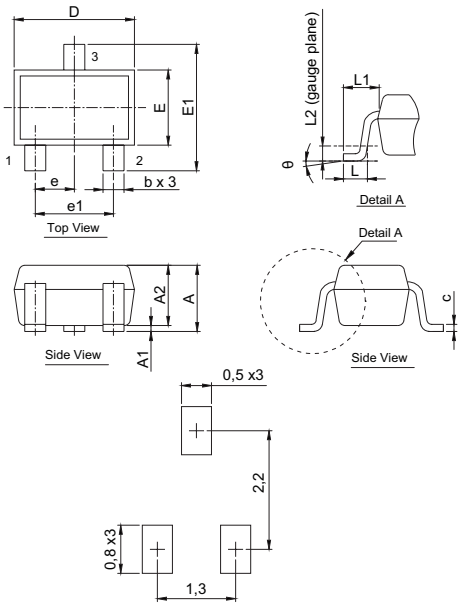

Recommended Soldering Pad Layout (unit :mm)

Drawing # : J01-A

Package	SC70-3L			
Pins	3			
JEDEC	MO-203			
	Millimeters		Inches	
	Min	Max	Min	Max
A	0.80	1.10	0.031	0.043
A1	0.00	0.10	0.000	0.004
A2	0.80	1.00	0.031	0.039
b	0.15	0.40	0.006	0.016
c	0.08	0.22	0.003	0.009
D	1.80	2.20	0.071	0.087
E	1.15	1.35	0.045	0.053
E1	2.10	2.45	0.083	0.096
e	0.65 TYP		0.026 TYP	
e1	1.20	1.40	0.047	0.055
L	0.26	0.46	0.010	0.018
L1	0.525 REF		0.021	
L2	0.20 BSC		0.008	
θ	0°	8°	0°	8°

Embossed Carrier Tape & Reel Specification — SC70-3L

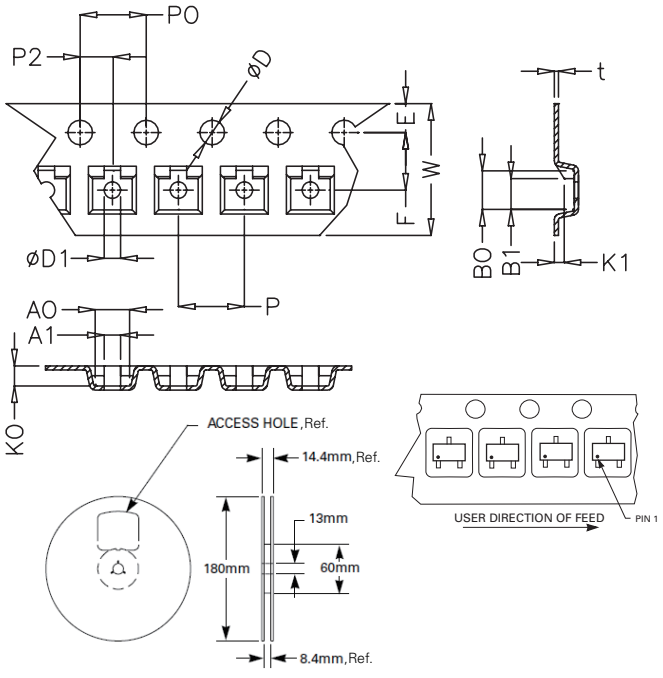

8mm TAPE AND REEL

Dimensions

	Millimeters		Inches	
	Min	Max	Min	Max
E	1.65	1.85	0.065	0.073
F	3.45	3.55	0.135	0.139
P2	1.95	2.05	0.077	0.081
D	1.40	1.60	0.055	0.063
D1	1.00	1.25	0.039	0.049
P0	3.90	4.10	0.154	0.161
10P0	40.0 +/- 0.20		1.574 +/- 0.008	
W	7.70	8.10	0.303	0.318
P	3.90	4.10	0.153	0.161
A0	2.30	2.50	0.090	0.098
A1	1.00 Ref		0.039 Ref	
B0	2.30	2.50	0.090	0.098
B1	1.90 Ref		0.074	
K0	1.10	1.30	0.043	0.051
K1	0.60 Ref		0.023 Ref	
t	0.27 max		0.010	

Disclaimer Notice - Information furnished is believed to be accurate and reliable. However, users should independently evaluate the suitability of and test each product selected for their own applications. Littelfuse products are not designed for, and may not be used in, all applications. Read complete Disclaimer Notice at http://www.littelfuse.com/disclaimer-electronics.

©2020 Littelfuse, Inc.
Specifications are subject to change without notice.

Revision: 03/04/20