Lead Type Disc Medium And High Voltage Ceramic Capacitors-HV Series (500VDC-6.3KVDC) Data Sheet

Feature

■Wide capacitance range from 100pF to 100000pF.

■Operating Temperature: -25℃～85℃.

■Storage Temperature: 15℃~35℃.

■The high voltage disc ceramic capacitors have feature of withstanding higher voltage.

Applications

■These capacitors are used in bypass and coupling circuit, and those capacitors with low dissipation factor are particularly suitat be used in cicuits such as line scanning in Tvset

Part Number Code

N	07	F	1	B	472	M	N0	B	0	S	0	N	0

Rated Voltage
L: 500VDC
N: 1KVDC
R: 2KVDC
S: 3KVDC
T: 4KVDC
W: 5KVDC
A: 6KVDC

Core Diameter
04: 4.0mm
05: 5.0mm
16: 16.0mm
C0: 5.0mm
C4: 5.4mm
C6: 5.6mm

Temperature Characteristic
A:NP0 S:SL
B:Y5P E:Y5U
F:Y5V

Foot Type
1:Long straight
2:Outside Crimped
3:Short Straight
4:Inner Crimped
8:Vertical Crimped

Pitch
A:2.5mm
B:5.0mm
E:7.5mm
D:10.0mm

Nominal capacitance
10:100pF
100:101pF
222:2200pF
103:10000pF

Tolerance
C:±0.25pF
J±5%
:K:±10%
M:±20%

Lead Length (Bulk)
X0~X9:2.0~2.9mm
A0~A9:3.0~3.9mm
B0~B9:4.0~4.9mm
C0~C9:5.0~5.9mm
D0~D9:6.0~6.9mm
E0~E9:7.0~7.9mm
N0:16~27.0mm

Lead Length (Tape)
Crimped Lead Taped
N0:H0=16.5mm
P0:H0=17.0mm
Q0:H0=19.0mm
Straight Lead
Q0:H020.0mm

Package
B: Bulk
T:Tape

Environmental Standard
0:RoHS
2:RoHS+Halogen-Free

Inner Management

Specifications

Capacitance and Dissipation factor testing condition	SL/NP0:25℃、1±0.1MHz、1.0Vrms Y5P/Y5U/Y5V:25℃、1±0.1MHz、1.0Vrms
Dissipation Factor(tanδ)	SL/NPO:≤0.15% Y5P/Y5U/Y5V:≤2.5%
Rated Voltage	500VDC、1000VDC、2000VDC、3000VDC、4000VDC、5000VDC、6000VDC
Withstand Voltage	$1.5U_R$+500V(DC)
Insulation Resistance (I.R.)	SL/NP0:IR≥10000MΩ;Y5P/Y5U/Y5V:IR≥4000MΩ
Temperature Characteristic	SL、NP0、Y5P、Y5U、Y5V

Dimensions (mm)

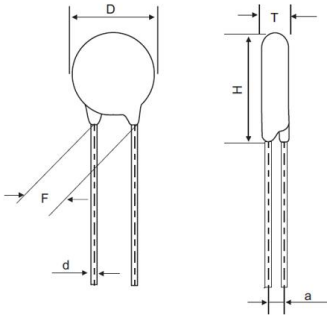

Rated Voltage (VDC)	Temperature Coefficient Group					Dimension (mm)		Lead Size (mm)	
	Y5P (B)	Y5U (E)	Y5V (F)	SL	NP0	D±1	T±1	F	d±0.05
	Nominal Capacitance（pF）								
500	150-1500	2200	3300-4700	20-100	0.5-22	5.5	2.0	5.0±0.8	0.5
	/	3300-4700	6800	/	/	6.5			
	2200	/	10000	/	/	7.5			
	3300	10000	/	/	/	9.5			
	4700	/	20000-22000	/	/	10.5	2.5		0.6
	10000	/	/	/	/	14.5	2.5	7.5±0.8	0.6
	/	/	47000	/	/	14.5			
	/	/	100000	/	/	20.0	3.0	10.0±0.8	0.7
1000	/	/	/	20-100	0.5-22	5.5	2.0	5.0±0.8	0.5
	100-820	/	/	/	/	5.5	2.5		
	1000	/	/	/	/	6.0			
	/	1500-3300	4700	/	/	6.5			
	1500-1800	4700	/	/	/	7.5			
	2200-2700	/	10000	/	/	8.5			
	/	6800	15000	/	/	9.5			
	3300	10000	/	/	/	10.5			0.6
	4700	/	/	/	/	12.0			
	/	/	20000-22000	/	/	13.0		7.5±0.8	
	/	/	33000	/	/	15.0			
	/	/	47000	/	/	17.0		10.0±0.8	
	10000	/	/	/	/	17.5			
	/	/	100000	/	/	22.5	3.0		0.7
2000	100-470	1000	1500-2200	/	/	6.0	2.5/3.0	5.0±0.8	0.5
	/	/	/	10-120	0.5-10	6.5			
	680-820	/	3300	/	/	7.0			
	1000	2200	4700	/	/	8.0	3.0		
	1500	4700	6800	/	/	10.0		7.5±0.8	0.6
	2200	/	10000	/	/	11.0			
	2700	/	/	/	/	12.0			
	3300	/	/	/	/	13.0			
	4700	10000	20000-22000	/	/	14.5			

Rated Voltage (VDC)	Temperature Coefficient Group					Dimension (mm)		Lead Size (mm)	
	Y5P(B)	Y5U(E)	Y5V(F)	SL	NPO	D±1	T±1	F	d±0.05
	Nominal Capacitance（pF）								
3000	100-470	1000	1000-1500	10-39	/	6.0	3.5	7.5±0.8	0.6
	270-680	/	2200	47-56	/	7.0			
	/	1500	3300	68-82	/	8.0			
	1000	2200	4700	/	/	9.0			
	/	3300	/	/	/	10.5			
	/	4700	/	/	/	13.0		10.0 ±0.8	0.7
	/	/	10000	/	/	13.5			
	/	10000	/	/	/	17.5			
	/	/	20000-22000	/	/	20.5			
4000	100-470	1000	1500	10-39	/	6.0	3.5	7.5±0.8	0.6
	270-680	/	2200	47-56	/	7.0			
	/	1500	3300	68-82	/	8.0			
	1000	2200	4700	/	/	9.0			
	/	3300	/	/	/	10.5			
	/	4700	/	/	/	13.0		10.0 ±0.8	0.7
	/	/	10000	/	/	13.5			
	/	10000	/	/	/	17.5			
	/	/	20000-22000	/	/	20.5			
5000	100-220	330-470	1000	/	/	6.0	3.5/4.5	10.0 ±0.8	0.6/0.7
	330	560-1000	1500	/	/	7.0	4.5		
	470	/	2200	/	/	8.0			
	560-680	1500	/	/	/	9.0			
	/	2200	3300	/	/	10.0			
	1000	/	4700	/	/	11.0			
	/	3300	/	/	/	13.5			
	/	4700	/	/	/	16.5			
6000	100-220	330-470	1000	/	/	6.0	3.5/4.5	10.0 ±0.8	0.6/0.7
	330	560-1000	1500	/	/	7.0	4.5		
	470	/	2200	/	/	8.0			
	560-680	1500	/	/	/	9.0			
	/	2200	3300	/	/	10.0			
	1000	/	4700	/	/	11.0			
	/	3300	/	/	/	13.5			
	/	4700	/	/	/	16.5			

Lead Configuration

Lead Style	Drawing	Lead Length L (mm)	Coating Lead Length C (mm)
Long Straight	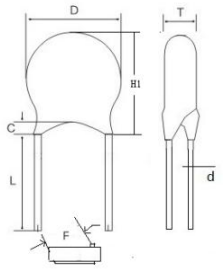	16.0 min	①C≤2.5mm (Product diameter < 12mm) ②C≤3.0mm (Product diameter≥12mm)
Short Straight	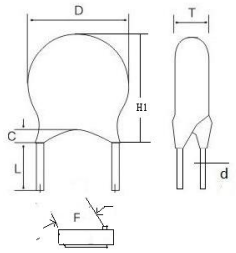	①[2.5≤L＜6.0]+/-0.5; ②[6.0≤L≤10]+/-1.0	①C≤2.5mm (Product diameter < 12mm) ②C≤3.0mm (Product diameter≥12mm)
Outside Crimped	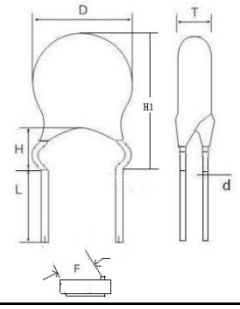	①[2.5≤L＜6.0]+/-0.5; ②[6.0≤L≤10]+/-1.0	Not exceed the bend point
Inner Crimped	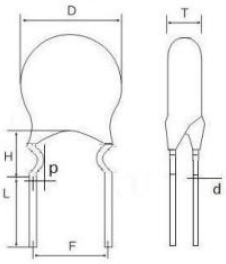	①[2.5≤L＜6.0]+/-0.5; ②[6.0≤L≤10]+/-1.0	Not exceed the bend point
Vertical Crimped	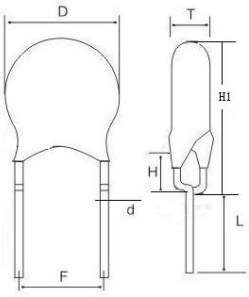	①[2.5≤L＜6.0]+/-0.5; ②[6.0≤L≤10]+/-1.0	Not exceed the bend point

Taping And Dimensions (mm)

<table>
<tr><th rowspan="2">Figure</th><th colspan="2">Fig.1</th><th colspan="4">Fig.2</th></tr>
<tr><td>Symbol</td><td>P=5.0</td><td colspan="2">P=7.5</td><td colspan="2">P=10.0</td></tr>
<tr><td rowspan="11">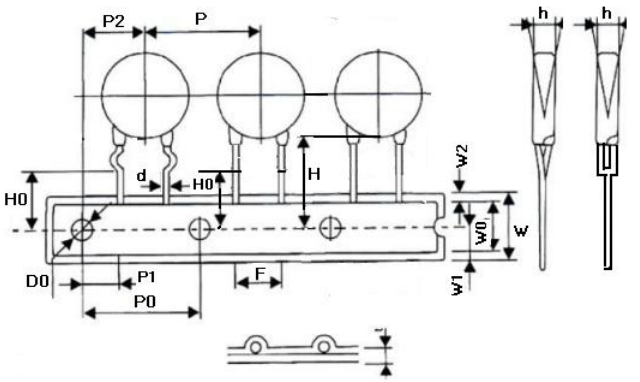
</td><td>Po</td><td colspan="2">12.7±0.3</td><td colspan="2">12.7±0.3</td><td colspan="2">12.7±0.3</td></tr>
<tr><td>P</td><td colspan="2">12.7±1.0</td><td colspan="2">25.4±1.0</td><td colspan="2">25.4±1.0</td></tr>
<tr><td>P1</td><td colspan="2">3.85±0.7</td><td colspan="2">8.95±0.7</td><td colspan="2">7.7±0.7</td></tr>
<tr><td>P2</td><td colspan="2">6.35±1.3</td><td colspan="2">12.7±1.3</td><td colspan="2">12.7±1.3</td></tr>
<tr><td>F</td><td colspan="2">5±0.8</td><td colspan="2">7.5±0.8</td><td colspan="2">10.0±0.8</td></tr>
<tr><td>Δh</td><td colspan="2">0±2.0</td><td colspan="2">0±2.0</td><td colspan="2">0±2.0</td></tr>
<tr><td>W</td><td colspan="2">18.0+1.5/-1.0</td><td colspan="2">18.0 +1.5/-1.0</td><td colspan="2">18.0 +1.5/-1.0</td></tr>
<tr><td>Wo</td><td colspan="2">10.5 Max</td><td colspan="2">10.5 Max</td><td colspan="2">10.5 Max</td></tr>
<tr><td>W1</td><td colspan="2">9.0+0.75/-0.5</td><td colspan="2">9.0+0.75/-0.5</td><td colspan="2">9.0+0.75/-0.5</td></tr>
<tr><td>W2</td><td colspan="2">3.0 Max</td><td colspan="2">3.0 Max</td><td colspan="2">3.0 Max</td></tr>
<tr><td>Do</td><td colspan="2">4.0±0.2</td><td colspan="2">4.0±0.2</td><td colspan="2">4.0±0.2</td></tr>
<tr><td>Fig.1 (P=5.0)</td><td>H</td><td colspan="2">20+1.5/-1.0</td><td colspan="2">20+1.5/-1.0</td><td colspan="2">20+1.5/-1.0</td></tr>
<tr><td rowspan="4">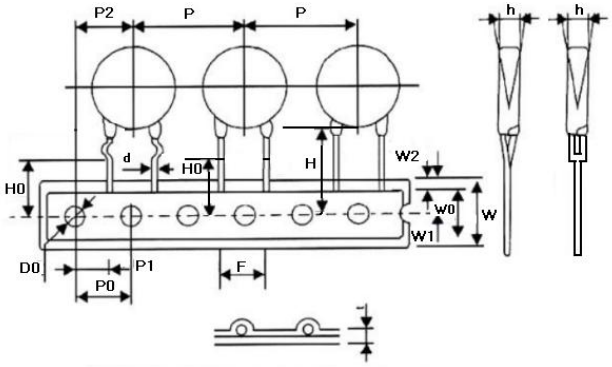
</td><td>Ho</td><td colspan="2">16.5&17.0&19.0 +1.5/-1.0</td><td colspan="2">16.5&17.0&19.0 +1.5/-1.0</td><td colspan="2">16.5&17.0&19.0 +1.5/-1.0</td></tr>
<tr><td rowspan="2">L</td><td>Straight Lead</td><td>Crimped Lead</td><td>Straight Lead</td><td>Crimped Lead</td><td>Straight Lead</td><td>Crimped Lead</td></tr>
<tr><td>11.0 Max</td><td>9.0 Max</td><td>11.0 Max</td><td>9.0 Max</td><td>11.0 Max</td><td>9.0 Max</td></tr>
<tr><td>t1</td><td colspan="2">0.5±0.2</td><td colspan="2">0.5±0.2</td><td colspan="2">0.5±0.2</td></tr>
<tr><td>Fig.2 (P=7.5 & 10)</td><td>t2</td><td colspan="2">1.7 Max</td><td colspan="2">1.7 Max</td><td colspan="2">1.7 Max</td></tr>
</table>

Soldering Condition

Wave Soldering Graph

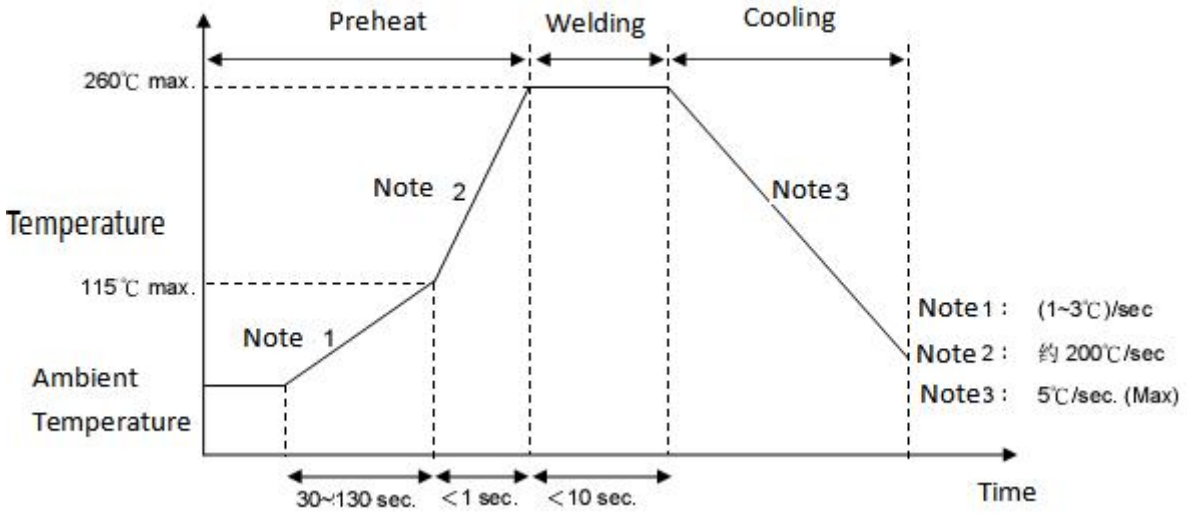

Note: Film capacitor is not suitable for reflow soldering, because it will cause thermal contraction and affect electrical performance.

Iron Soldering Condition

Item	Condition
Temperature of soldering copper bit	350℃（max.）
Soldering duration	3sec（max.）
Space between soldering position and coating layer	2mm（min.）