

钍地半导体
Tudi Semiconductor

Product Specification

TUDI-AT24C32D

I²C-Compatible (2-Wire) Serial EEPROM 32-Kbit

网址 www.sztdbdt.com

用芯智造·卓越品质

semiconductor device manufacturer

- Design
- research and development
- production
- and sales

Features

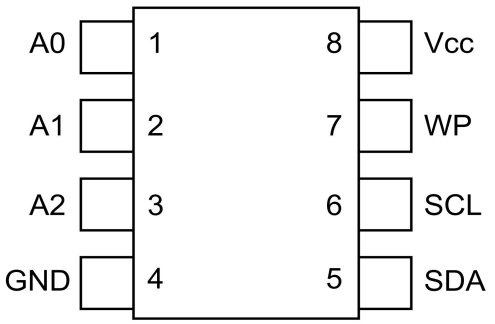

SOP8/TSSOP8

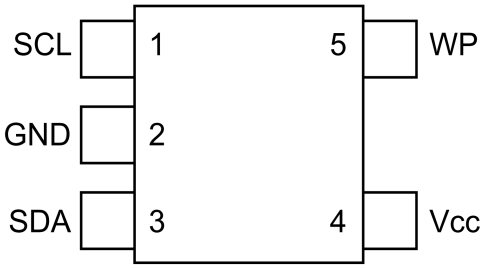

SOT23-5

- ●Low-Voltage and Standard-Voltage Operation:
  - – V_{CC}=1.7V to 5.5V
- ●Internally Organized as 4,096 x 8 (32K)
- ●Industrial Temperature Range: -40°C to +85°C
- ●I^2C-Compatible (2-Wire) Serial Interface:
  - – 100 kHz Standard mode, 1.7V to 5.5V
  - – 400 kHz Fast mode, 1.7V to 5.5V
  - – 1 MHz Fast Mode Plus (FM+), 2.5V to 5.5V
- ●Schmitt Triggers, Filtered Inputs for Noise Suppression
- ●Bidirectional Data Transfer Protocol
- ●Write-Protect Pin for Full Array Hardware Data Protection
- ●Ultra Low Active Current (3 mA maximum) and Standby Current (6 µA maximum)
- ●32-Byte Page Write Mode:
  - – Partial page writes allowed
- ●Random and Sequential Read Modes
- ●Self-Timed Write Cycle within 5 ms Maximum
- ●High Reliability:
  - – Endurance: 1,000,000 write cycles
  - – Data retention: 100 years
- ●Green Package Options (Lead-free/Halide-free/RoHS compliant)

Description

The AT24C32D provides 32,768 bits of Serial Electrically Erasable and Programmable Read-Only Memory (EEPROM) organized as 4,096 words of 8 bits each. The device ’ s cascading feature allows up to eight devices to share a common 2-wire bus. The device is optimized for use in many industrial and commercial applications where low-power and low-voltage operation are essential. The devices are available in space-saving 8-lead SOIC, 8-lead TSSOP, 5-lead SOT23 packages. All packages operate from 1.7V to 5.5V

Pin Descriptions

The descriptions of the pins are listed in Table 1.

Table 1.Pin Function

Name	8-Lead SOIC	8-Lead TSSOP	5-Lead SOT23	Function
A0(2)	1	1	—	Device Address Input
A1(2)	2	2	—	Device Address Input
A2(2)	3	3	—	Device Address Input
GND	4	4	2	Ground
SDA	5	5	3	Serial Data
SCL	6	6	1	Serial Clock
WP(2)	7	7	5	Write-Protect
V_{CC}	8	8	4	Device Power Supply

Note:
1. The exposed pad on this package can be connected to GND or left floating.
2. If the A0, A1, A2 or WP pins are not driven, they are internally pulled down to GND. In order to operate in a wide variety of application environments, the pull-down mechanism is intentionally designed to be somewhat strong. Once these pins are biased above the CMOS input buffer ' s trip point (~0.5 x V_{CC}), the pull-down mechanism disengages.

Device Address Inputs (A0, A1, A2): The A0, A1 and A2 pins are device address inputs that are hard-wired (directly to GND or to V_{CC}) for compatibility with other 2-wire Serial EEPROM devices. When the pins are hard-wired, as manyas eight devices may be addressed on a single bus system . A device is selected when a corresponding hardware and software match is true. If these pins are left floating, the A0, A1 and A2 pins will be internally pulled down to GND. However, due to capacitive coupling that may appear in customer applications, TUDI recommends always connecting the address pins to a known state. When using a pull-up resistor, TUDI recommends using 10 kΩ or less.

Ground: The ground reference for the power supply. GND should be connected to the system ground.

Write-Protect (WP): The write-protect input, when connected to GND, allows normal write operations. When the WP pin is connected directly to Vcc, all write operations to the protected memory are inhibited. If the pin is left floating, the WP pin will be internally pulled down to GND. However, due to capacitive coupling that may appear in customer applications, TUDI recommends always connecting the WP pin to a known state. When using a pull-up resistor, TUDI recommends using 10 kΩ or less.

Serial Clock (SCL): The SCL pin is used to provide a clock to the device and to control the flow of data to and from the device. Command and input data present on the SDA pin is always latched in on the rising edge of SCL,while output data on the SDA pin is clocked out on the falling edge of SCL. The SCL pin must either be forced high when the serial bus is idle or pulled high using an external pull-up resistor.

Serial Data (SDA): The SDA pin is an open-drain bidirectional input/output pin used to serially transfer data to and from the device. The SDA pin must be pulled high using an external pull-up resistor (not toexceed 10 kΩ in value) and may be wire-ORed with any number of other open-drain or open-collector pins from other devices on the same bus.

Device Power Supply: The Vcc pin is used to supply the source voltage to the device. Operations at invalid Vcc voltages may produce spurious results and should not be attempted.

Table 2.Write-Protect

WP Pin Status	Part of the Array Protected
At Vcc	Full Array
At GND	Normal Write Operations

System Configuration Using 2-Wire Serial EEPROMs

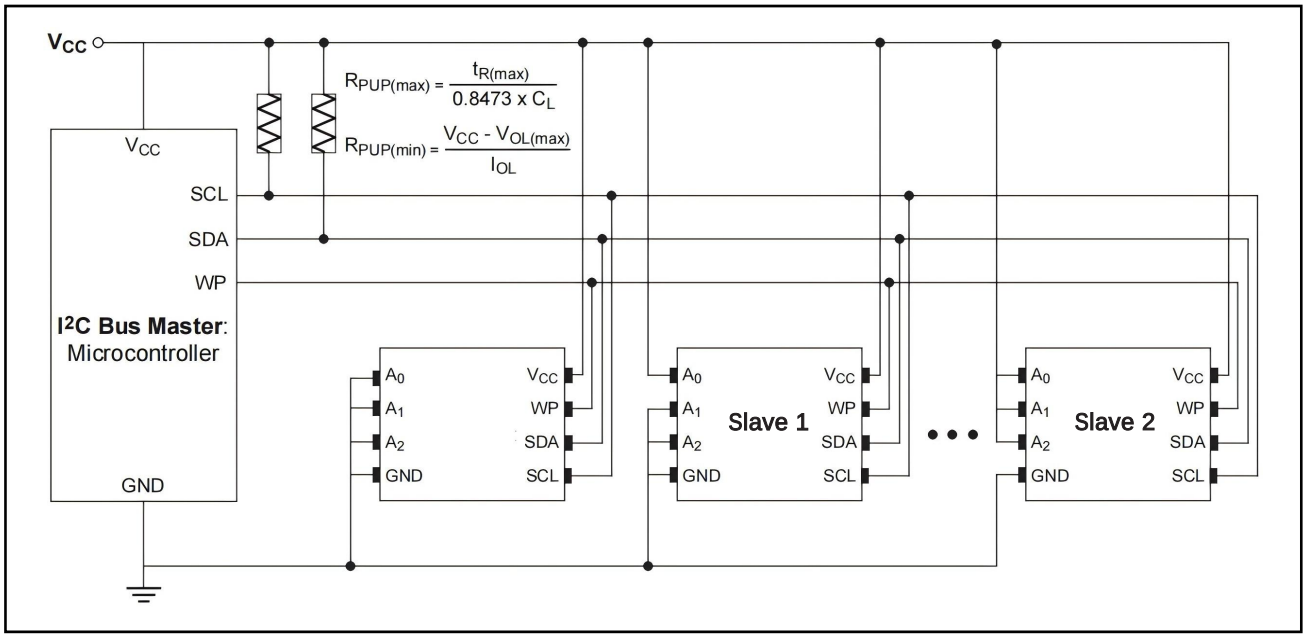

Block Diagram

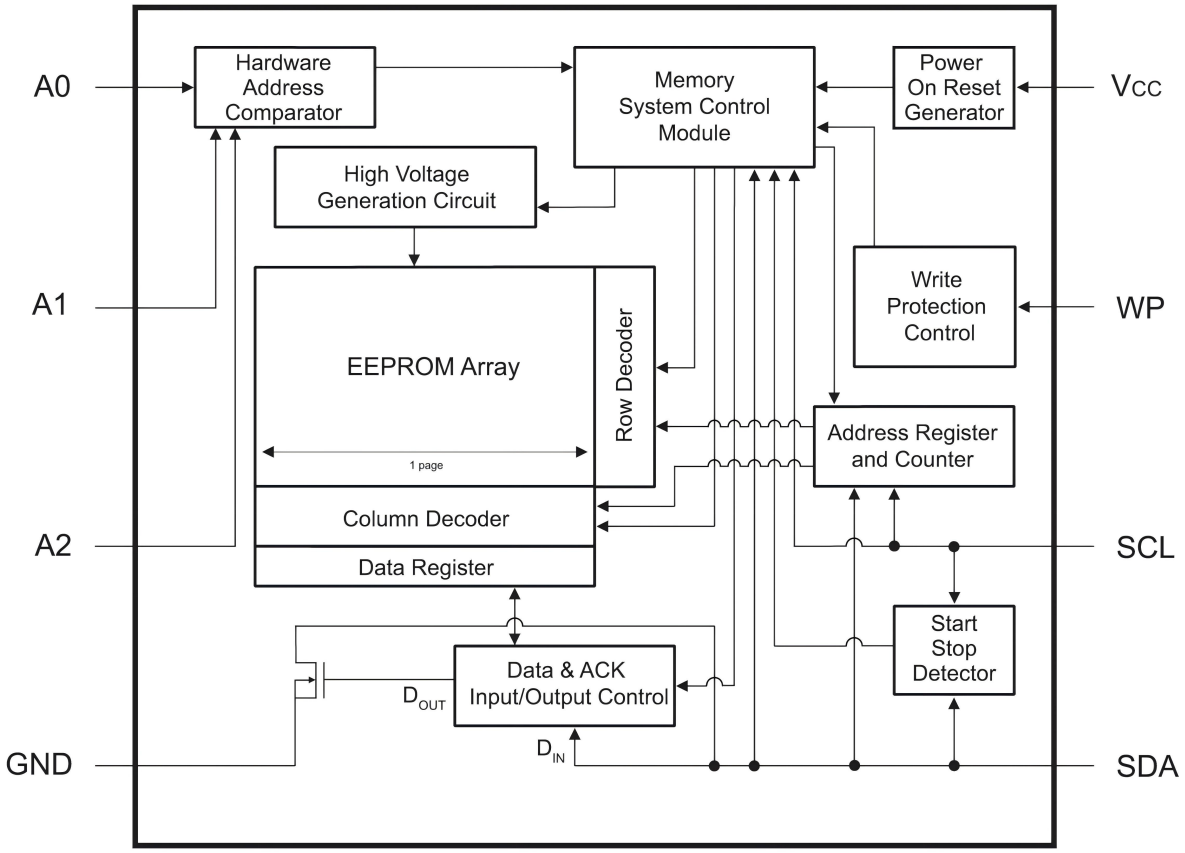

Electrical Characteristics

Absolute Maximum Ratings

Temperature under bias	Storage temperature	V_{CC}	Voltage on any pin with respect to ground	DC output current	ESD protection
-55°C to +125°C	-65°C to +150°C	6.25V	-1.0V to +7.0V	5.0 mA	>3kV

Note:Stresses above those listed under “Absolute Maximum Ratings” may cause permanent damage to the device. This is a stress rating only and functional operation of the device at these or any other conditions above those indicated in the operation listings of this specification is not implied. Exposure to absolute maximum rating conditions for extended periods may affect device reliability

Table 3.DC and AC Operating Range

AT24C32D		
Operating Temperature(Case)	Industrial Temperature Range	-40°Cto+85°C
V_{CC} Power Supply	Low Voltage Grade	1.7V to 5.5V

Table 4.DC Characteristics

Parameter	Symbol	Min.	Typ.	Max.	Units	Test Conditions
Supply Voltage	V_{CC1}	1.7	—	5.5	V	
Supply Current	I_{CC1}	—	0.4	1.0	mA	V_{CC}=5.0V,Read at 400 kHz
Supply Current	I_{CC2}	—	2.0	3.0	mA	V_{CC}=5.0V,Write at 400 kHz
Standby Current	I_{SB1}	—	—	1.0	μA	V_{CC}=1.7V,V_{IN}=V_{CC} or GND
		—	—	6.0	μA	V_{CC}=5.0V,V_{IN}=V_{CC} or GND
Input Leakage Current	I_{LI}	—	0.10	3.0	μA	VIN=V_{CC} or GND;V_{CC}=5.0V
Output Leakage Current	I_{LO}	—	0.05	3.0	μA	VOUT=V_{CC} or GND;V_{CC}=5.0V
Input Low Level	V_{IL}	-0.6	—	V_{CC}×0.3	V	Note 2
Input High Level	V_{IH}	V_{CC}×0.7	—	V_{CC}+0.5	V	Note 2
Output Low Level	V_{OL1}	—	—	0.2	V	V_{CC}=1.7V,I_{OL}=0.15 mA
Output Low Level	V_{OL2}	—	—	0.4	V	V_{CC}=3.0V,I_{OL}=2.1 mA

Note:1. Typical values characterized at T_A = +25°C unless otherwise noted.
2. This parameter is characterized but is not 100% tested in production.

Table 5.AC Characteristics(1)

Parameter	Symbol	1.7V		2.5V,5.0V		Units
		Min.	Max.	Min.	Max.	
Clock Frequency,SCL	f_{SCL}	—	400	—	1000	kHz
Clock Pulse Width Low	t_{LOW}	1300	—	500	—	ns
Clock Pulse Width High	t_{HIGH}	600	—	400	—	ns
Noise Suppression Time(2)	t_I	—	100	—	50	ns
Clock Low to Data Out Valid	t_{AA}	50	900	50	450	ns
Bus Free Time between Stop and Start(2)	t_{BUF}	1300	—	500	—	ns
Start Hold Time	$t_{HD.STA}$	600	—	250	—	ns
Start Set-up Time	$t_{SU.STA}$	600	—	250	—	ns
Data In Hold Time	$t_{HD.DAT}$	0	—	0	—	ns
Data In Set-up Time	$t_{SU.DAT}$	100	—	100	—	ns
Inputs Rise Time(2)	t_R	—	300	—	300	ns
Inputs Fall Time(2)	t_F	—	300	—	100	ns
Stop Set-up Time	$t_{SU.STO}$	600	—	250	—	ns
Data Out Hold Time	t_{DH}	50	—	50	—	ns
Write Cycle Time	t_{WR}	—	5	—	5	ms

Note:
1. AC measurement conditions:
 – C_L = 100 pF
 – R_{PUP} (SDA bus line pull-up resistor to V_{CC}): 1.3 kΩ (1000 kHz), 4 kΩ (400 kHz), 10 kΩ (100 kHz)
 – Input pulse voltages: 0.3 V_{CC} to 0.7 V_{CC}
 – Input rise and fall times: ≤ 50 ns
 – Input and output timing reference voltages: 0.5 x V_{CC}
2. This parameter is ensured by characterization and is not 100% tested.

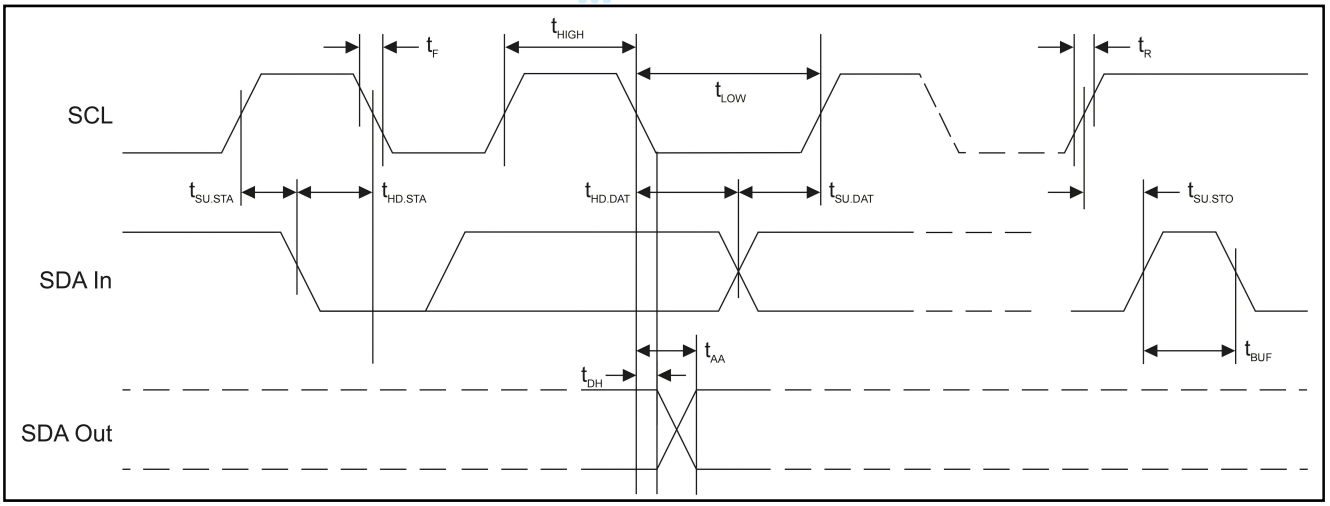

Figure 1.Bus Timing

Electrical Specifications

Power-up Requirements and Reset Behavior
During a power-up sequence, the VCC supplied to the AT24C32D should monotonically rise from GND to the minimum VCC level, as specified in Table 3, with a slew rate no faster than 0.1 V/µs.
Device Reset To prevent inadvertent write operations or any other spurious events from occurring during a power-up sequence, the AT24C32D includes a Power-on Reset (POR) circuit. Upon power-up, the device will not respond to any commands until the VCC level crosses the internal voltage threshold (VPOR) that brings the device out of Reset and into Standby mode.
The system designer must ensure the instructions are not sent to the device until the VCC supply has reached a stable value greater than or equal to the minimum VCC level. Additionally, once the VCC is greater than or equal to the minimum VCC level, the bus master must wait at least tPUP before sending the first command to the device. See Table 6 for the values associated with these power-up parameters

If an event occurs in the system where the VCC level supplied to the AT24C32D drops below the maximum VPOR level specified, it is recommended that a full power cycle sequence be performed by first driving the VCC pin to GND, waiting at least the minimum tPOFF time and then performing a new power-up sequence in compliance with the requirements defined in this section.

Table 6.Power-up Conditions(1)

Symbol	Parameter	Min.	Max.	Units
tPUP	Time required after VCC is stable before the device can accept commands	100	—	µs
VPOR	Power-on Reset Threshold Voltage	—	1.5	V
tPOFF	Minimum time at VCC=0V between power cycles	500	—	ms

Note:
1. These parameters are characterized but they are not 100% tested in production.

Table 7.Pin Capacitance (1)

Symbol	Test Condition	Max.	Units	Conditions
$C_{I/O}$	Input/Output Capacitance (SDA)	8	pF	$V_{I/O}$=0V
C_{IN}	Input Capacitance(A0,A1,A2 and SCL)	6	pF	V_{IN}=0V

Note:
1. This parameter is characterized but is not 100% tested in production.

Table 8.EEPROM Cell Performance Characteristics

Operation	Test Condition	Min.	Max.	Units
Write Endurance(1)	T_A=25°C,V_{CC}=3.3V,Page Write mode	1,000,000	—	Write Cycles
Data Retention(1)	T_A=55°C	100	—	Years

Note:
1. Performance is determined through characterization and the qualification process.

Device Operation and Communication

The AT24C32D operates as a slave device and utilizes a simple I^2C-compatible 2-wire digital serial interface to communicate with a host controller, commonly referred to as the bus master. The master initiates and controls all read and write operations to the slave devices on the serial bus, and both the master and the slave devices can transmit and receive data on the bus.
The serial interface is comprised of just two signal lines: Serial Clock (SCL) and Serial Data (SDA). The SCL pin is used to receive the clock signal from the master, while the bidirectional SDA pin is used to receive command and data information from the master as well as to send data back to the master. Data is always latched into the AT24C32D on the rising edge of SCL and always output from the device on the falling edge of SCL. Both the SCL and SDA pin incorporate integrated spike suppression filters and Schmitt Triggers to minimize the effects of input spikes and bus noise.
All command and data information is transferred with the Most Significant bit (MSb) first. During bus communication, one data bit is transmitted every clock cycle, and after eight bits (one byte) of data have been transferred, the receiving device must respond with either an Acknowledge (ACK) or a No-Acknowledge (NACK) response bit during a ninth clock cycle (ACK/NACK clock cycle) generated by the master. Therefore, nine clock cycles are required for every one byte of data transferred. There are no unused clock cycles during any read or write operation, so there must not be any interruptions or breaks in the data stream during each data byte transfer and ACK or NACK clock cycle.

During data transfers, data on the SDA pin must only change while SCL is low, and the data must remain stable while SCL is high. If data on the SDA pin changes while SCL is high, then either a Start or a Stop condition will occur. Start and Stop conditions are used to initiate and end all serial bus communication between the master and the slave devices. The number of data bytes transferred between a Start and a Stop condition is not limited and is determined by the master. In order for the serial bus to be idle, both the SCL and SDA pins must be in the logic-high state at the same time.

Clock and Data Transition Requirements

The SDA pin is an open-drain terminal and therefore must be pulled high with an external pull-up resistor. SCL is an input pin that can either be driven high or pulled high using an external pull-up resistor. Data on the SDA pin may change only during SCL low time periods. Data changes during SCL high periods will indicate a Start or Stop condition as defined below. The relationship of the AC timing parameters with respect to SCL and SDA for the AT24C32D are shown in the timing waveform in Figure 1. The AC timing characteristics and specifications are outlined in AC Characteristics.

Start and Stop Conditions

Start Condition: A Start condition occurs when there is a high-to-low transition on the SDA pin while the SCL pin is at a stable logic ‘ 1 ’ state and will bring the device out of Standby mode. The master uses a Start condition to initiate any data transfer sequence; therefore, every command must begin with a Start condition. The device will continuously monitor the SDA and SCL pins for a Start condition but will not respond unless one is detected. Refer to Figure 2 for more details.

Stop Condition: A Stop condition occurs when there is a low-to-high transition on the SDA pin while the SCL pin is stable in the logic ‘ 1 ’ state.The master can use the Stop condition to end a data transfer sequence with the AT24C32D, which will subsequently return to Standby mode. The master can also utilize a repeated Start condition instead of a Stop condition to end the current data transfer if the master will perform another operation. Refer to Figure 2 for more details.

Acknowledge and No-Acknowledge

After every byte of data is received, the receiving device must confirm to the transmitting device that it has successfully received the data byte by responding with what is known as an Acknowledge (ACK). An ACK is accomplished by the transmitting device first releasing the SDA line at the falling edge of the eighth clock cycle followed by the receiving device responding with a logic ‘ 0 ’ during the entire high period of the ninth clock cycle.

When the AT24C32D is transmitting data to the master, the master can indicate that it is done receiving data and wants to end the operation by sending a logic ‘1’ response to the AT24C32D instead of an ACK response during the ninth clock cycle. This is known as a No-Acknowledge (NACK) and is accomplished by the master sending a logic ‘1’ during the ninth clock cycle, at which point the AT24C32D will release the SDA line so the master can then generate a Stop condition.
The transmitting device, which can be the bus master or the Serial EEPROM, must release the SDA line at the falling edge of the eighth clock cycle to allow the receiving device to drive the SDA line to a logic ‘0’ to ACK the previous 8?bit word. The receiving device must release the SDA line at the end of the ninth
clock cycle to allow the transmitter to continue sending new data. A timing diagram has been provided in Figure 2 to better illustrate these requirements.

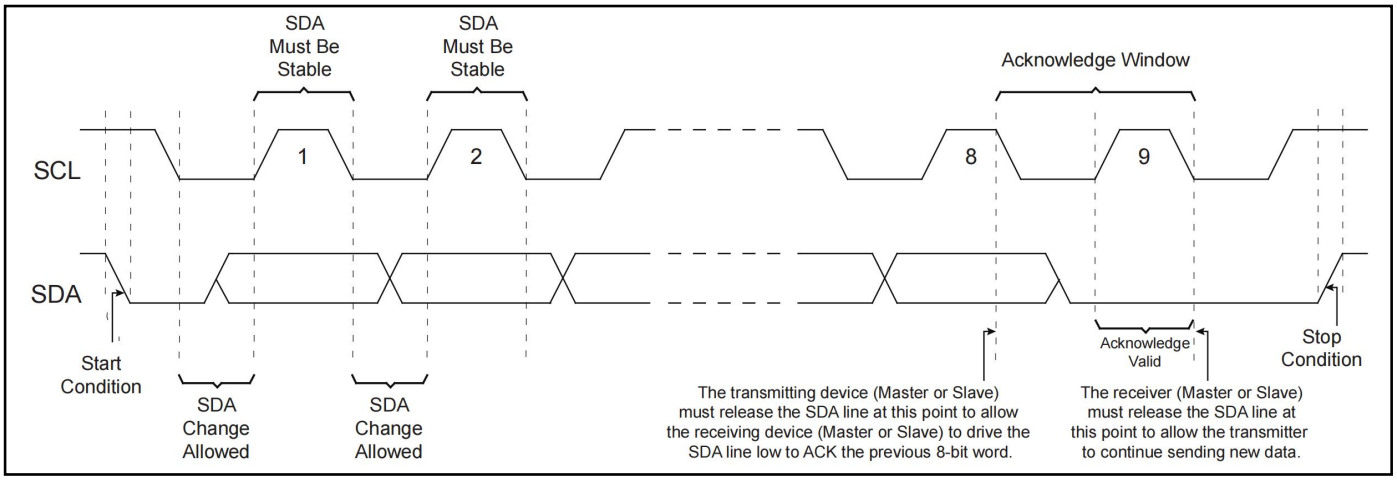

Figure 2.Start Condition, Data Transitions, Stop Condition and Acknowledge

Standby Mode

The AT24C32D features a low-power Standby mode that is enabled when any one of the following occurs:

- A valid power-up sequence is performed (see Power-up Requirements and Reset Behavior).
- A Stop condition is received by the device unless it initiates an internal write cycle (see Write Operations).
- At the completion of an internal write cycle (see Write Operations).

Software Reset

After an interruption in protocol, power loss or system Reset, any 2-wire device can be protocol reset by clocking SCL until SDA is released by the EEPROM and goes high. The number of clock cycles until SDA is released by the EEPROM will vary. The software Reset sequence should not take more than nine dummy clock cycles. Once the software Reset sequence is complete, new protocol can be sent to the device by sending a Start condition followed by the protocol. Refer to Figure 3 for an illustration.
In the event that the device is still non-responsive or remains active on the SDA bus, a power cycle must be used to reset the device (see Power-up Requirements and Reset Behavior).

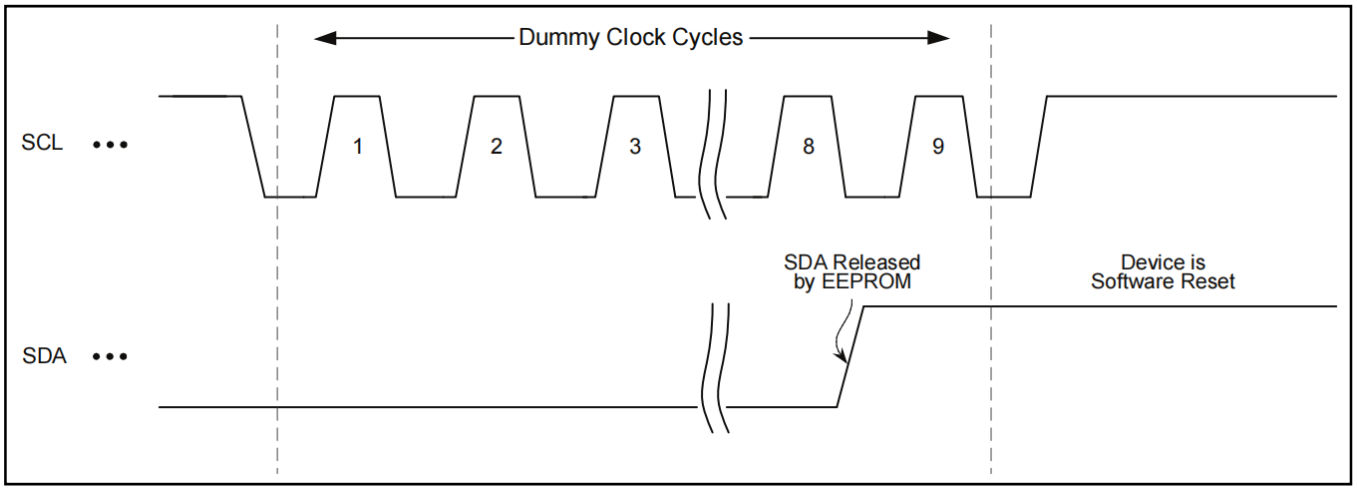

Figure 3.Software Reset

Memory Organization

The AT24C32D is internally organized as 128 pages of 32 bytes each.

Device Addressing

Accessing the device requires an 8-bit device address byte following a Start condition to enable the device for a read or write operation. Since multiple slave devices can reside on the serial bus, each slave device must have its own unique address so the master can access each device independently.
The Most Significant four bits of the device address byte is referred to as the device type identifier. The device type identifier ‘1010’(Ah) is required in bits 7 through 4 of the device address byte (see Table 9).
Following the 4-bit device type identifier are the hardware slave address bits, A2, A1 and A0. These bits can be used to expand the address space by allowing up to eight Serial EEPROM devices on the same bus. These hardware slave address bits must correlate with the voltage level on the corresponding hardwired device address input pins A0, A1 and A2. The A0, A1 and A2 pins use an internal proprietary circuit that automatically biases the pin to a logic ‘0’ state if the pin is allowed to float. In order to operate in a wide variety of application environments, the pull-down

mechanism is intentionally designed to be somewhat strong. Once the pin is biased above the CMOS input buffer's trip point (~0.5 x Vcc), the pull-down mechanism disengages. TUDI recommends connecting the A0, A1 and A2 pins to a known state whenever possible.
When utilizing the SOT23 package, the A2, A1 and A0 pins are not accessible and are left floating. The previously mentioned automatic pull-down circuit will set this pin to a logic ‘ 0 ’ state. As a result, to properly communicate with the device in the SOT23 package, the A2, A1 and A0 software bits must always be set to logic ‘ 0 ’ for any operation. Refer to Table 9 to review these bit positions.
The eighth bit (bit 0) of the device address byte is the Read/Write Select bit. A read operation is initiated if this bit is high and a write operation is initiated if this bit is low.
Upon the successful comparison of the device address byte, the AT24C32D will return an ACK. If a valid comparison is not made, the device will NACK.

Table 9.Device Addressing

Package	Device Type Identifier				Hardware Slave Address Bits			RW Select
	Bit 7	Bit 6	Bit 5	Bit 4	Bit 3	Bit 2	Bit 1	Bit 0
SOIC,TSSOP	1	0	1	0	A2	A1	A0	R/W
SOT23	1	0	1	0	0	0	0	R/W

For all operations except the current address read, two 8-bit word address bytes must be transmitted to the device immediately following the device address byte. The word address bytes consist of the 12-bit memory array word address, and are used to specify which byte location in the EEPROM to start reading or writing.

The first word address byte contains the four Most Significant bits of the word address (A11 through A8) in bit positions three through zero, as seen in Table 10. Bit 7 through bit 4 of the first word address are “ don't care ” bits as they are outside of the addressable 32-Kbit range. Upon completion of the first word address byte, the AT24C32D will return an ACK.

Table 10.First Word Address Byte

Bit 7	Bit 6	Bit 5	Bit 4	Bit 3	Bit 2	Bit 1	Bit 0
X	X	X	X	A11	A10	A9	A8

Next, the second word address byte is sent to the device which provides the remaining eight bits of the word address (A7 through A0). Upon completion of the second word address byte, the AT24C32D will return an ACK. See Table 11 to review these bit positions.

Table 11.Second Word Address Byte

Bit 7	Bit 6	Bit 5	Bit 4	Bit 3	Bit 2	Bit 1	Bit 0
A7	A6	A5	A4	A3	A2	A1	A0

Write Operations

All write operations for the AT24C32D begin with the master sending a Start condition, followed by a device address byte with the R/W bit set to logic ‘ 0 ’, and then by the word address bytes. The data value(s) to be written to the device immediately follow the word address bytes.

Byte Write

The AT24C32D supports the writing of a single 8-bit byte. Selecting a data word in the AT24C32D requires a 12-bit word address.

Upon receipt of the proper device address and the word address bytes, the EEPROM will send an Acknowledge. The device will then be ready to receive the 8-bit data word. Following receipt of the 8-bit data word, the EEPROM will respond with an ACK. The addressing device, such as a bus master, must then terminate the write operation with a Stop condition. At that time, the EEPROM will enter an internally self-timed write cycle, which will be completed within t_{WR}, while the data word is being programmed into the nonvolatile EEPROM. All inputs are disabled during this write cycle, and the EEPROM will not respond until the write is complete.

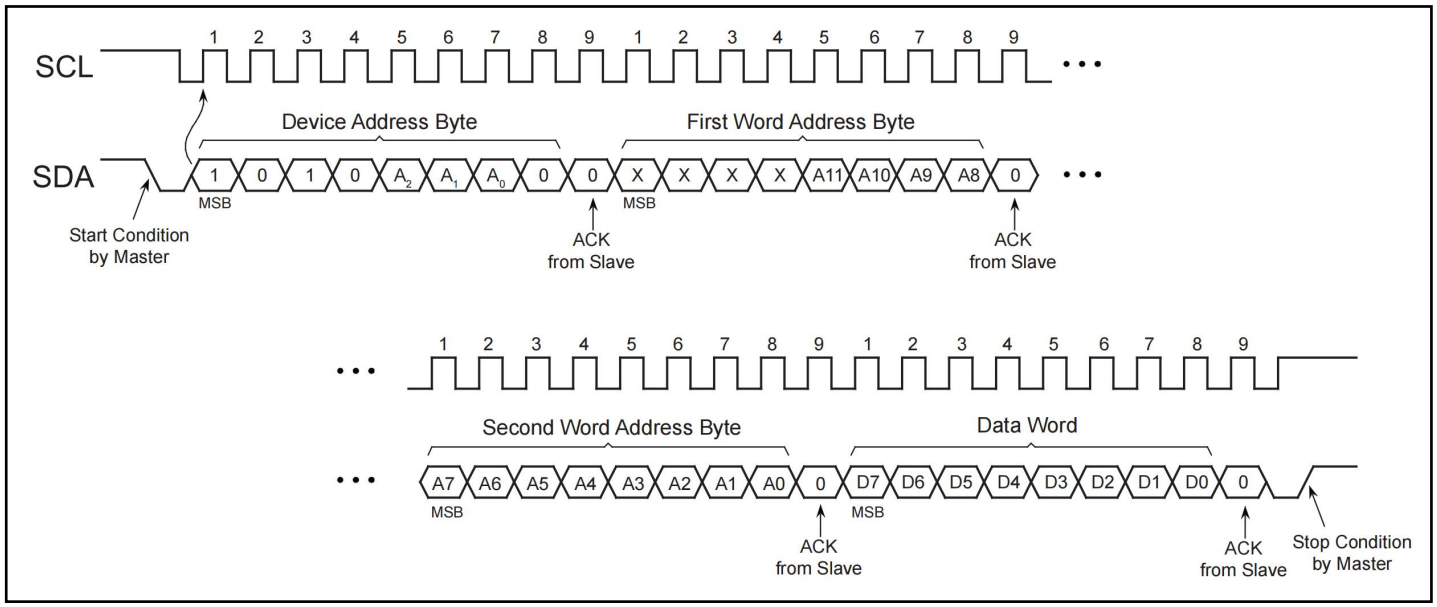

Figure 4.Byte Write

Page Write

A page write operation allows up to 32 bytes to be written in the same write cycle, provided all bytes are in the same row of the memory array (where address bits A11 throught A5 are the same). Partial page writes of less than 32 bytes are also allowed.
A page write is initiated the same way as a byte write, but the bus master does not send a Stop condition after the first data word is clocked in. Instead, after the EEPROM acknowledges receipt of the first data word, the bus master can transmit up to thirty one additional data words. The EEPROM will respond with an ACK after each data word is received. Once all data to be written has been sent to the device, the bus master must issue a Stop condition (see Figure 5) at which time the internally self-timed write cycle will begin.
The lower five bits of the word address are internally incremented following the receipt of each data word. The higher order address bits are not incremented and retain the memory page row location. Page write operations are limited to writing bytes within a single physical page, regardless of the number of bytes actually being written. When the incremented word address reaches the page boundary, the address counter will roll-over to the beginning of the same page. Nevertheless, creating a roll-over event should be avoided as previously loaded data in the page could become unintentionally altered.

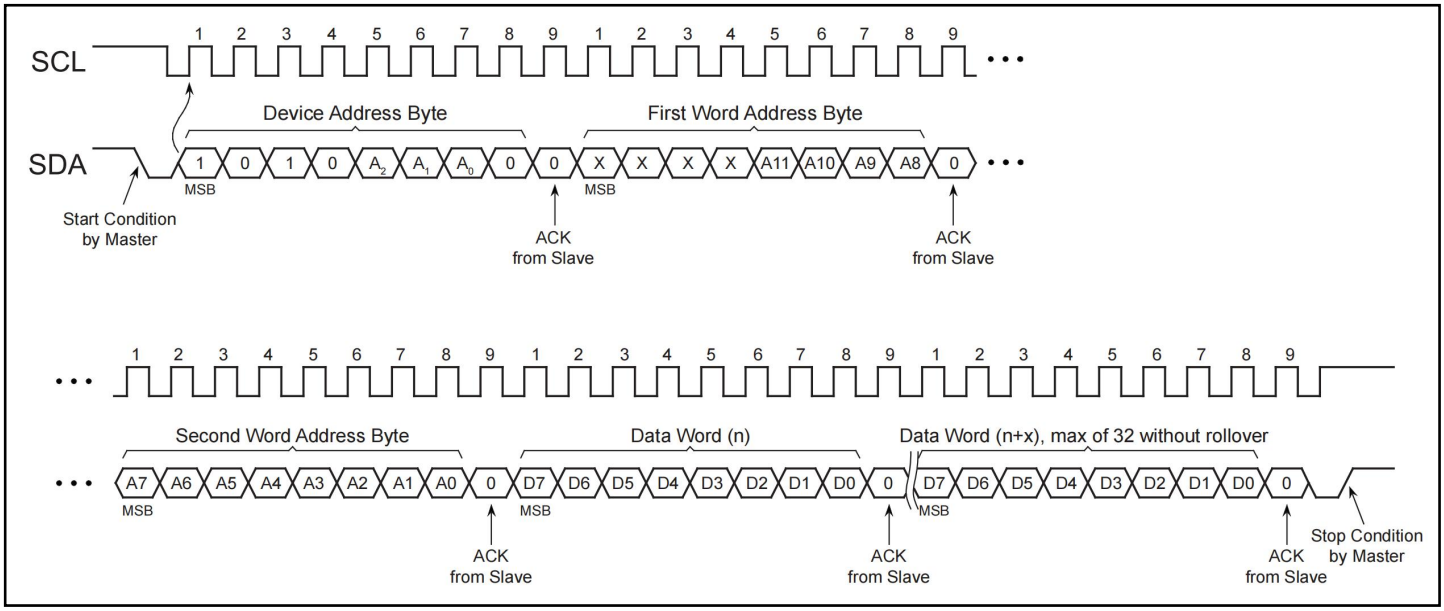

Figure 5.Page Write

Acknowledge Polling

An Acknowledge Polling routine can be implemented to optimize time-sensitive applications that would prefer not to wait the fixed maximum write cycle time (t_{WR}). This method allows the application to know immediately when the Serial EEPROM write cycle has completed, so a subsequent operation can be started.

Once the internally self-timed write cycle has started, an Acknowledge Polling routine can be initiated. This involves repeatedly sending a Start condition followed by a valid device address byte with the R/W bit set at logic ‘ 0 ’. The device will not respond with an ACK while the write cycle is ongoing. Once the internal write cycle has completed, the EEPROM will respond with an ACK, allowing a new read or write operation to be immediately initiated. A flowchart has been included below in Figure 6 to better illustrate this technique.

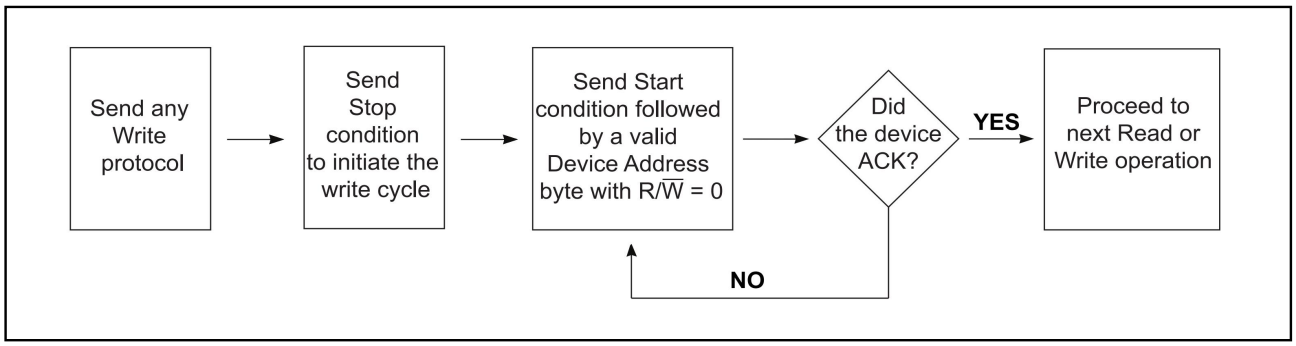

Figure 6.Acknowledge Polling Flowchart

Write Cycle Timing

The length of the self-timed write cycle (t_{WR}) is defined as the amount of time from the Stop condition that begins the internal write cycle to the Start condition of the first device address byte sent to the AT24C32D that it subsequently responds to with an ACK. Figure 7 has been included to show this measurement. During the internally self-timed write cycle, any attempts to read from or write to the memory array will not be processed.

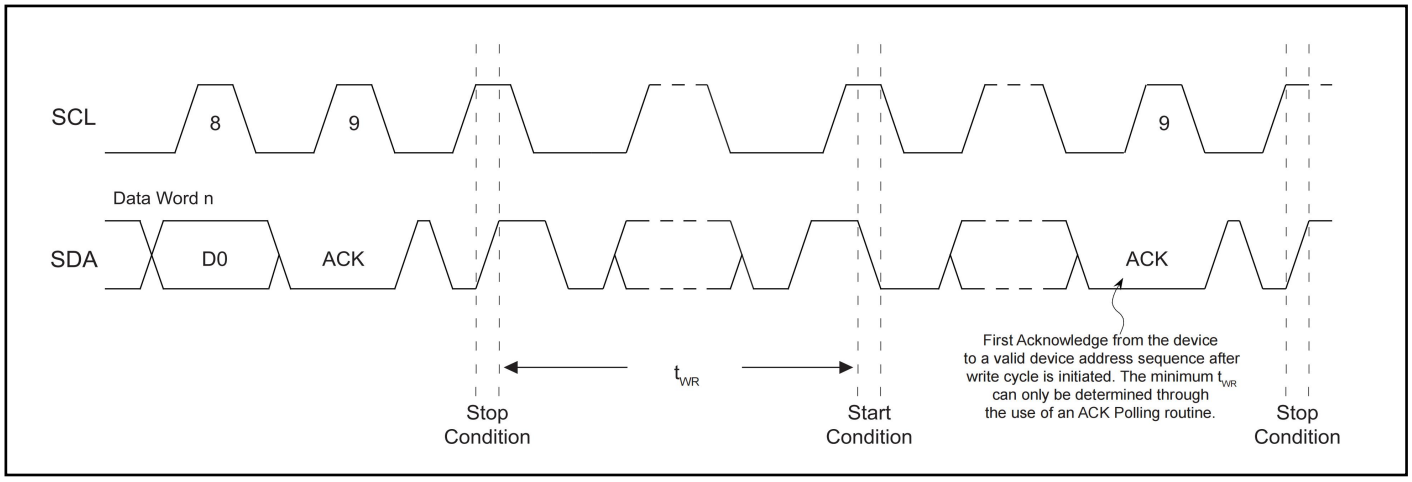

Figure 7.Write Cycle Timing

Write Protection

The AT24C32D utilizes a hardware data protection scheme that allows the user to write-protect the entire memory contents when the WP pin is at V_{CC} (or a valid V_{IH}). No write protection will be set if the WP pin is at GND or left floating.

Table 12.AT24C32D Write-Protect Behavior

WP Pin Voltage	Part of the Array Protected
V_{CC}	FullArray
GND	None -Write Protection Not Enabled

The status of the WP pin is sampled at the Stop condition for every byte write or page write operation prior to the start of an internally self-timed write cycle. Changing the WP pin state after the Stop condition has been sent will not alter or interrupt the execution of the write cycle. If an attempt is made to write to the device while the WP pin has been asserted, the device will acknowledge the device address, word address and data bytes, but no write cycle will occur when the Stop condition is issued. The device will immediately be ready to accept a new read or write command.

Read Operations

Read operations are initiated the same way as write operations with the exception that the Read/ Write Select bit in the device address byte must be a logic ‘1’. There are three read operations:

- Current Address Read
- Random Address Read
- Sequential Read

Current Address Read

The internal data word address counter maintains the last address accessed during the last read or write operation, incremented by one. This address stays valid between operations as long the V_{CC} is maintained to the part. The address roll-over during a read is from the last byte of the last page to the first byte of the first page of the memory.

A current address read operation will output data according to the location of the internal data word address counter. This is initiated with a Start condition, followed by a valid device address byte with the R/W bit set to logic ‘1’. The device will ACK this sequence and the current address data word is serially clocked out on the SDA line. All types of read operations will be terminated if the bus master does not respond with an ACK (it NACKs) during the ninth clock cycle. After the NACK response, the master may send a Stop condition to complete the protocol, or it can send a Start condition to begin the next sequence.

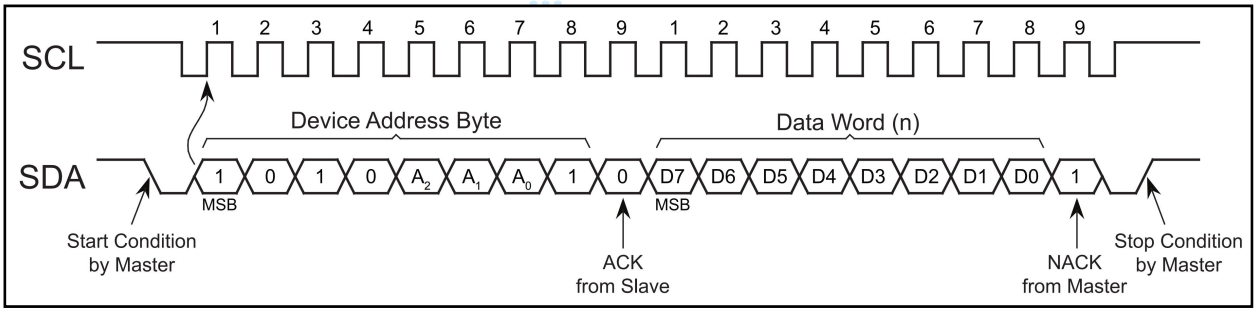

Figure 8.Current Address Read

Random Read

A random read begins in the same way as a byte write operation does to load in a new data word address. This is known as a “ dummy write ” sequence; however, the data byte and the Stop condition of the byte write must be omitted to prevent the part from entering an internal write cycle. Once the device address and word address are clocked in and acknowledged by the EEPROM, the bus master must generate another Start condition. The bus master now initiates a current address read by sending a Start condition, followed by a valid device address byte with the R/W bit set to logic ‘ 1 ’. The EEPROM will ACK the device address and serially clock out the data word on the SDA line. All types of read operations will be terminated if the bus master does not respond with an ACK (it NACKs) during the ninth clock cycle. After the NACK response, the master may send a Stop condition to complete the protocol, or it can send a Start condition to begin the next sequence.

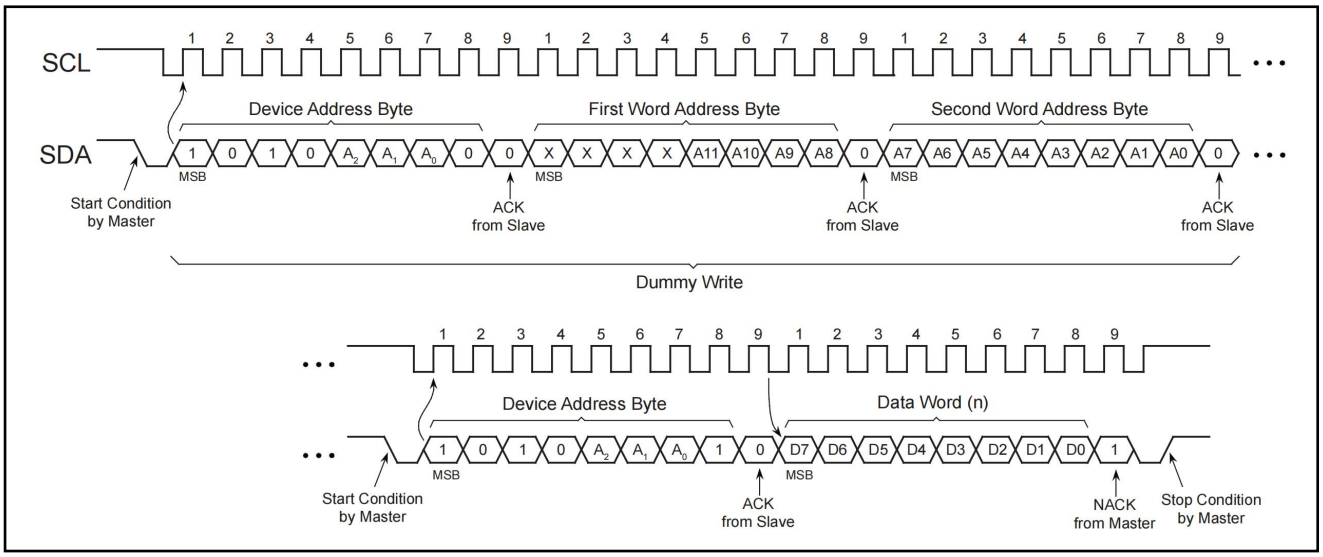

Figure 9.Random Read

Sequential Read

Sequential reads are initiated by either a current address read or a random read. After the bus master receives a data word, it responds with an Acknowledge. As long as the EEPROM receives an ACK, it will continue to increment the word address and serially clock out sequential data words. When the maximum memory address is reached, the data word address will roll-over and the sequential read will continue from the beginning of the memory array. All types of read operations will be terminated if the bus master does not respond with an ACK (it NACKs) during the ninth clock cycle. After the NACK response, the master may send a Stop condition to complete the protocol, or it can send a Start condition to begin the next sequence.

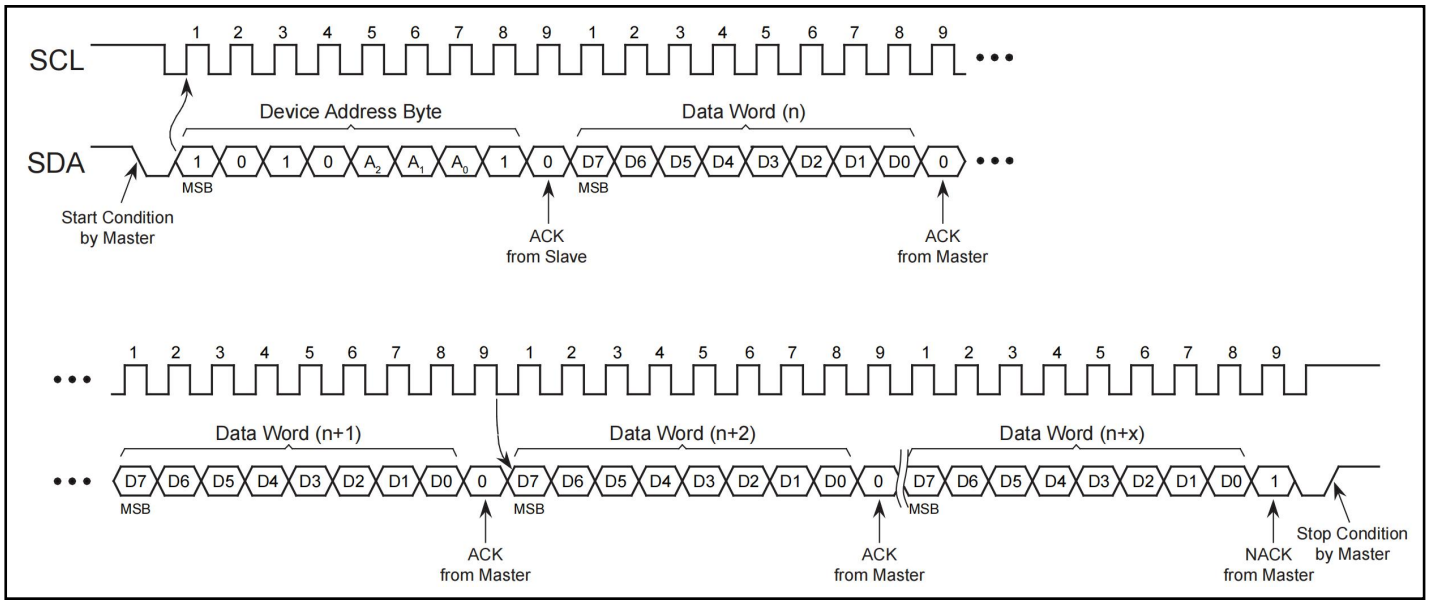

Figure10.Sequential Read

Device Default Condition from TUDI

The AT24C32D is delivered with the EEPROM array set to logic ‘ 1 ’, resulting in FFh data in all locations.

Order information

Order Number	Package	Package Quantity	Marking On The park	Temperature
AT24C32D-XHM-T-TUDI	TSSOP8	Tape,Reel,4000	24C32D	-40℃ to 85℃
			32DM	
AT24C32D-STUM-T-TUDI	SOT23	Tape,Reel,3000	BDMU	
AT24C32D-SSHM-T-TUDI	SOP8	Tape,Reel,4000	32DM	

Revision history

	Date	Revision	Page
V1.0	2020/3	New	1-13
V1.1	2024/9	Update model and PDF template	1-24

Package SOP8

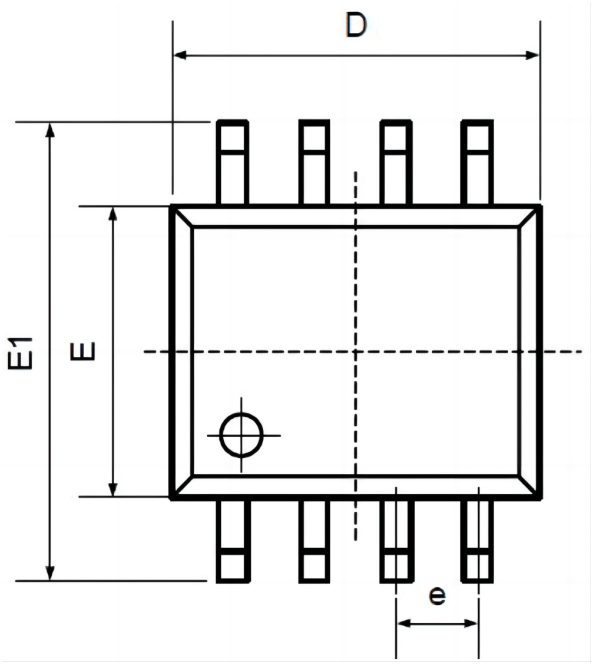

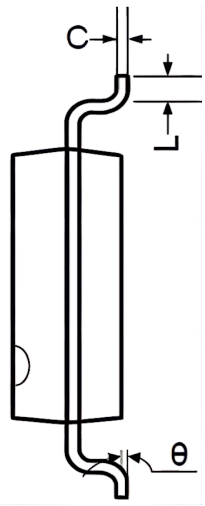

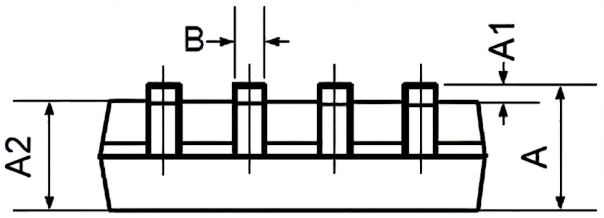

Symbol	Dimensions In Millimeters		Dimensions In Inches	
	Min	Max	Min	Max
A	1.350	1.750	0.053	0.069
A1	0.100	0.250	0.004	0.010
A2	1.350	1.550	0.053	0.061
B	0.330	0.510	0.013	0.020
C	0.190	0.250	0.007	0.010
D	4.780	5.000	0.188	0.197
E	3.800	4.000	0.150	0.157
E1	5.800	6.300	0.228	0.248
e	1.270TYP		0.050TYP	
L	0.400	1.270	0.016	0.050
θ	0°	8°	0°	8°

Package TSSOP8

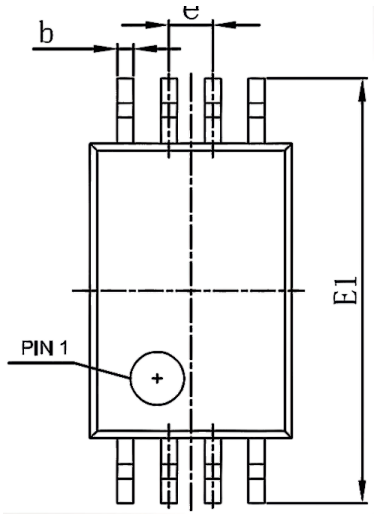

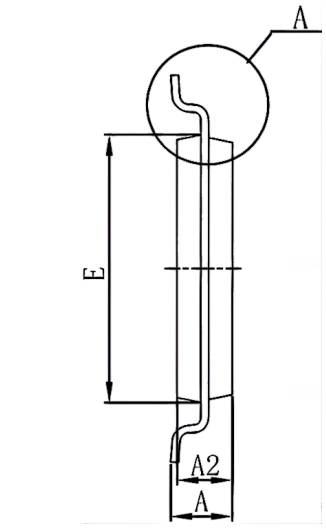

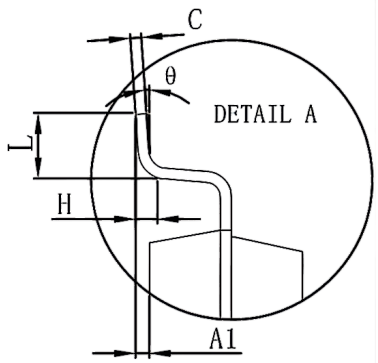

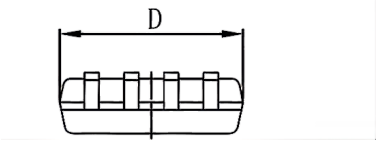

Symbol	Dimensions In Millimeters		Dimensions In Inches	
	Min	Max	Min	Max
D	2.900	3.100	0.114	0.122
E	4.300	4.500	0.169	0.177
b	0.190	0.300	0.007	0.012
C	0.090	0.200	0.004	0.008
E1	6.250	6.550	0.246	0.258
A		1.200		0.047
A2	0.800	1.000	0.031	0.039
A1	0.050	0.150	0.002	0.006
e	0.65(BSC)		0.026(BSC)	
L	0.500	0.700	0.020	0.028
H	0.25(TYP)		0.01(TYP)	
θ	1°		1°	

Package SOT23-5

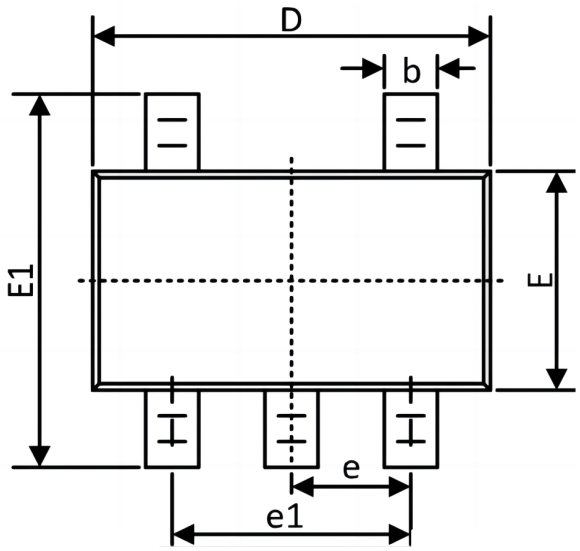

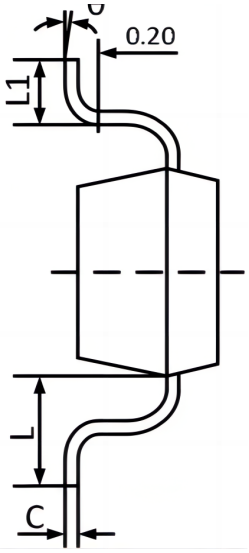

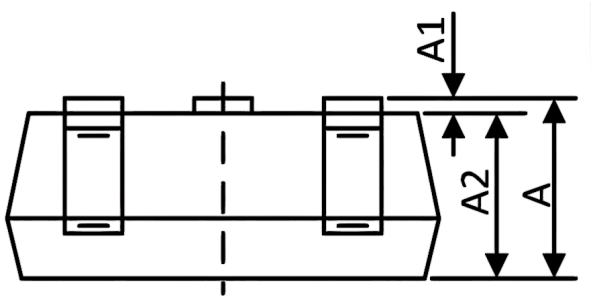

Symbol	Dimensions In Millimeters		Dimensions In Inches	
	MIN	MAX	MIN	MAX
A	1.050	1.250	0.041	0.049
A1	0.000	0.100	0.000	0.004
A2	1.050	1.150	0.041	0.045
b	0.300	0.400	0.012	0.016
C	0.100	0.200	0.004	0.008
D	2.820	3.020	0.111	0.119
E	1.500	1.700	0.059	0.067
E1	2.650	2.950	0.104	0.116
e	0.950TYP		0.037TYP	
e1	1.800	2.000	0.071	0.079
L	0.700REF		0.028REF	
L1	0.300	0.600	0.012	0.024
θ	0°	8°	0°	8°

Important statement:

●TUDI Semiconductor reserves the right to modify the product manual without prior notice! Before placing an order, customers need to confirm whether the obtained information is the latest version and verify the completeness of the relevant information.

●Any semi-guide product is subject to failure or malfunction under specified conditions. It is the buyer's responsibility to comply with safety standards when using TUDI Semiconductor products for system design and whole machine manufacturing.And take the appropriate safety measures to avoid the potential in the risk of loss of personal injury or loss of property situation!

●TUDI Semiconductor products have not been licensed for life support, military, and aerospace applications,and therefore TUDI Semiconductor is not responsible for any consequences arising from the use of this product in these areas.

●If any or all TUDI Semiconductor products (including technical data, services) described or contained in this document are subject to any applicable local export control laws and regulations, they may not be exported without an export license from the relevant authorities in accordance with such laws.

●The specifications of any and all TUDI Semiconductor products described or contained in this document specify the performance, characteristics, and functionality of said products in their standalone state, but do not guarantee the performance, characteristics, and functionality of said products installed in Customer's products or equipment. In order to verify symptoms and conditions that cannot be evaluated in a standalone device, the Customer should ultimately evaluate and test the device installed in the Customer's product device.

●TUDI Semiconductor documentation is only allowed to be copied without any alteration of the content and with the relevant authorization.TUDI Semiconductor assumes no responsibility or liability for altered documents.

●TUDI Semiconductor is committed to becoming the preferred semiconductor brand for customers, and TUDI Semiconductor will strive to provide customers with better performance and better quallity products.