

钍地半导体
Tudi Semiconductor

Product Specification

TUDI-CAT24C64

64 Kb I^2C CMOS Serial EEPROM

网址 www.sztdbdt.com

用芯智造·卓越品质

semiconductor device manufacturer

- Design
- research and development
- production
- and sales

Features

- Supports Standard, Fast and Fast-Plus I^2C Protocol
- 1.7 V to 5.5 V Supply Voltage Range
- 32-Byte Page Write Buffer
- Hardware Write Protection for Entire Memory
- Schmitt Triggers and Noise Suppression Filters on I^2C Bus Inputs (SCL and SDA)
- Low Power CMOS Technology
- 1,000,000 Program/Erase Cycles
- 100 Year Data Retention
- Industrial and Extended Temperature Range
- SOIC, TSSOP Packages
- This Device is Pb-Free, Halogen Free/BFR Free, and RoHS Compliant

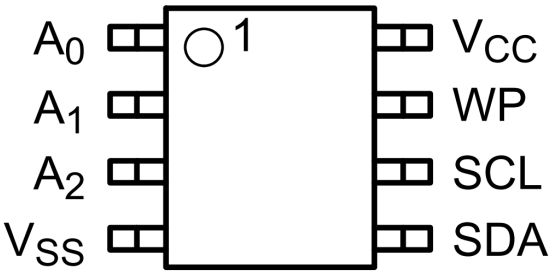

SOP8/TSSOP8

Description

The CAT24C64 is a 64 Kb CMOS Serial EEPROM device, internally organized as 8192 words of 8 bits each. It features a 32-byte page write buffer and supports the Standard (100 kHz), Fast (400 kHz) and Fast-Plus (1 MHz) I^2C protocol. External address pins make it possible to address up to eight CAT24C64 devices on the same bus.

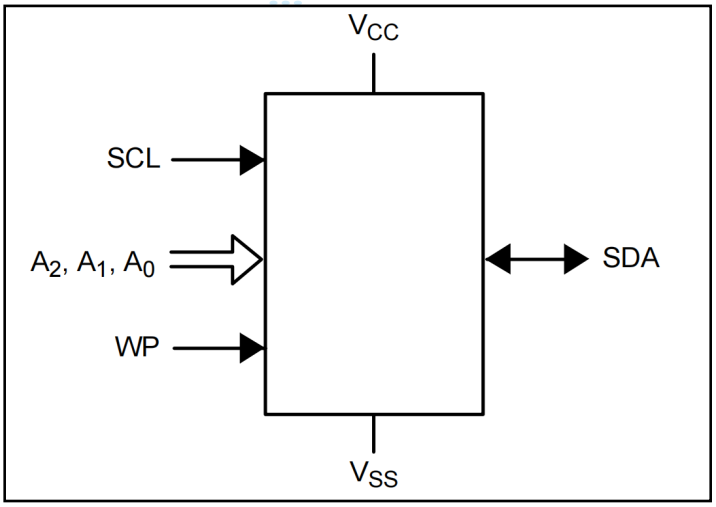

Figure 1. Functional Symbol

PIN FUNCTION

Pin Name	Function
Ao,A1,A2	Device Address
SDA	Serial Data
SCL	Serial Clock
WP	Write Protect
V_{cc}	Power Supply
V_{ss}	Ground

Table 1. ABSOLUTE MAXIMUM RATINGS

Parameters	Ratings	Units
Storage Temperature	-65 to+150	℃
Voltage on Any Pin with Respect to Ground(Note 1)	-0.5 to+6.5	V

Stresses exceeding those listed in the Maximum Ratings table may damage the device. If any of these limits are exceeded, device functionality should not be assumed, damage may occur and reliability may be affected.

1. The DC input voltage on any pin should not be lower than -0.5 V or higher than V_{CC} + 0.5 V. During transitions, the voltage on any pin may undershoot to no less than -1.5 V or overshoot to no more than V_{CC} + 1.5 V, for periods of less than 20 ns.

Table 2. RELIABILITY CHARACTERISTICS (Note 2)

Symbol	Parameter	Min	Units
N_{END} (Note 3)	Endurance	1,000,000	Program/Erase Cycles
TDR	Data Retention	100	Years

2. These parameters are tested initially and after a design or process change that affects the parameter according to appropriate AEC-Q100 and JEDEC test methods.

3. Page Mode, V_{CC} = 5 V, 25°C.

Table 3. D.C. OPERATING CHARACTERISTICS

(V_{CC} = 1.8 V to 5.5 V, T_A= -40°C to +125°C and V_{CC} = 1.7 V to 5.5 V, T_A =-40°C to +85°C, unless otherwise specified.)

Symbol	Parameter	Test Conditions		Min	Max	Units
I_{CCR}	Read Current	Read,f_{SCL}=400 kHz			1	mA
I_{CCW}	Write Current	Write,f_{SCL}=400 kHz			2	mA
I_{SB}	Standby Current	All I/O Pins at GND or V_{CC}	TA=-40℃ to +85℃ V_{CC}≤3.3V		1	μA
			TA=-40℃ to +85℃ Vcc>3.3V		3	
			TA=-40℃ to+125℃		5	
I_L	I/O Pin Leakage	Pin at GND or V_{CC}			2	μA
V_{IL}	Input Low Voltage			-0.5	V_{CC}×0.3	V
V_{IH}	Input High Voltage			V_{CC}×0.7	V_{CC}+0.5	V

Table 3. D.C. OPERATING CHARACTERISTIC (Continued)

Symbol	Parameter	Test Conditions		Min	Max	Units
V_{OL1}	Output Low Voltage	$V_{cc} \geq 2.5V, I_{OL} = 3.0$ mA			0.4	V
V_{OL2}	Output Low Voltage	$V_{cc} < 2.5V, I_{OL} = 1.0$ mA			0.2	V

Table 4. PIN IMPEDANCE CHARACTERISTICS

(V_{CC} = 1.8 V to 5.5 V, T_A= -40°C to +125°C and V_{CC} = 1.7 V to 5.5 V, T_A =-40°C to +85°C, unless otherwise specified.)

Symbol	Parameter	Conditions	Max	Units
C_{IN}(Note 4)	SDA I/O Pin Capacitance	V_{IN}=0V	8	pF
C_{IN}(Note 4)	Input Capacitance (other pins)	V_{IN}=0V	6	pF
I_{WP}(Note 5)	WP Input Current	$V_{IN} < V_{IH}, V_{cc}$=5.5V	130	μA
		$V_{IN} < V_{IH}, V_{cc}$=3.3V	120	
		$V_{IN} < V_{IH}, V_{cc}$=1.8V	80	
		$V_{IH} > VIH$	2	
I_A(Note 5)	Address Input Current (A_0,A_1,A_2)Product Rev F	$V_{IN} < V_{IH}, V_{cc}$=5.5V	50	μA
		$V_{IN} < V_{IH}, V_{cc}$=3.3V	35	
		$V_{IN} < V_{IH}, V_{cc}$=1.8V	25	
		$V_{IN} > V_{IH}$	2	

4. These parameters are tested initially and after a design or process change that affects the parameter according to appropriate AEC-Q100 and JEDEC test methods.
5. When not driven, the WP, A0, A1 and A2 pins are pulled down to GND internally. For improved noise immunity, the internal pull-down is relatively strong; therefore the external driver must be able to supply the pull-down current when attempting to drive the input HIGH. To conserve power, as the input level exceeds the trip point of the CMOS input buffer (~ 0.5 x V_{cc}), the strong pull-down reverts to a weak current source.

Table 5. A.C. CHARACTERISTICS

(V_{CC} = 1.8 V to 5.5 V, T_A = -40°C to +125°C and V_{CC} = 1.7 V to 5.5 V, T_A =-40°C to +85°C.) (Note 6)

Symbol	Parameter	Standard V_{cc}=1.7V-5.5V		Fast V_{cc}=1.7V-5.5V		Fast-Plus V_{cc}=1.7V-5.5V T_A=-40°C to +85°C		Units
		Min	Max	Min	Max	Min	Max	
F_{SCL}	Clock Frequency		100		400		1,000	kHz
$t_{HD:STA}$	START Condition Hold Time	4		0.6		0.25		μs
t_{LOW}	Low Period of SCL Clock	4.7		1.3		0.45		μs
t_{HIGH}	High Period of SCL Clock	4		0.6		0.40		μs
$t_{SU:STA}$	START Condition Setup Time	4.7		0.6		0.25		μs
$t_{HD:DAT}$	Data In Hold Time	0		0		0		μs
$t_{ZU:STA}$	Data In Setup Time	250		100		50		ns
t_R(Note 7)	SDA and SCL Rise Time		1,000		300		100	ns
t_F (Note 7)	SDA and SCL Fall Time		300		300		100	ns
$t_{SU:STO}$	STOP Condition Setup Time	4		0.6		0.25		μs
t_{BUF}	Bus Free Time Between STOP and START	4.7		1.3		0.5		μs
t_{AA}	SCL Low to Data Out Valid		3.5		0.9		0.40	μs
t_{DH}	Data Out Hold Time	100		100		50		ns
T_i(Note 7)	Noise Pulse Filtered at SCLand SDA Inputs		100		100		100	ns
$t_{SU:WP}$	WP Setup Time	0		0		0		μs
$t_{HD:WP}$	WP Hold Time	2.5		2.5		1		μs
t_{WR}	Write Cycle Time		5		5		5	ms
t_{PU} (Notes 7,8)	Power-up to Ready Mode		1		1	0.1	1	ms

Product parametric performance is indicated in the Electrical Characteristics for the listed test conditions, unless otherwise noted. Product performance may not be indicated by the Electrical Characteristics if operated under different conditions.

6. Test conditions according to “ A.C. Test Conditions ” table.
7. Tested initially and after a design or process change that affects this parameter.
8. tPU is the delay between the time V_{CC} is stable and the device is ready to accept commands.

Table 6. A.C. TEST CONDITIONS

Input Levels	Input Rise and Fall Times	Input Reference Levels	Output Reference Levels	Output Load
0.2×V_{CC} to 0.8×V_{CC}	≤50 ns	0.3×V_{CC},0.7×V_{CC}	0.5×Vcc	Current Source: I_{OL}=3 mA (V_{CC} ≥ 2.5 V); I_{OL}=1mA (V_{CC} < 2.5 V); C_L=100 pF

Power-On Reset (POR)

Each CAT24C64 incorporates Power-On Reset (POR) circuitry which protects the internal logic against powering up in the wrong state. The device will power up into Standby mode after V_{CC} exceeds the POR trigger level and will power down into Reset mode when V_{CC} drops below the POR trigger level. This bi-directional POR behavior protects the device against ‘brown-out’ failure following a temporary loss of power.

Pin Description

SCL: The Serial Clock input pin accepts the clock signal generated by the Master. SDA: The Serial Data I/O pin accepts input data and delivers output data. In transmit mode, this pin is open drain. Data is acquired on the positive edge, and is delivered on the negative edge of SCL.
A_0, A_1 and A_2: The Address inputs set the device address that must be matched by the corresponding Slave address bits. The Address inputs are hard-wired HIGH or LOW allowing for up to eight devices to be used (cascaded) on the same bus. When left floating, these pins are pulled LOW internally. The Address inputs are not available for use with WLCSP 4-bumps.
WP: When pulled HIGH, the Write Protect input pin inhibits all write operations. When left floating, this pin is pulled LOW internally. The WP input is not available for the WLCSP 4-bumps, therefore all write operations are allowed for the device in this package.

Functional Description

The CAT24C64 supports the Inter-Integrated Circuit (I^2C) Bus protocol. The protocol relies on the use of a Master device, which provides the clock and directs bus traffic, and Slave devices which execute requests. The CAT24C64 operates as a Slave device. Both Master and Slave can transmit or receive, but only the Master can assign those roles.

I²C Bus Protocol

The 2-wire I²C bus consists of two lines, SCL and SDA, connected to the V_{CC} supply via pull-up resistors. The Master provides the clock to the SCL line, and either the Master or the Slaves drive the SDA line. A ‘0’ is transmitted by pulling a line LOW and a ‘1’ by letting it stay HIGH. Data transfer may be initiated only when the bus is not busy (see A.C. Characteristics). During data transfer, SDA must remain stable while SCL is HIGH.

START/STOP Condition

An SDA transition while SCL is HIGH creates a START or STOP condition (Figure 2). The START consists of a HIGH to LOW SDA transition, while SCL is HIGH. Absent the START, a Slave will not respond to the Master. The STOP completes all commands, and consists of a LOW to HIGH SDA transition, while SCL is HIGH.

Device Addressing

The Master addresses a Slave by creating a START condition and then broadcasting an 8-bit Slave address. For the CAT24C64, the first four bits of the Slave address are set to 1010 (Ah); the next three bits, A2, A1 and A0, must match the logic state of the similarly named input pins. The devices in WLCSP 4-bumps respond only to the Slave Address with $A_2 A_1 A_0$ = 0(CAT24C64C4xTR) . The R/W bit tells the Slave whether the Master intends to read (1) or write (0) data (Figure 3).

Acknowledge

During the 9th clock cycle following every byte sent to the bus, the transmitter releases the SDA line, allowing the receiver to respond. The receiver then either acknowledges (ACK) by pulling SDA LOW, or does not acknowledge (NoACK) by letting SDA stay HIGH (Figure 4). Bus timing is illustrated in Figure 5.

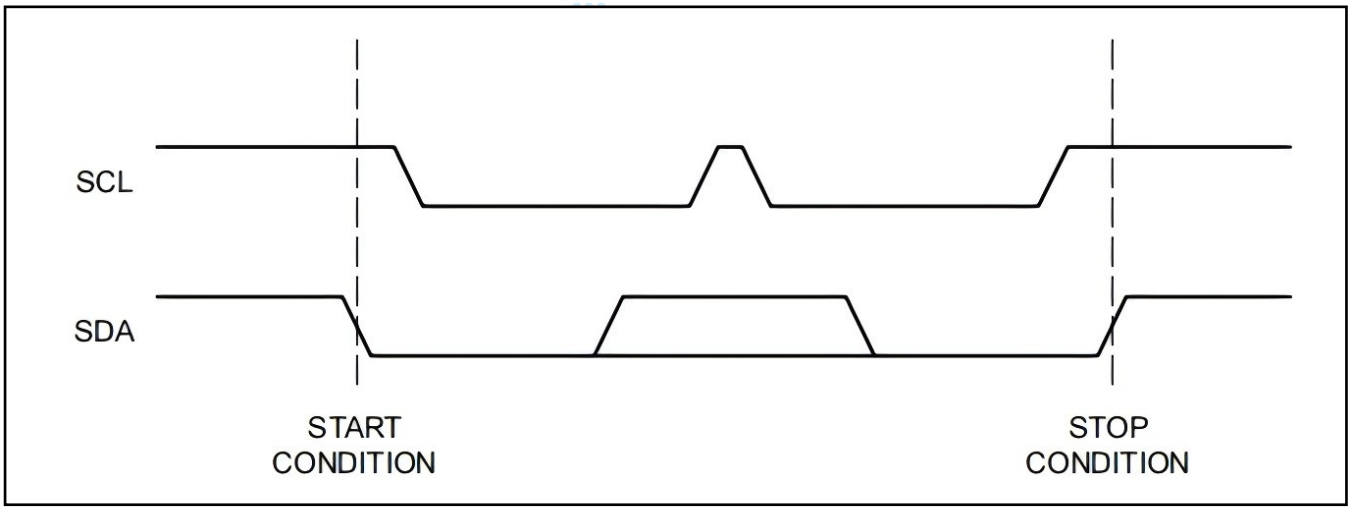

Figure 2. Start/Stop Timing

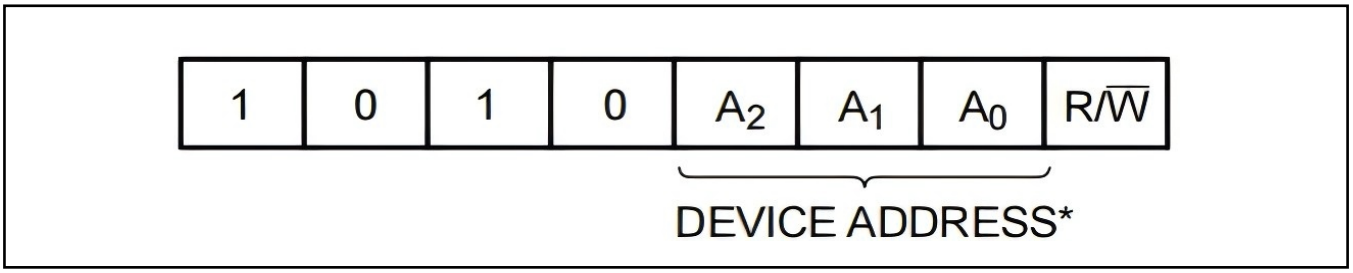

* The devices in WLCSP 4?bumps respond only to the Slave Address with: A2 A1 A0 = 000, CAT24C64C4xTR

Figure 3. Slave Address Bits

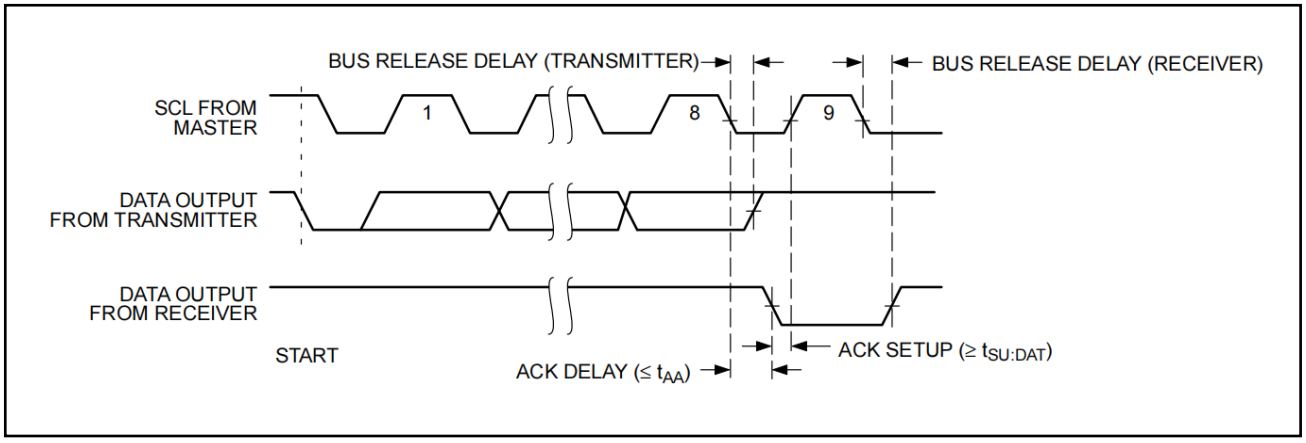

Figure 4. Acknowledge Timing

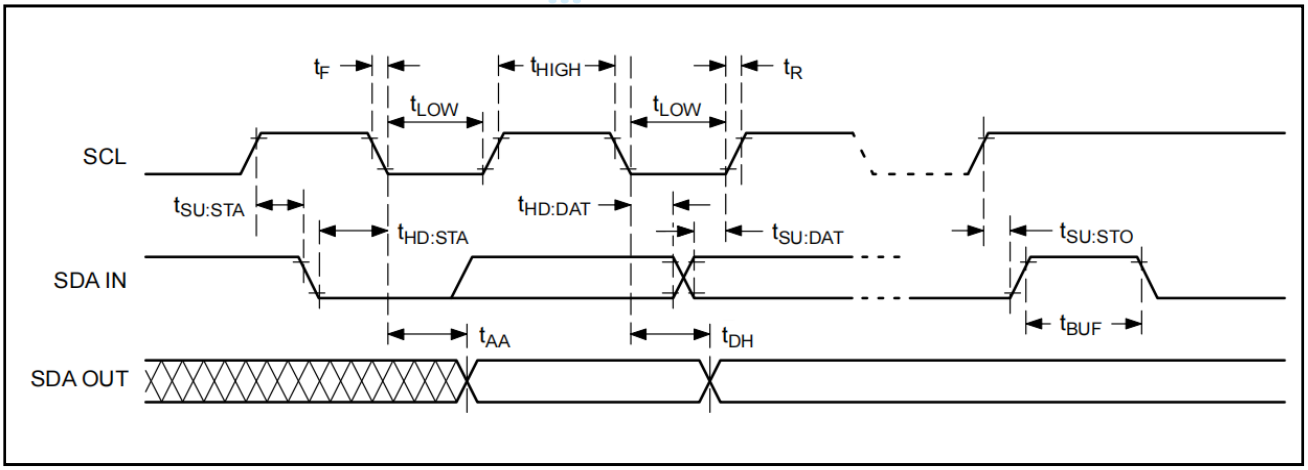

Figure 5. Bus Timing

WRITE OPERATIONS

Byte Write：To write data to memory, the Master creates a START condition on the bus and then broadcastsa Slave address with the R/W bit set to ‘0’. The Master then sends two address bytes and a data byte and concludes the session by creating a STOP condition on the bus. The Slave responds with ACK after every byte sent by the Master (Figure 6). The STOP starts the internal Write cycle, and while this operation is in progress (tWR), the SDA output is tri-stated and the Slave does not acknowledge the Master (Figure 7).

Page Write： The Byte Write operation can be expanded to Page Write, by sending more than one data byte to the Slave before issuing the STOP condition (Figure 8). Up to 32 distinct data bytes can be loaded into the internal Page Write Buffer starting at the address provided by the Master. The page address is latched, and as long as the Master keeps sending data, the internal byte address is incremented up to the end of page, where it then wraps around (within the page). New data can therefore replace data loaded earlier. Following the STOP, data loaded during thePage Write session will be written to memory in a single internal Write cycle (tWR).

Acknowledge Polling：As soon (and as long) as internal Write is in progress, the Slave will not acknowledge the Master. This feature enables the Master to immediately follow-up with a new Read or Write request, rather than wait for the maximum specified Write time (tWR) to elapse. Upon receiving a NoACK response from the Slave, the Master simply repeats the request until the Slave respondswith ACK.

Hardware Write Protection：With the WP pin held HIGH, the entire memory is protected against Write operations. If the WP pinis left floating or is grounded, it has no impact on the Write operation. The state of the WP pin is strobed on the last falling edge of SCL immediately preceding the 1st data byte (Figure 9). If the WP pin is HIGH during the strobe interval, the Slave will not acknowledge the data byte and the Write request will be rejected.

Delivery State：The CAT24C64 is shipped erased, i.e., all bytes are FFh.

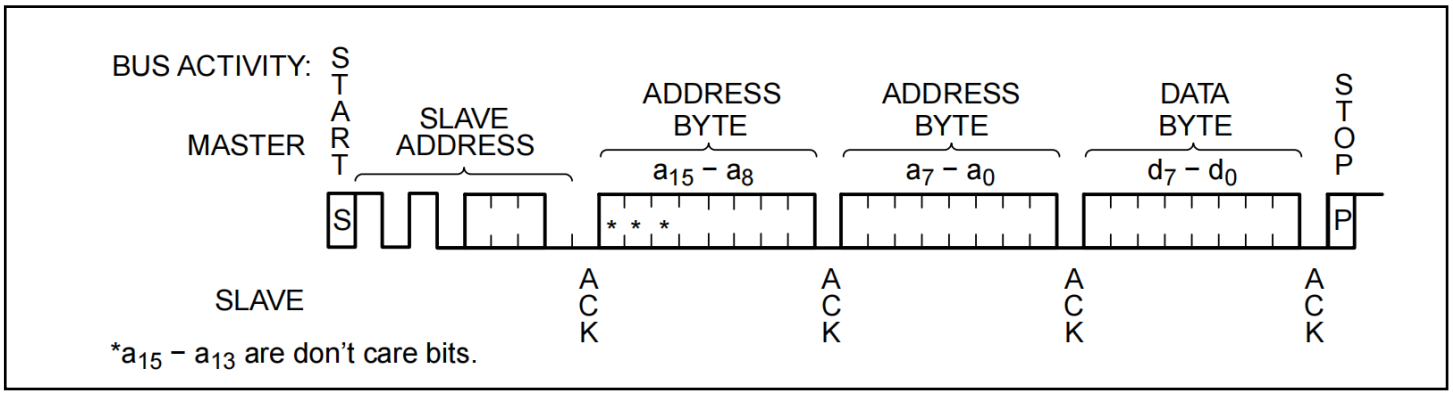

Figure 6. Byte Write Sequence

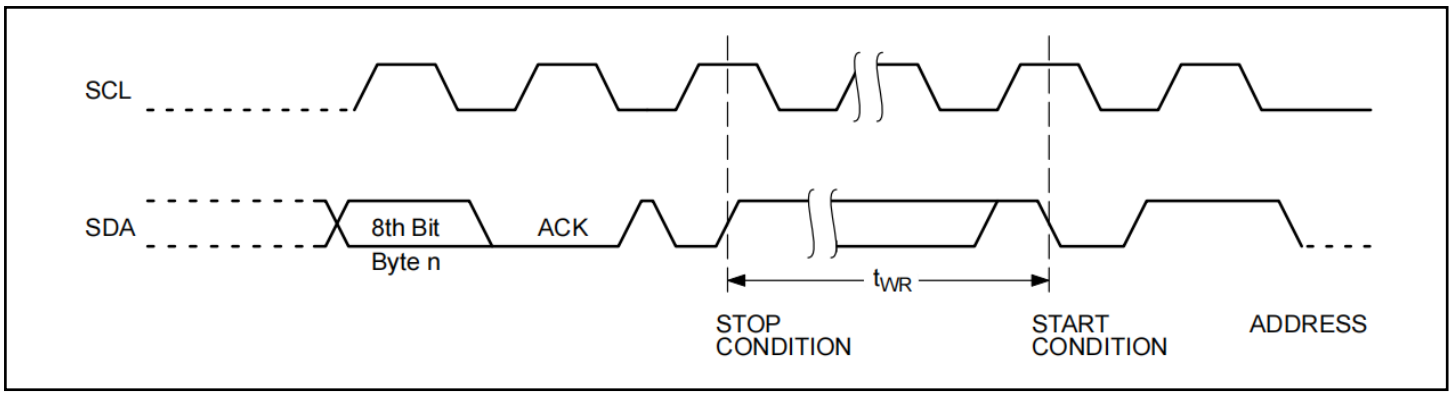

Figure 7. Write Cycle Timing

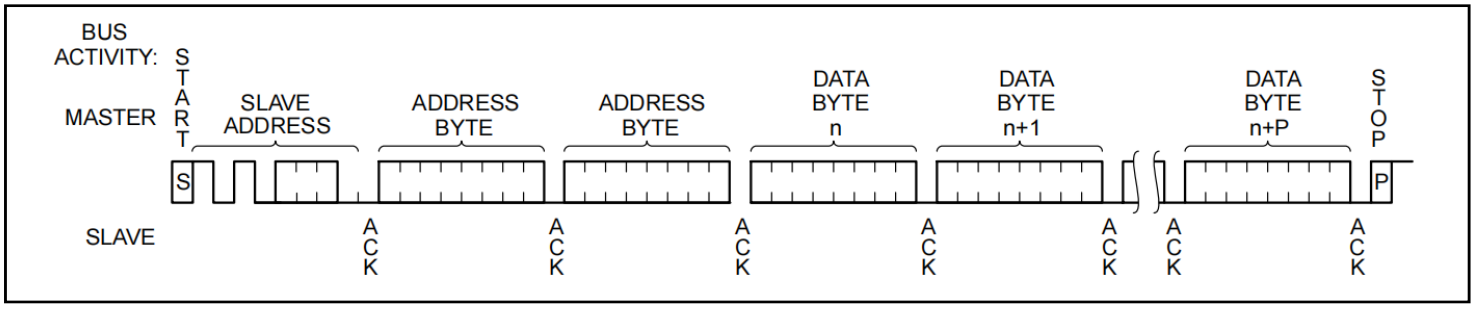

Figure 8. Page Write Sequence

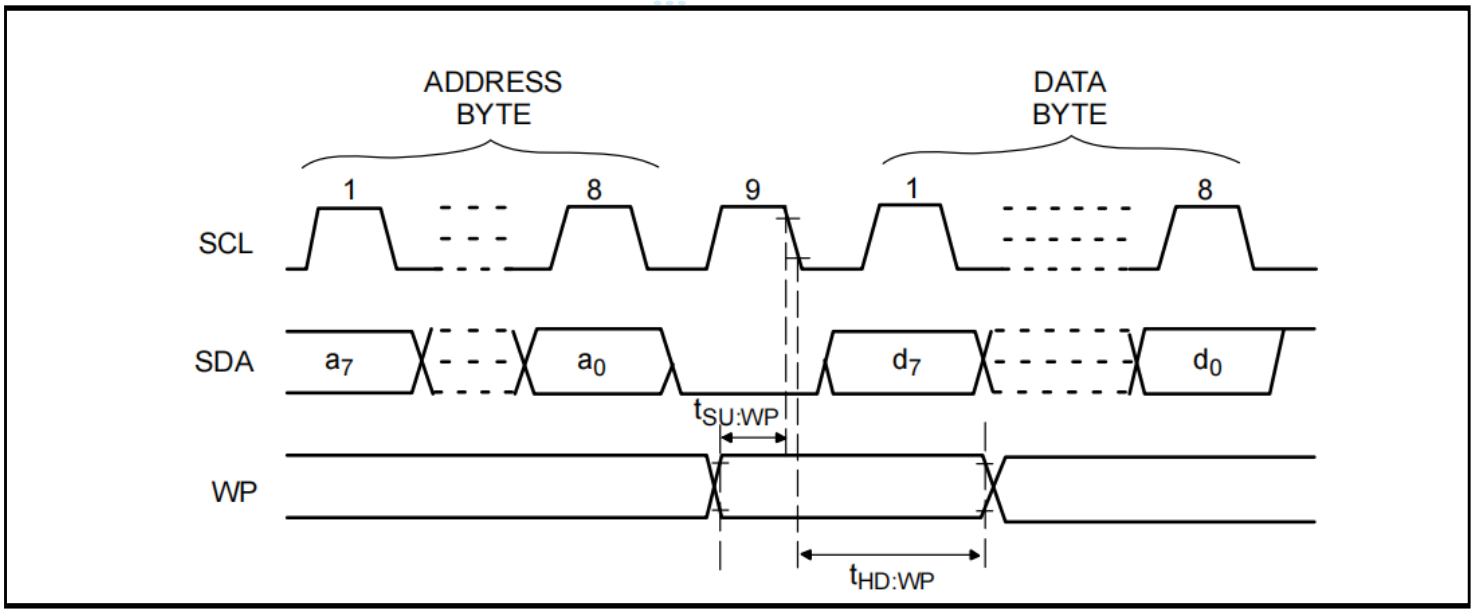

Figure 9. WP Timing

READ OPERATIONS

Immediate Read： To read data from memory, the Master creates a START condition on the bus and then broadcastsa Slave address with the R/W bit set to ‘1’. The Slave responds with ACK and starts shifting out data residing at the current address. After receiving the data, the Master responds with NoACK and terminates the session by creating a STOP condition on the bus (Figure 10). The Slave then returns to Standby mode.

Selective Read：To read data residing at a specific address, the selected address must first be loaded into the internal address register. This is done by starting a Byte Write sequence, whereby the Master creates a START condition, then broadcasts a Slave address with the R/W bit set to ‘0’ and then sends two address bytes to the Slave. Rather than completing the Byte Write sequence by sending data, the Master then creates a START condition and broadcasts a Slave address with the R/W bit set to ‘1’. The Slave responds with ACK after every byte sent by the Master and then sends out data residing at the selected address. After receiving the data, the Master responds with NoACK and then terminates the session by creating a STOP condition on the bus (Figure 11).

Sequential Read：If, after receiving data sent by the Slave, the Master responds with ACK, then the Slave will continue transmitting until the Master responds with NoACK followed by STOP (Figure 12). During Sequential Read the internal byte address is automatically incremented up to the end of memory, where it then wraps around to the beginning of memory.

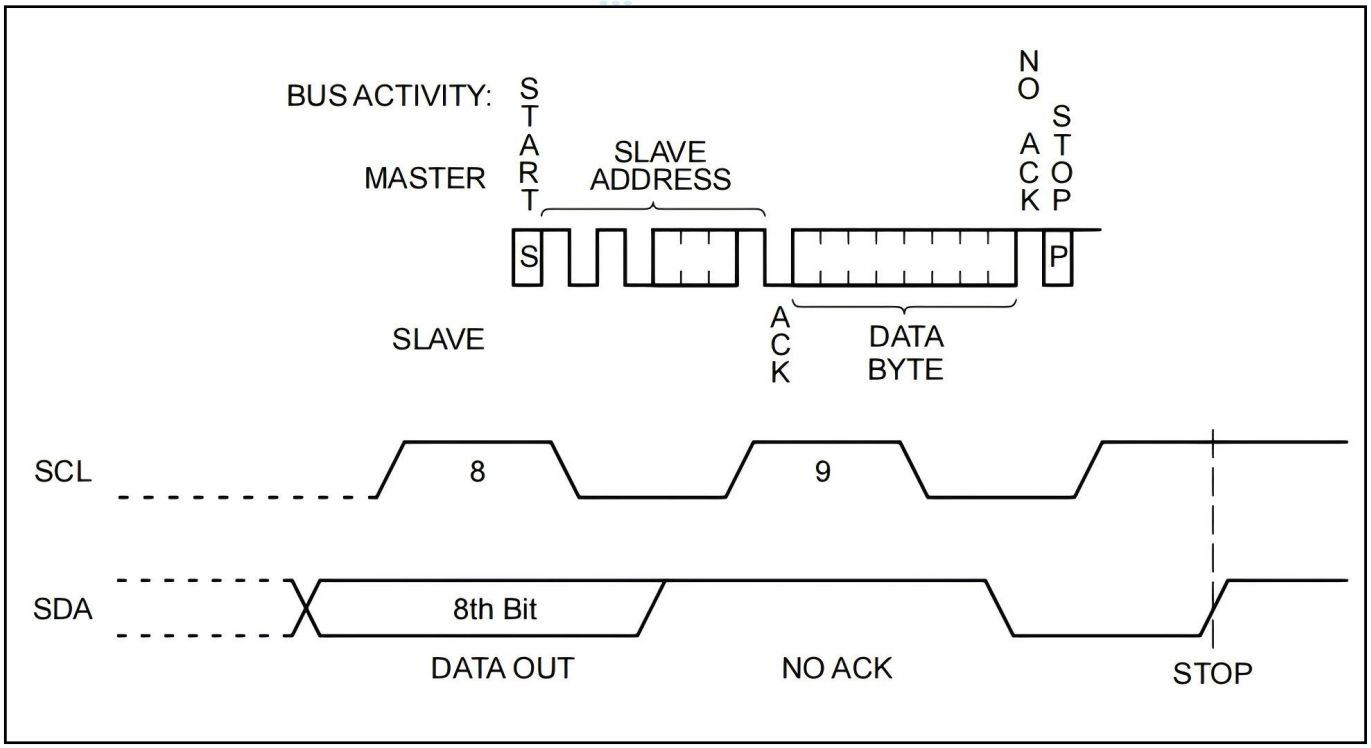

Figure 10. Immediate Read Sequence and Timing

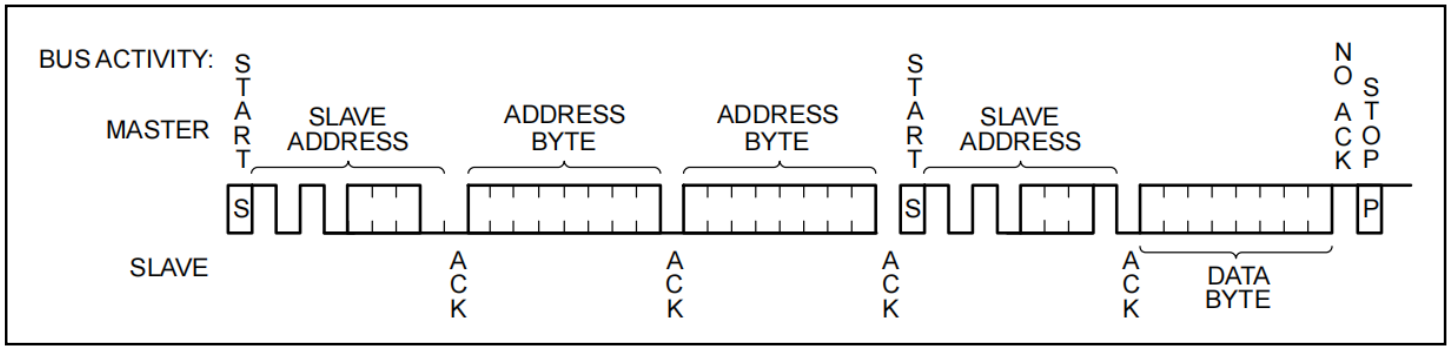

Figure 11. Selective Read Sequence

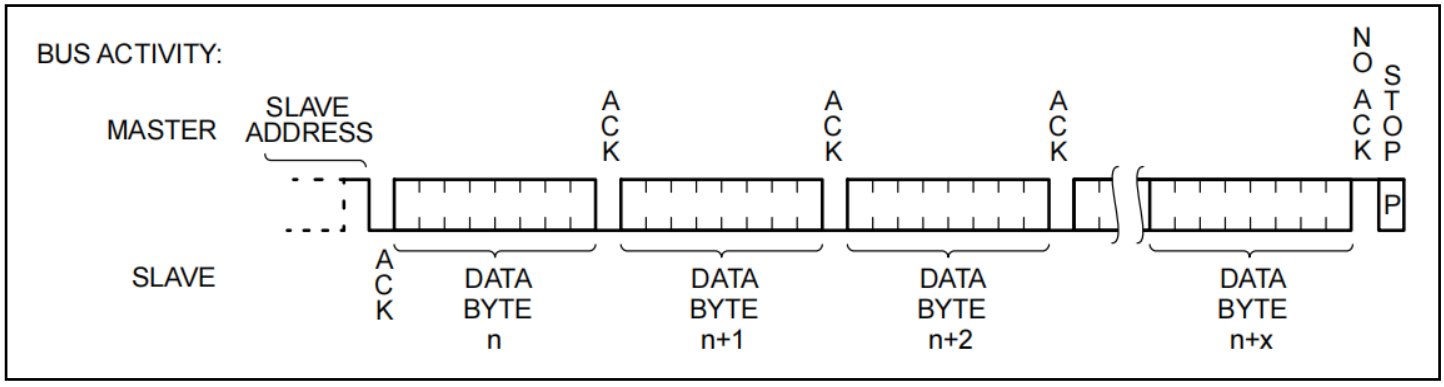

Figure 12. Sequential Read Sequence

Order information

Order Number	Package	Package Quantity	Marking On The park	Temperature
CAT24C64WI-GT3-TUDI	SOP8	Tape,Reel,4000	24C64F	-40°C to 85°C
CAT24C64YI-GT3-TUDI	TSSOP8	Tape,Reel,4000	C64F	

Revision history

	Date	Revision	Page
V1.0	2022/4	New	1-13
V1.1	2024/2	Update model and PDF template	1-17

Package SOP8

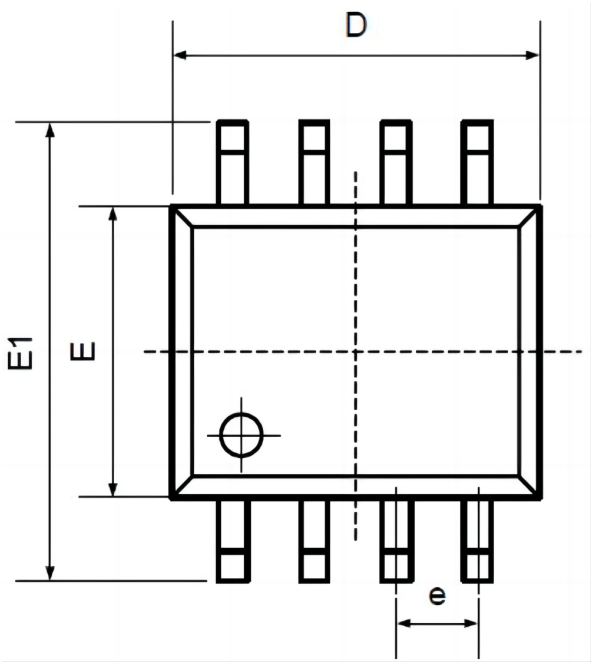

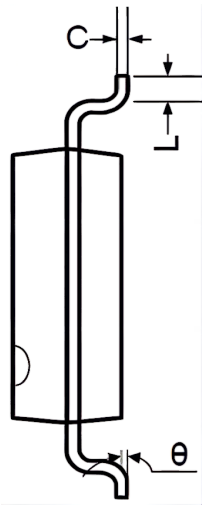

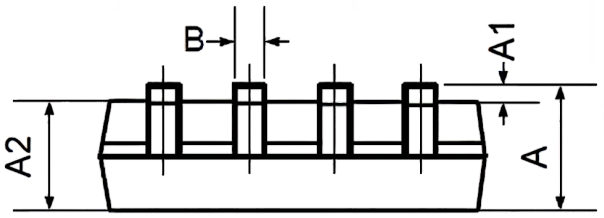

Symbol	Dimensions In Millimeters		Dimensions In Inches	
	Min	Max	Min	Max
A	1.350	1.750	0.053	0.069
A1	0.100	0.250	0.004	0.010
A2	1.350	1.550	0.053	0.061
B	0.330	0.510	0.013	0.020
C	0.190	0.250	0.007	0.010
D	4.780	5.000	0.188	0.197
E	3.800	4.000	0.150	0.157
E1	5.800	6.300	0.228	0.248
e	1.270TYP		0.050TYP	
L	0.400	1.270	0.016	0.050
θ	0°	8°	0°	8°

Package TSSOP8

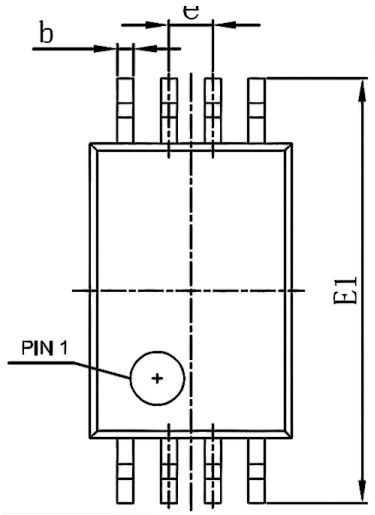

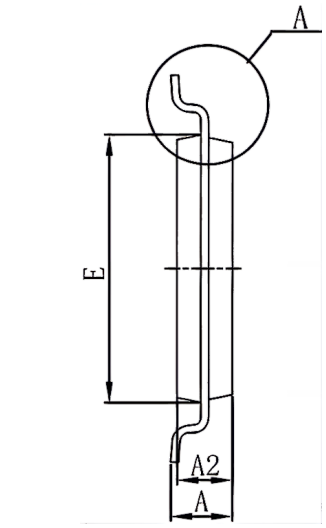

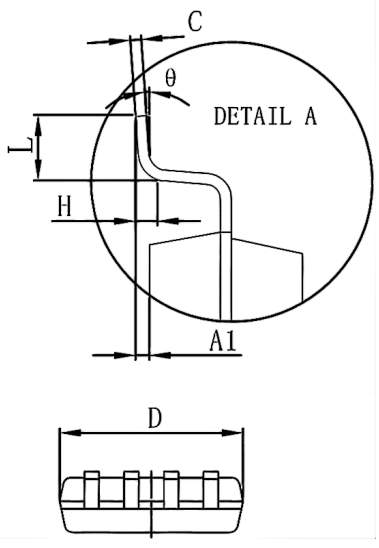

Symbol	Dimensions In Millimeters		Dimensions In Inches	
	Min	Max	Min	Max
D	2.900	3.100	0.114	0.122
E	4.300	4.500	0.169	0.177
b	0.190	0.300	0.007	0.012
C	0.090	0.200	0.004	0.008
E1	6.250	6.550	0.246	0.258
A		1.200		0.047
A2	0.800	1.000	0.031	0.039
A1	0.050	0.150	0.002	0.006
e	0.65(BSC)		0.026(BSC)	
L	0.500	0.700	0.020	0.028
H	0.25(TYP)		0.01(TYP)	
θ	1°		1°	

Important statement:

●TUDI Semiconductor reserves the right to modify the product manual without prior notice! Before placing an order, customers need to confirm whether the obtained information is the latest version and verify the completeness of the relevant information.

●Any semi-guide product is subject to failure or malfunction under specified conditions. It is the buyer's responsibility to comply with safety standards when using TUDI Semiconductor products for system design and whole machine manufacturing.And take the appropriate safety measures to avoid the potential in the risk of loss of personal injury or loss of property situation!

●TUDI Semiconductor products have not been licensed for life support, military, and aerospace applications,and therefore TUDI Semiconductor is not responsible for any consequences arising from the use of this product in these areas.

●If any or all TUDI Semiconductor products (including technical data, services) described or contained in this document are subject to any applicable local export control laws and regulations, they may not be exported without an export license from the relevant authorities in accordance with such laws.

●The specifications of any and all TUDI Semiconductor products described or contained in this document specify the performance, characteristics, and functionality of said products in their standalone state, but do not guarantee the performance, characteristics, and functionality of said products installed in Customer's products or equipment. In order to verify symptoms and conditions that cannot be evaluated in a standalone device, the Customer should ultimately evaluate and test the device installed in the Customer's product device.

●TUDI Semiconductor documentation is only allowed to be copied without any alteration of the content and with the relevant authorization.TUDI Semiconductor assumes no responsibility or liability for altered documents.

●TUDI Semiconductor is committed to becoming the preferred semiconductor brand for customers, and TUDI Semiconductor will strive to provide customers with better performance and better quallity products.