

钍地半导体
Tudi Semiconductor

Product Specification

TUDI-AT24C512B

Two-wire Serial EEPROM 512K

网址 www.sztdbdt.com

用芯智造·卓越品质

semiconductor device manufacturer

- Design
- research and development
- production
- and sales

Features

- Low-voltage and Standard-voltage Operation
  - 1.8v (V_{cc} = 1.8V to 3.6V)
  - 2.5v (V_{cc} = 2.5V to 5.5V)
- Internally Organized 65,536 x 8
- Two-wire Serial Interface
- Schmitt Triggers, Filtered Inputs for Noise Suppression
- Bidirectional Data Transfer Protocol
- 1 MHz (2.5V, 5.5V), 400 kHz (1.8V) Compatibility
- Write Protect Pin for Hardware and Software Data Protection
- 128-byte Page Write Mode (Partial Page Writes Allowed)
- Self-timed Write Cycle (5 ms Max)
- High Reliability
  - Endurance: 1,000,000 Write Cycles
  - Data Retention: 40 Years
- Lead-free/Halogen-free Devices
- 8-lead PDIP, 8-lead JEDEC SOIC, 8-lead TSSOP Packages
- Die Sales: Wafer Form, Waffle Pack and Bumped Die

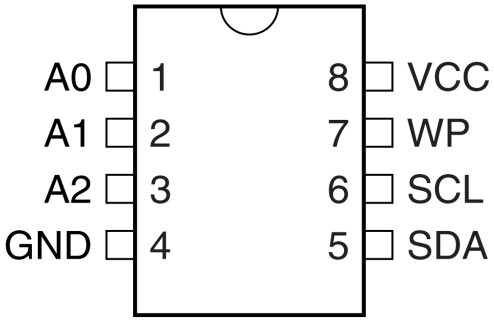

SOP8/DIP8

Description

The AT24C512B provides 524,288 bits of serial electrically erasable and programma-ble read only memory (EEPROM) organized as 65,536 words of 8 bits each. The device ’ s cascadable feature allows up to eight devices to share a common two-wire bus. The device is optimized for use in many industrial and commercial applications where low-power and low-voltage operation are essential. The devices are available in space-saving 8-pin PDIP, 8-lead JEDEC SOIC,8-lead TSSOP packages. In addition, the entire family is available in 1.8V (1.8V to 3.6V) and 2.5V (2.5V to 5.5V) versions.

Table 1. Pin Configurations

Pin Name	Function
A0-A2	Address Inputs
SDA	Serial Data
SCL	Serial Clock Input
WP	Write Protect

Absolute Maximum Ratings

Operating Temperature..... – 55°C to +125°C *
Storage Temperature ..... – 65°C to +150°C

Voltage on Any Pin
with Respect to Ground ..... – 1.0V to +7.0V
Maximum Operating Voltage 6.25V
DC Output Current..... 5.0 mA

NOTICE: Stresses beyond those listed under “ Absolute Maximum Ratings ” may cause permanent dam-age to the device. This is a stress rating only and functional operation of the device at these or any other conditions beyond those indicated in the ope rational sections of this specification is not implied.Exposure to absolute maximum rating conditions for extended periods may affect device reliability

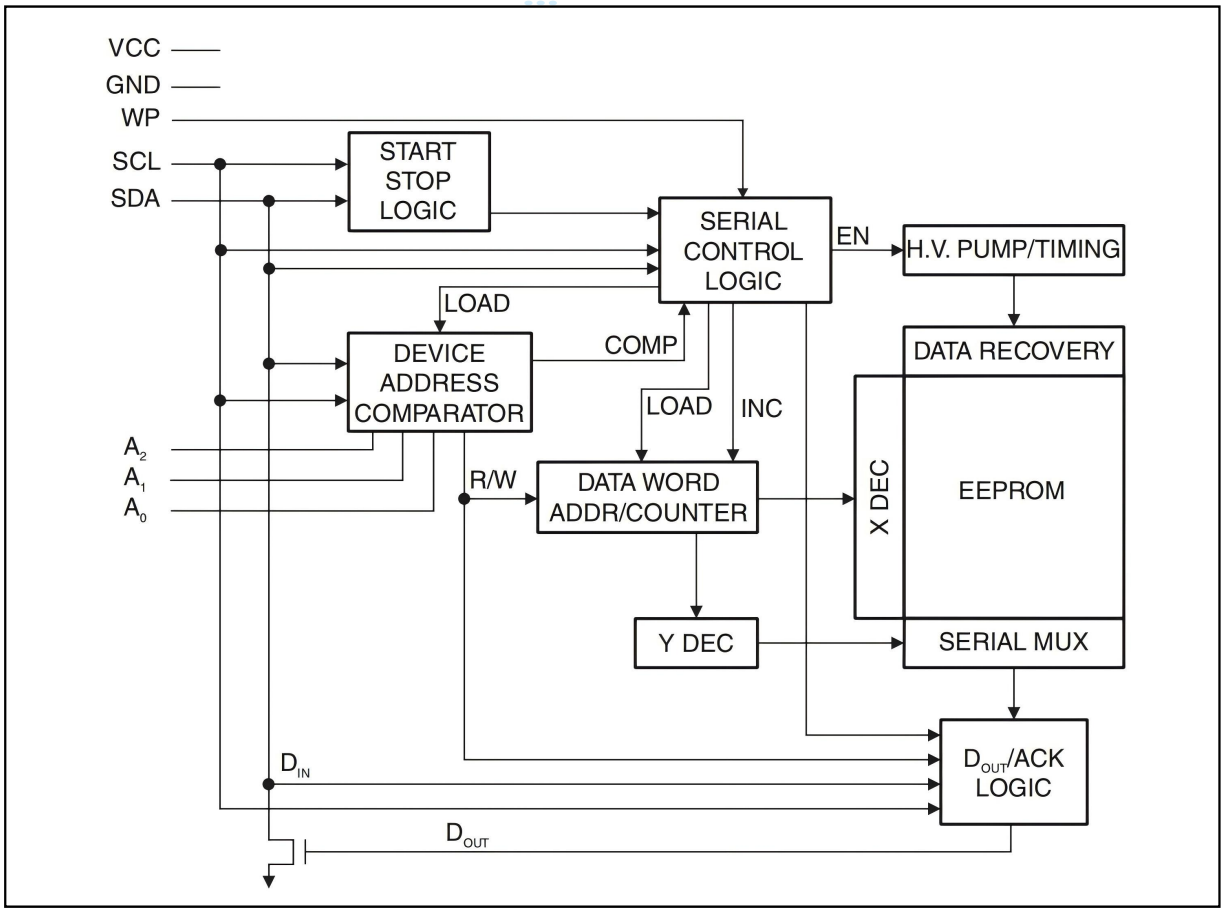

Figure 1. Block Diagram

Pin Description

SERIAL CLOCK (SCL): The SCL input is used to positive edge clock data into each EEPROM device and negative edge clock data out of each device.

SERIAL DATA (SDA): The SDA pin is bidirectional for serial data transfer. This pin is open-drain driven and may be wire-ORed with any number of other open-drain or open collector devices.

DEVICE/PAGE ADDRESSES (A2, A1, A0): The A2, A1, and A0 pins are device address inputs that are hardwired (directly to GND or to Vcc) for compatibility with other AT24Cxx devices. When the pins are hardwired, as many as eight 512K devices may be addressed on a single bus system. (Device addressing is discussed in detail under “ Device Addressing, ” page 8.) A device is selected when a corresponding hardware and software match is true. If these pins are left floating, the A2, A1, and A0 pins will be internally pulled down to GND. However, due to capacitive coupling that may appear during customer applications, TUDI recommends always connecting the address pins to a known state. When using a pull-up resistor, TUDI recommends using 10kΩ or less.

WRITE PROTECT (WP): The write protect input, when connected to GND, allows normal write operations. When WP is connected directly to Vcc, all write operations to the memory are inhibited. If the pin is left floating, the WP pin will be internally pulled down to GND. However, due to capacitive coupling that may appear during customer applications, TUDI recommends always connecting the WP pins to a known state. When using a pull-up resistor, TUDI recommends using 10kΩ or less.

Memory Organization

AT24C512B, 512K SERIAL EEPROM: The 512K is internally organized as 512 pages of 128-bytes each. Random word addressing requires a 16-bit data word address.

Table 2. Pin Capacitance (1)

Applicable over recommended operating range from: T_A= 25°C, f = 1.0 MHz, V_{CC}= +1.8V to +5.5V

Symbol	Test Condition	Max	Units	Conditions
$C_{I/O}$	Input/Output Capacitance (SDA)	8	pF	$V_{I/O}$=0V
C_{IN}	Input Capacitance(A_0,A_1,SCL)	6	pF	V_{IN}=0V

Note: 1. This parameter is characterized and is not 100% tested.

Table 3. DC Characteristics

Applicable over recommended operating range from: T_{AI}= −40°C to +85°C, V_{CC} = +1.8V to +5.5V (unless otherwise noted)

Symbol	Parameter	Test Condition		Min	Typ	Max	Units
V_{CC1}	Supply Voltage			1.8		3.6	V
V_{CC2}	Supply Voltage			2.5		5.5	V
I_{CC}	Supply Current	V_{CC}=5.0V	READ at 400 kHz			2.0	mA
I_{CC}	Supply Current	V_{CC}=5.0V	WRITE at 400 kHz			3.0	mA
I_{SB1}	Standby Current	V_{CC}=1.8V	V_{IN}=V_{CC} or V_{SS}			1.0	μA
		V_{CC}=3.6V				3.0	μA

Table 3. DC Characteristics (Continued)

Symbol	Parameter	Test Condition		Min	Typ	Max	Units
I_{SB2}	Standby Current	V_{cc}=2.5V	V_{IN}=V_{cc} or Vss			2.0	μA
		V_{cc}=5.5V				6.0	μA
I_{LI}	Input Leakage Current	V_{IN}=V_{cc} or V_{SS}			0.10	3.0	μA
I_{LO}	Output Leakage Current	V_{OUT}=V_{cc} or V_{SS}			0.05	3.0	μA
V_{IL}	Input Low Level(1)			-0.6		V_{cc}×0.3	V
V_{IH}	Input High Level(1)			V_{cc}×0.7		V_{cc}+0.5	V
V_{OL1}	Output Low Level	V_{cc}=1.8V	I_{OL}=0.15 mA			0.2	V
V_{OL2}	Output Low Level	V_{cc}=3.0V	I_{OL}=2.1 mA			0.4	V

Note: 1. V_{IL} min and V_{IH} max are reference only and are not tested.

Table 4. AC Characteristics (Industrial Temperature)

Applicable over recommended operating range from T_{AI}= –40°C to +85°C, V_{CC} = +1.8V to +5.5V,C_L = 100 pF (unless oth-erwise noted). Test conditions are listed in Note 2.5V,

Symbol	Parameter	1.8-volt		2.5,5.0-volt		Units
		Min	Max	Min	Max	
f_{SCL}	Clock Frequency,SCL		400		1000	kHz
t_{LOW}	Clock Pulse Width Low	1.3		0.4		μs
t_{HIGH}	Clock Pulse Width High	0.6		0.4		μs
t_i	Noise Suppression Time(1)		100		50	ns
t_{AA}	Clock Low to Data Out Valid	0.05	0.9	0.05	0.55	μs
t_{BUF}	Time the bus must be free before a new transmission can start(1)	1.3		0.5		μs
$t_{HD.STA}$	Start Hold Time	0.6		0.25		μs
$t_{SU.STA}$	Start Set-up Time	0.6		0.25		μs
$t_{HD.DAT}$	Data In Hold Time	0		0		μs
$t_{SU.DAT}$	Data In Set-up Time	100		100		ns
t_R	Inputs Rise Time(1)		0.3		0.3	μs

Table 4. AC Characteristics (Industrial Temperature)(Continued)

Symbol	Parameter	1.8-volt		2.5,5.0-volt		Units
		Min	Max	Min	Max	
$t_{SU,STO}$	Stop Set-up Time	0.6		0.25		μs
t_{DH}	Data Out Hold Time	50		50		ns
t_{WR}	Write Cycle Time		5		5	ms
Endurance (1)	25℃,Page Mode,3.3V	1,000,000				Write Cycles

1.This parameter is ensured by characterization only.
2. AC measurement conditions:
R_L (connects to V_{CC}): 1.3 k (2.5V, 5V), 10 k (1.8V)
Input pulse voltages: 0.3 V_{CC} to 0.7 V_{CC}
Input rise and fall times: ≤ 50 ns
Input and output timing reference voltages: 0.5 V_{CC}

Device Operation

CLOCK and DATA TRANSITIONS: The SDA pin is normally pulled high with an external device. Data on the SDA pin may change only during SCL low time periods (see Figure 5).
Data changes during SCL high periods will indicate a start or stop condition as defined below.
START CONDITION: A high-to-low transition of SDA with SCL high is a start condition which must precede any other command (see Figure 6).
STOP CONDITION: A low-to-high transition of SDA with SCL high is a stop condition. After a read sequence, the stop command will place the EEPROM in a standby power mode (see Figure 6).
ACKNOWLEDGE: All addresses and data words are serially transmitted to and from the EEPROM in 8-bit words. The EEPROM sends a zero during the ninth clock cycle to acknowl-edge that it has received each word.
STANDBY MODE: The AT24C512B features a low power standby mode which is enabled: a) upon power-up and b) after the receipt of the STOP bit and the completion of any internal operations.
Software Reset: After an interruption in protocol, power loss or system reset, any 2-wire part can be protocol reset by following these steps: (a) Create a start bit condition, (b) clock 9 cycles, (c) create another start bit followed by stop bit condition as shown below. The device is ready for next communication after above steps have been completed.

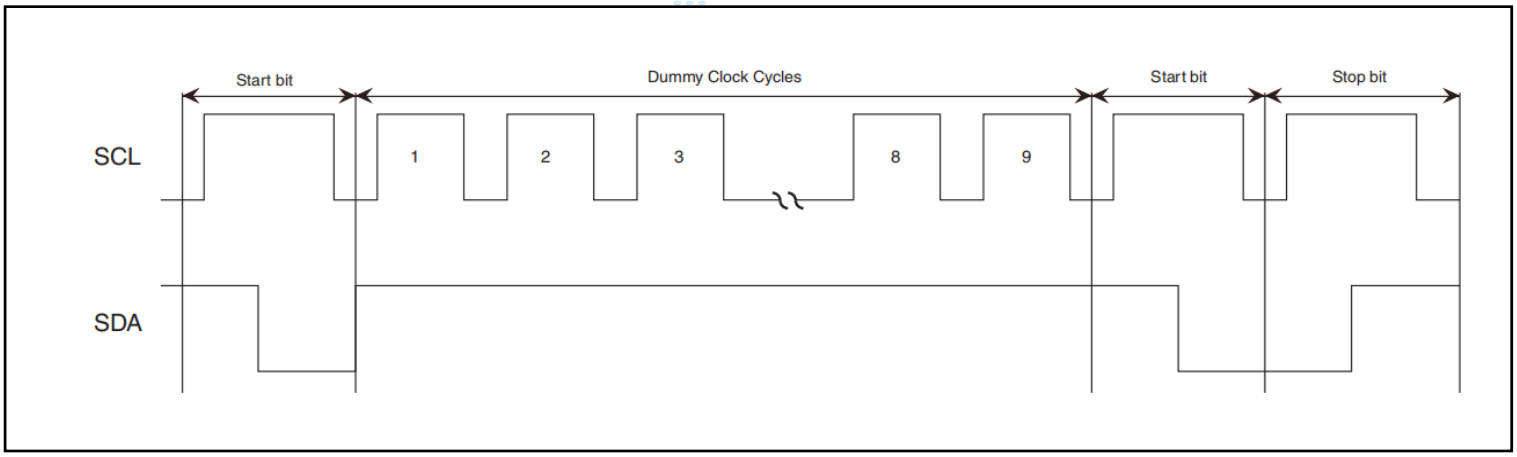

Figure 2. Protocol Reset Condition

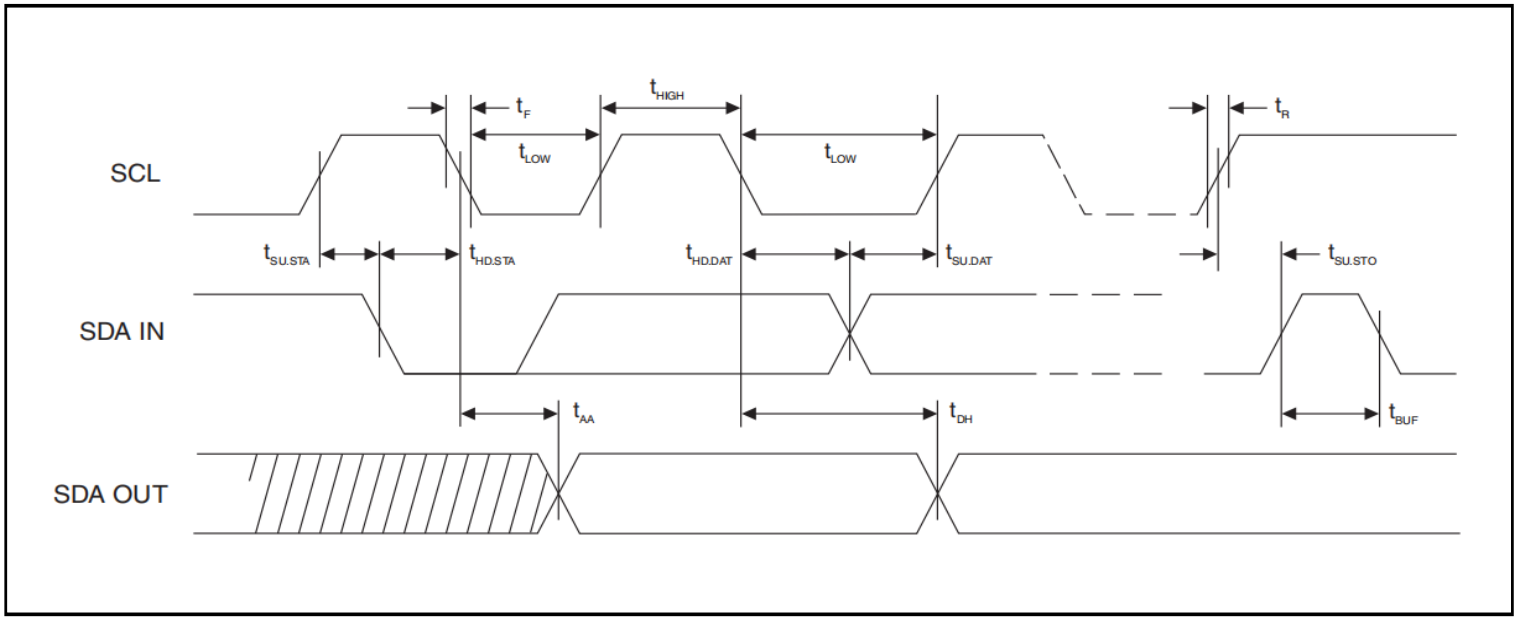

Figure 3. Bus Timing (SCL: Serial Clock, SDA: Serial Data I/O)

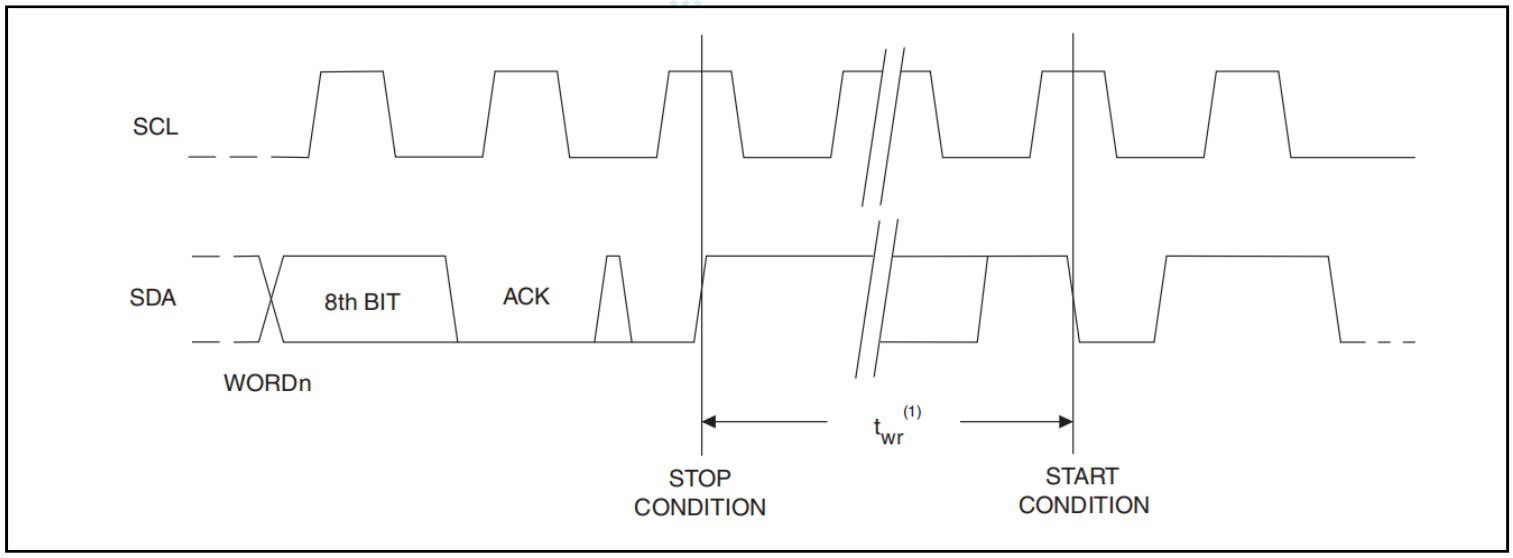

Figure 4. Write Cycle Timing (SCL: Serial Clock, SDA: Serial Data I/O)

Note: 1. The write cycle time t_{WR} is the time from a valid stop condition of a write sequence to the end of the internal clear/ write cycle.

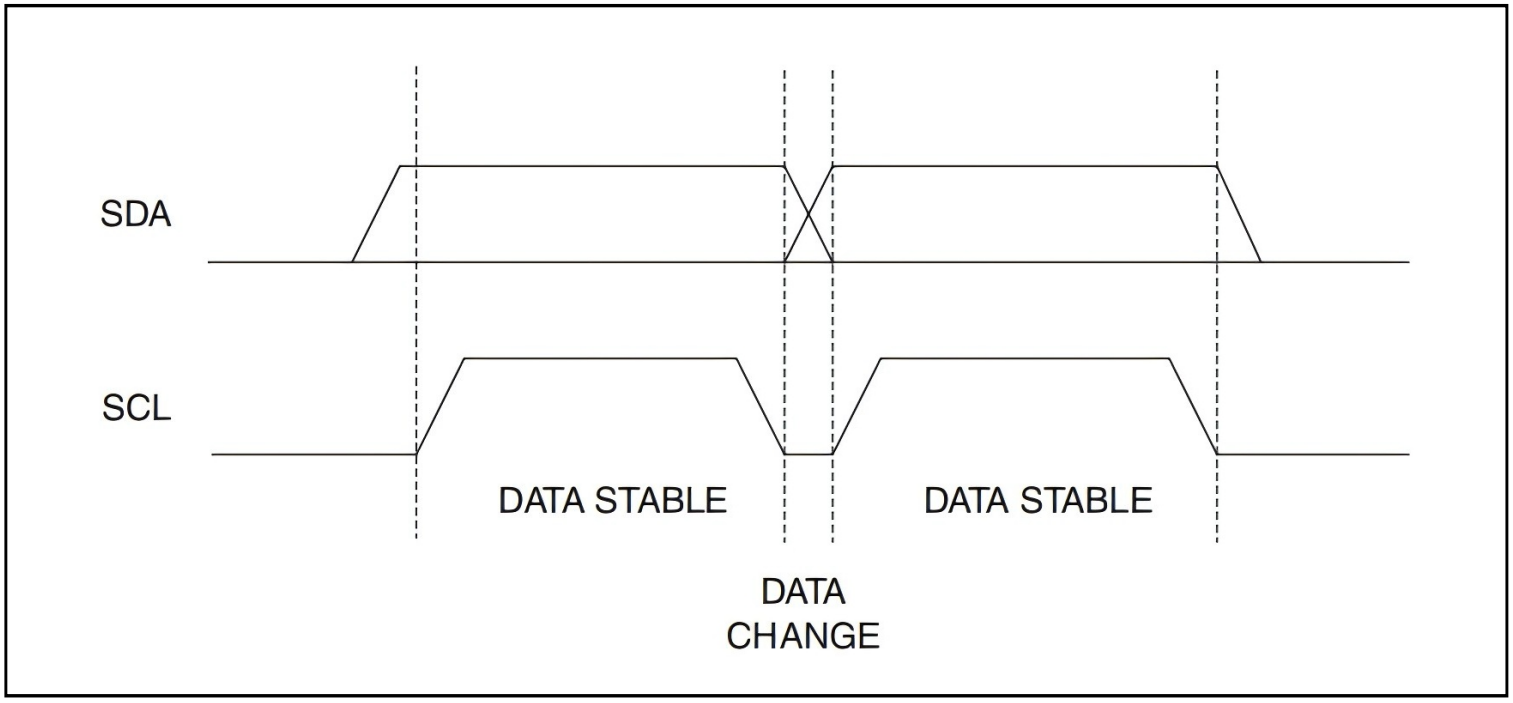

Figure 5. Data Validity

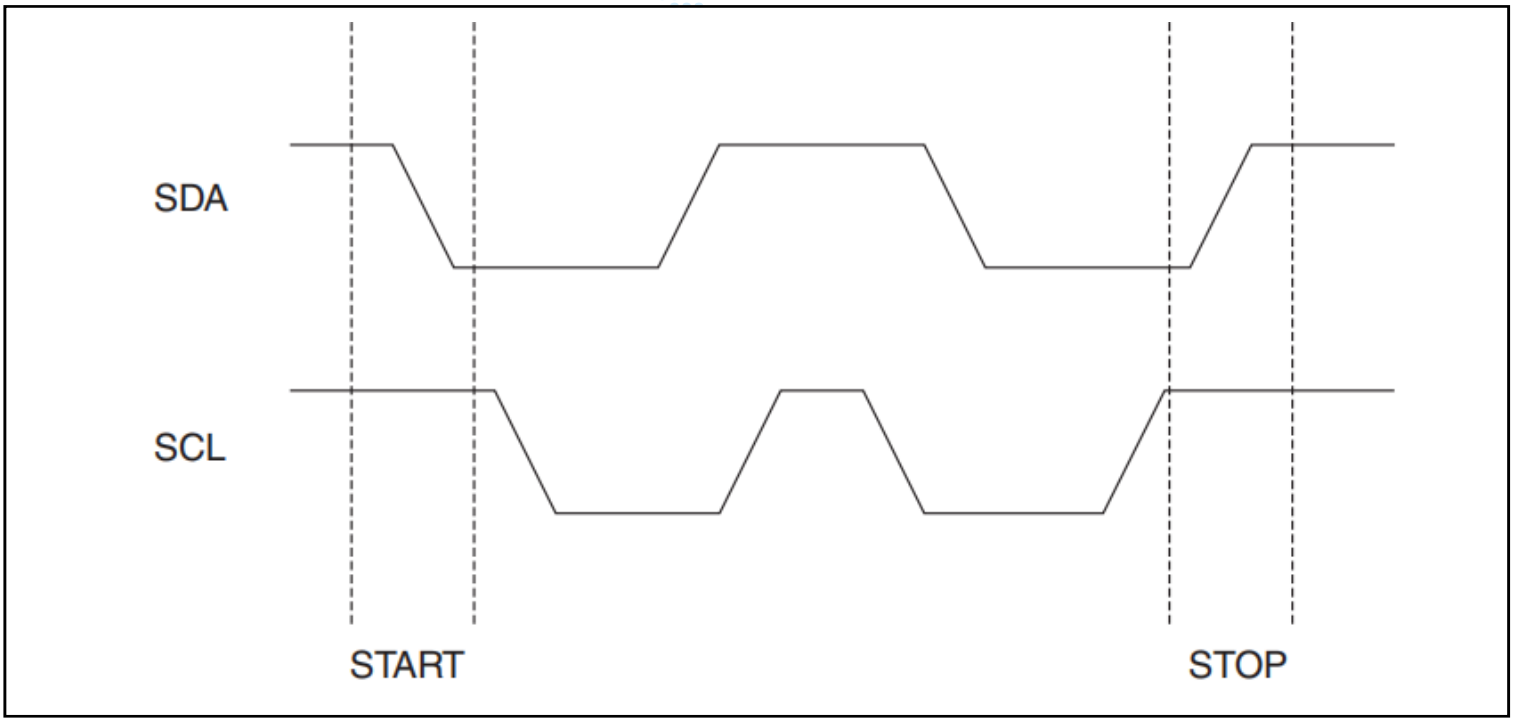

Figure 6. Start and Stop Definition

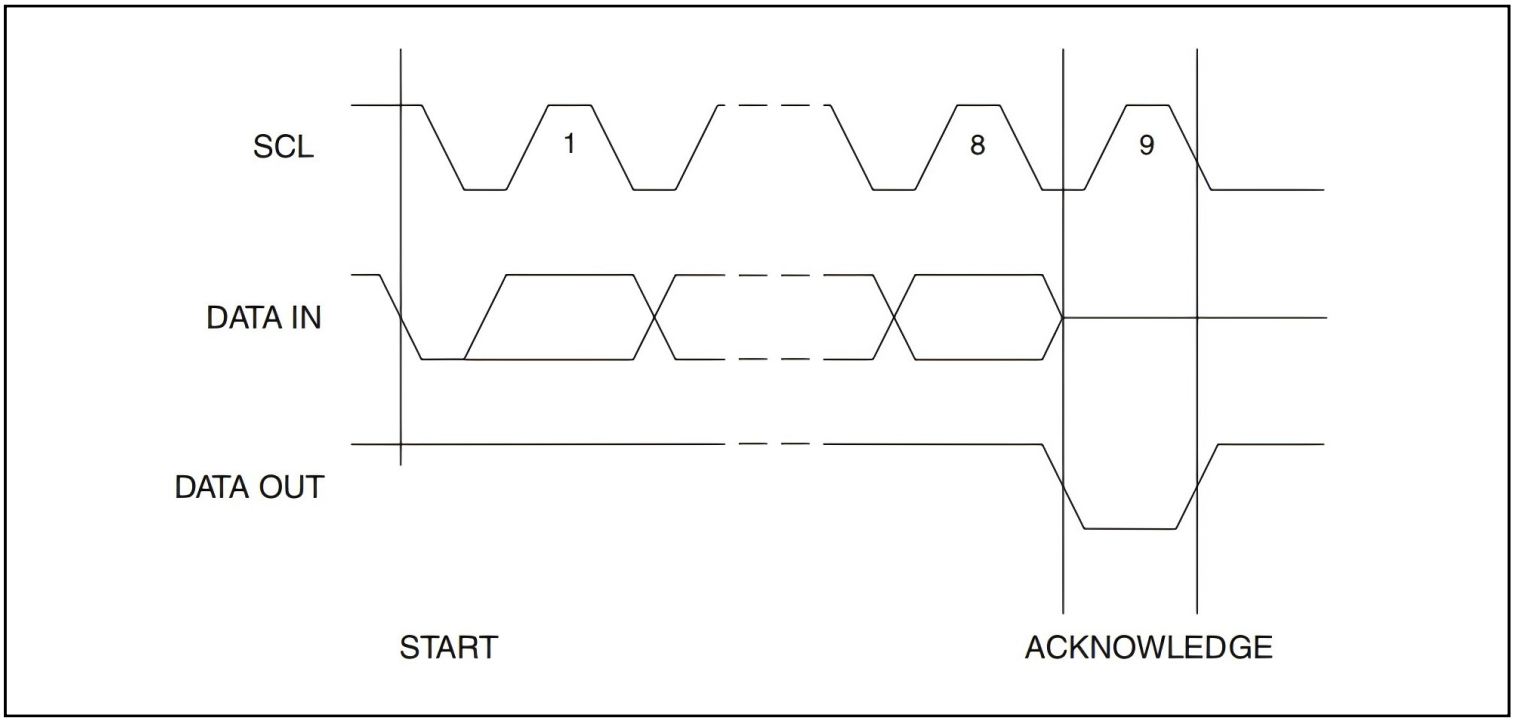

Figure 7. Output Acknowledge

Device Addressing

The 512K EEPROM requires an 8-bit device address word following a start condition to enable the chip for a read or write operation (see Figure 8). The device address word con-sists of a mandatory “1”, “0” sequence for the first four most significant bits as shown. This is common to all two-wire EEPROM devices.
The 512K uses the three device address bits A2, A1, A0 to allow as many as eight devices on the same bus. These bits must compare to their corresponding hardwired input pins. The A2, A1 and A0 pins use an internal proprietary circuit that biases them to a logic low condition if the pins are allowed to float.
The eighth bit of the device address is the read/write operation select bit. A read operation is ini -tiated if this bit is high and a write operation is initiated if this bit is low.
Upon a compare of the device address, the EEPROM will output a “0”. If a compare is not made, the device will return to a standby state.
DATA SECURITY: The AT24C512B has a hardware data protection scheme that allows the user to Write Protect the whole memory when the WP pin is at V_{CC}.

Write Operations

BYTE WRITE: A write operation requires two 8-bit data word addresses following the device address word and acknowledgment. Upon receipt of this address, the EEPROM will again respond with a “0” and then clock in the first 8-bit data word. Following receipt of the 8-bit data word, the EEPROM will output a “0”. The addressing device, such as a microcontroller, then must terminate the write sequence with a stop condition. At this time the EEPROM enters an internally-timed write cycle, t_{WR}, to the nonvolatile memory. All inputs are disabled during this write cycle and the EEPROM will not respond until the write is complete (see Figure 9).

PAGE WRITE: The 512K EEPROM is capable of 128-byte page writes.

A page write is initiated the same way as a byte write, but the microcontroller does not send a stop condition after the first data word is clocked in. Instead, after the EEPROM acknowledges receipt of the first data word, the microcontroller can transmit up to 127 more data words. The EEPROM will respond with a “0” after each data word received. The microcontroller must termi-nate the page write sequence with a stop condition (see Figure 10).

The data word address lower 7 bits are internally incremented following the receipt of each data word. The higher data word address bits are not incremented, retaining the memory page row location. When the word address, internally generated, reaches the page boundary, the follow-ing byte is placed at the beginning of the same page. If more than 128 data words are transmitted to the EEPROM, the data word address will “roll over” and previous data will be overwritten. The address roll over during write is from the last byte of the current page to the first byte of the same page.

ACKNOWLEDGE POLLING: Once the internally-timed write cycle has started and the EEPROM inputs are disabled, acknowledge polling can be initiated. This involves sending a start condition followed by the device address word. The Read/Write bit is representative of the operation desired. Only if the internal write cycle has completed will the EEPROM respond with a “0”, allowing the read or write sequence to continue.

Read Operations

Read operations are initiated the same way as write operations with the exception that the Read/Write select bit in the device address word is set to “1”. There are three read operations: current address read, random address read and sequential read.

CURRENT ADDRESS READ: The internal data word address counter maintains the last address accessed during the last read or write operation, incremented by “1”. This address stays valid between operations as long as the chip power is maintained. The address roll over during read is from the last byte of the last memory page, to the first byte of the first page. Once the device address with the Read/Write select bit set to “1” is clocked in and acknowl-edged by the EEPROM, the current address data word is serially clocked out. The microcontroller does not respond with an input “0” but does generate a following stop condition (see Figure 11).

RANDOM READ: A random read requires a “dummy” byte write sequence to load in the data word address. Once the device address word and data word address are clocked in and acknowledged by the EEPROM, the microcontroller must generate another start condition. The microcontroller now initiates a current address read by sending a device address with the Read /Write select bit high. The EEPROM acknowledges the device address and serially clocks out the data word. The microcontroller does not respond with a “0” but does generate a following stop condition (see Figure 12).

SEQUENTIAL READ: Sequential reads are initiated by either a current address read or a ran-dom address read. After the microcontroller receives a data word, it responds with an acknowledge. As long as the EEPROM receives an acknowledge, it will continue to increment the data word address and serially clock out sequential data words. When the memory address limit is reached, the data word address will roll over and the sequential read will continue. The sequential read operation is terminated when the microcontroller does not respond with a “0” but does generate a following stop condition (see Figure 13).

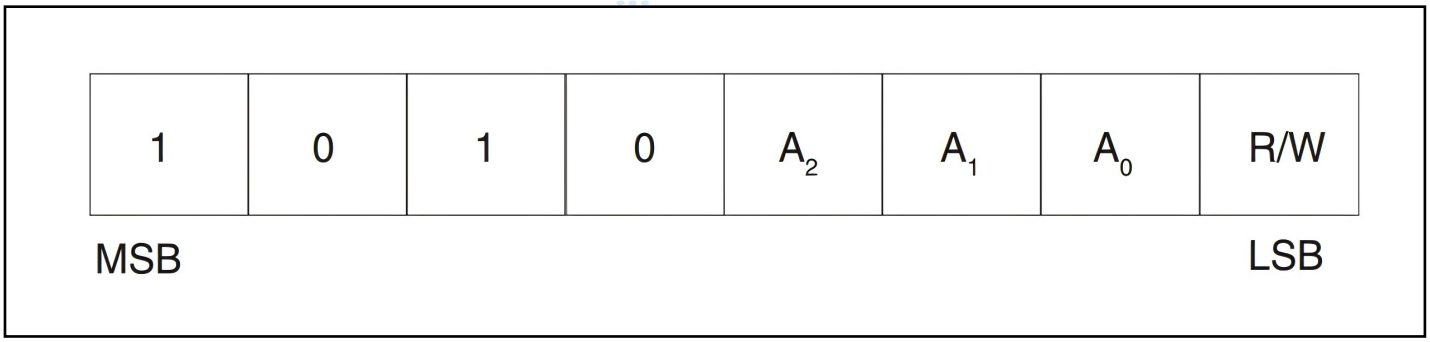

Figure 8. Device Address

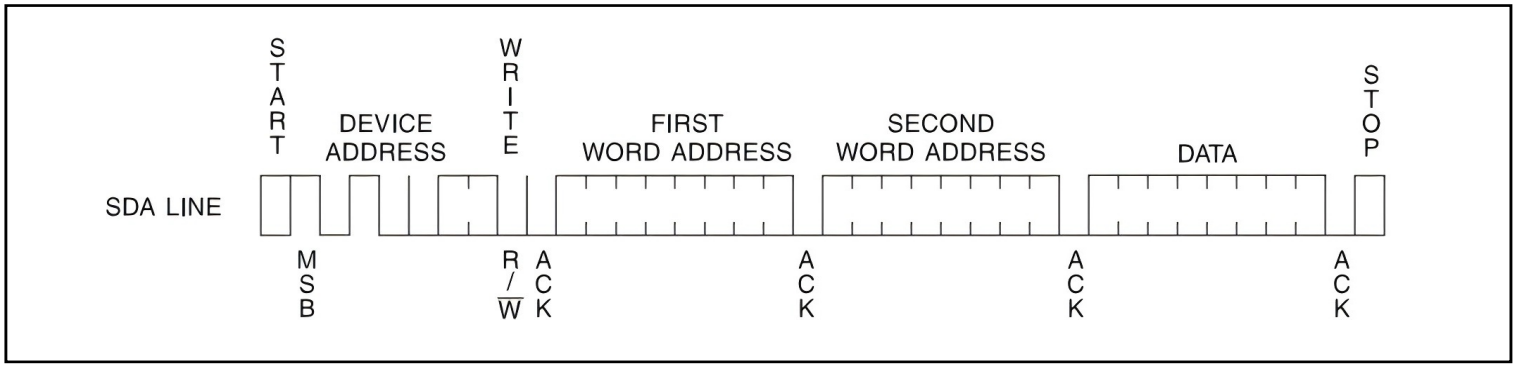

Figure 9. Byte Write

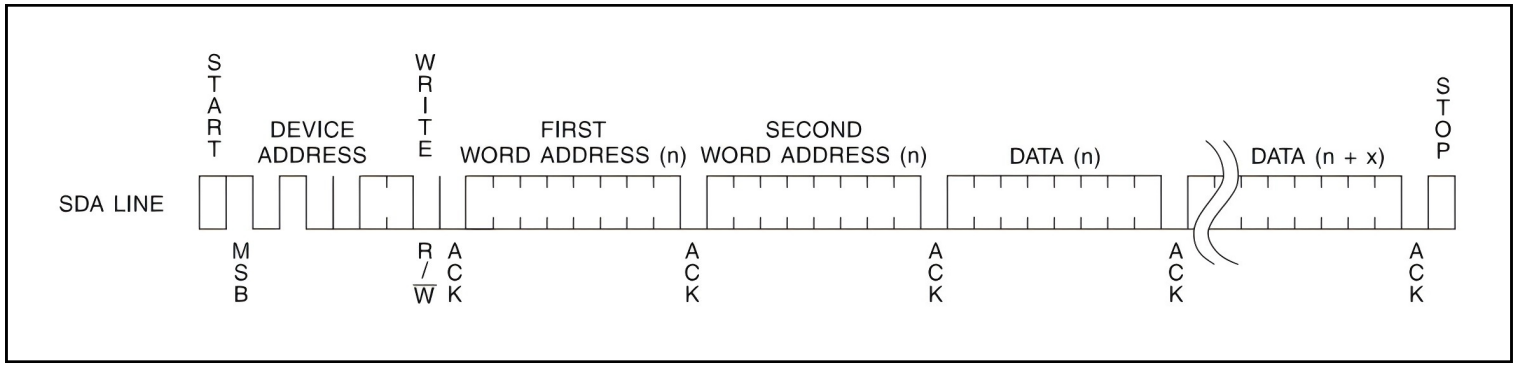

Figure 10. Page Write

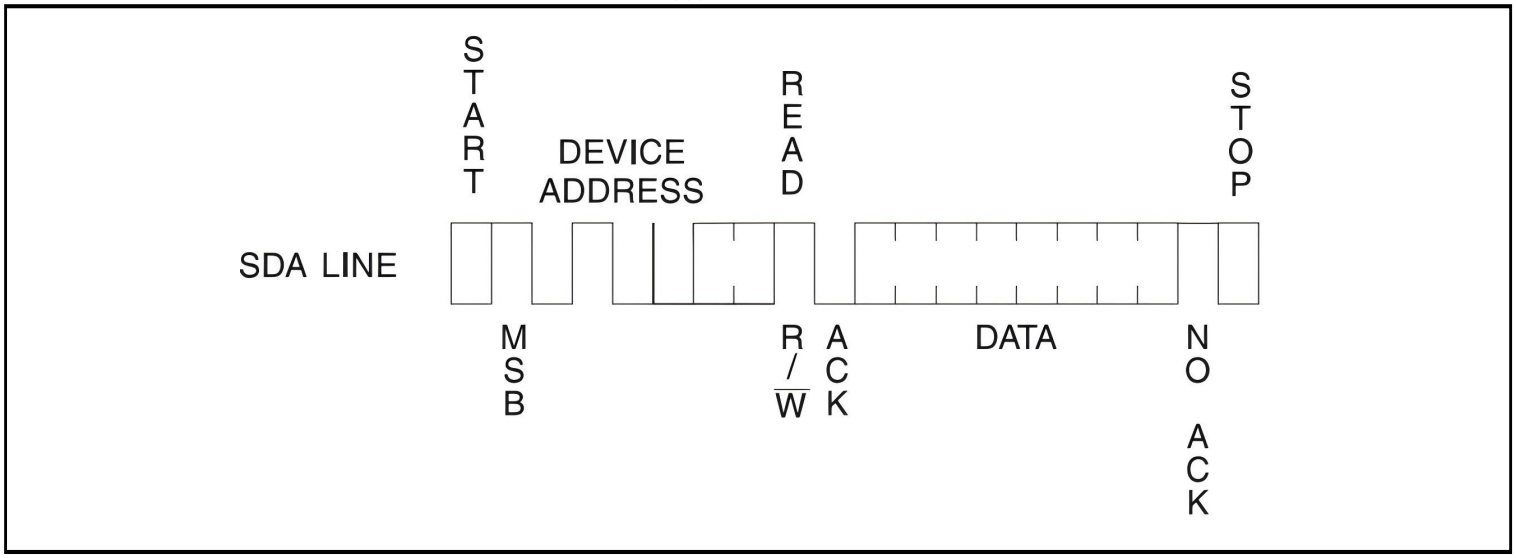

Figure 11. Current Address Read

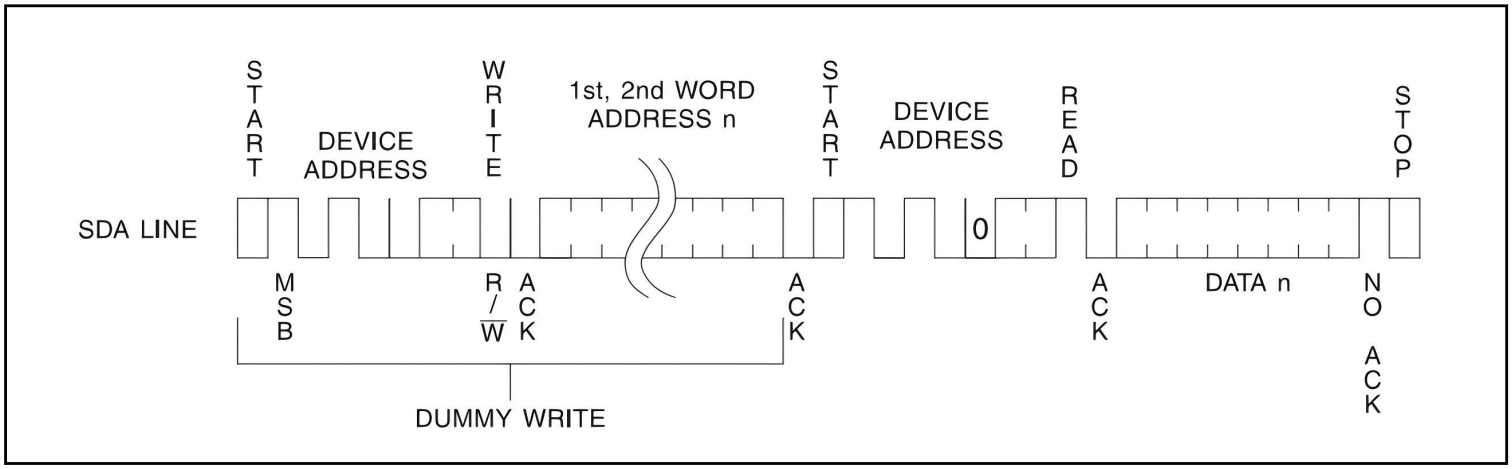

Figure 12. Random Read

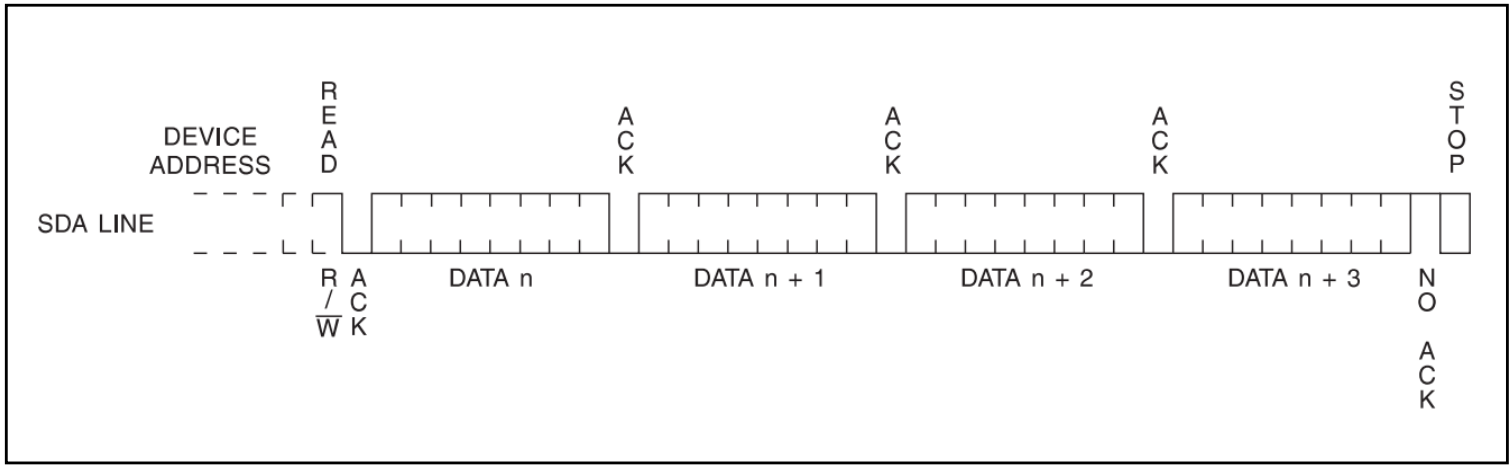

Figure 13. Sequential Read

Order information

Order Number	Package	Package Quantity	Marking On The park	Temperature
AT24C512B-PU-TUDI	DIP8	Tube,50,A box of 2000	24C512B	-40°C to 85°C
			2FB1	
AT24C512BN-SH-T-TUDI	SOP8	Tape,Reel,4000	2FB1	
AT24C512BN-SH25-T-TUDI	SOP8	Tape,Reel,4000	2FB2	
			TD24C512B	

Revision history

	Date	Revision	Page
V1.0	2022/9	New	1-15
V1.1	2024/4	Update model and PDF template	1-18

Package SOP8

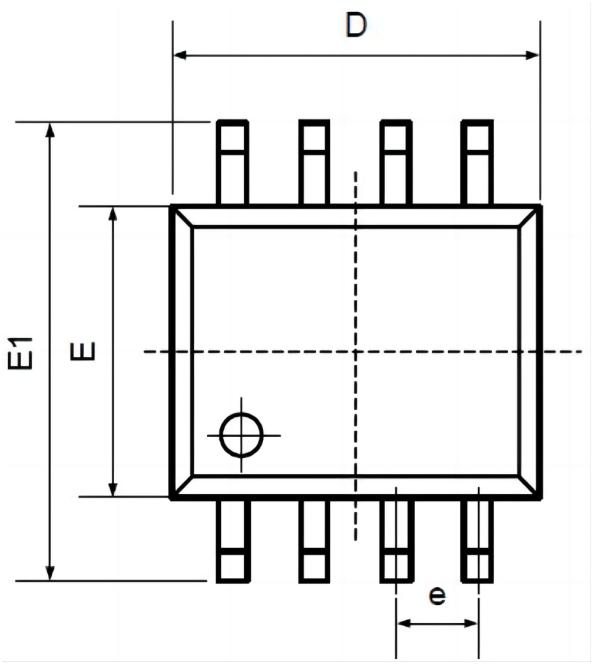

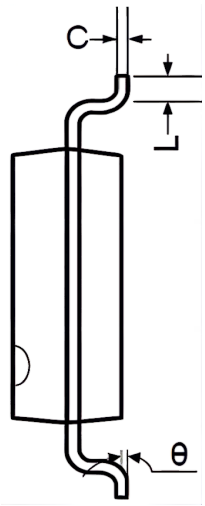

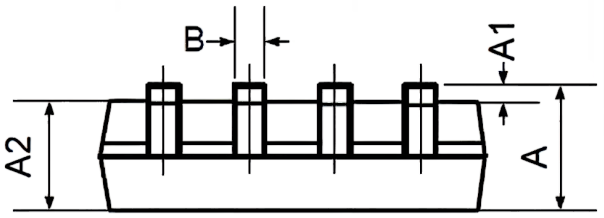

Symbol	Dimensions In Millimeters		Dimensions In Inches	
	Min	Max	Min	Max
A	1.350	1.750	0.053	0.069
A1	0.100	0.250	0.004	0.010
A2	1.350	1.550	0.053	0.061
B	0.330	0.510	0.013	0.020
C	0.190	0.250	0.007	0.010
D	4.780	5.000	0.188	0.197
E	3.800	4.000	0.150	0.157
E1	5.800	6.300	0.228	0.248
e	1.270TYP		0.050TYP	
L	0.400	1.270	0.016	0.050
θ	0°	8°	0°	8°

Package DIP8

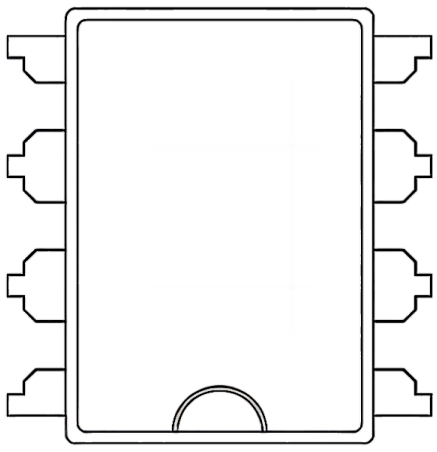

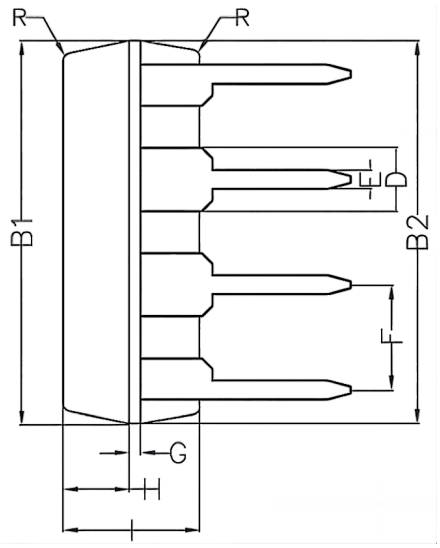

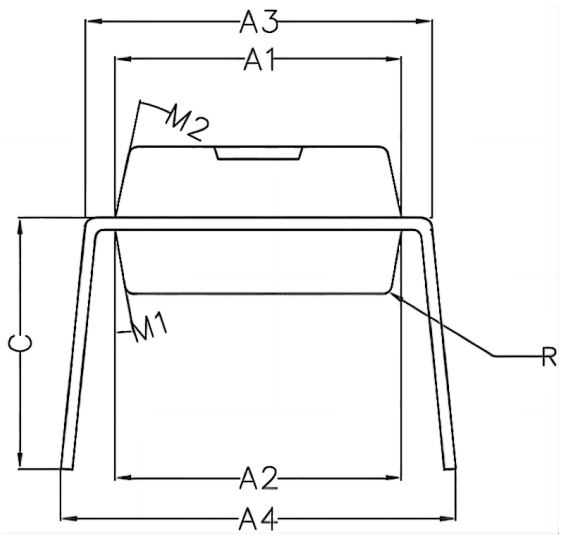

Symbol	Min	Non	Max
A1	6.28	6.33	6.38
A2	6.33	6.38	6.43
A3	7.52	7.62	7.72
A4	7.80	8.40	9.00
B1	9.15	9.20	9.25
B2	9.20	9.25	9.30
C		5.57	
D		1.52	
E	0.43	0.45	0.47
F		2.54	
G		0.25	
H	1.54	1.59	1.64
工	3.22	3.27	3.32
R		0.20	
M1	9°	10°	11°
M2	11°	12°	13°

Important statement:

●TUDI Semiconductor reserves the right to modify the product manual without prior notice! Before placing an order, customers need to confirm whether the obtained information is the latest version and verify the completeness of the relevant information.

●Any semi-guide product is subject to failure or malfunction under specified conditions. It is the buyer's responsibility to comply with safety standards when using TUDI Semiconductor products for system design and whole machine manufacturing.And take the appropriate safety measures to avoid the potential in the risk of loss of personal injury or loss of property situation!

●TUDI Semiconductor products have not been licensed for life support, military, and aerospace applications,and therefore TUDI Semiconductor is not responsible for any consequences arising from the use of this product in these areas.

●If any or all TUDI Semiconductor products (including technical data, services) described or contained in this document are subject to any applicable local export control laws and regulations, they may not be exported without an export license from the relevant authorities in accordance with such laws.

●The specifications of any and all TUDI Semiconductor products described or contained in this document specify the performance, characteristics, and functionality of said products in their standalone state, but do not guarantee the performance, characteristics, and functionality of said products installed in Customer's products or equipment. In order to verify symptoms and conditions that cannot be evaluated in a standalone device, the Customer should ultimately evaluate and test the device installed in the Customer's product device.

●TUDI Semiconductor documentation is only allowed to be copied without any alteration of the content and with the relevant authorization.TUDI Semiconductor assumes no responsibility or liability for altered documents.

●TUDI Semiconductor is committed to becoming the preferred semiconductor brand for customers, and TUDI Semiconductor will strive to provide customers with better performance and better quallity products.