

钍地半导体
Tudi Semiconductor

Product Specification

TUDI-M24M02-DR

2-Mbit serial I²C bus EEPROM

网址 www.sztdbdt.com

用芯智造·卓越品质

semiconductor device manufacturer

- Design
- research and development
- production
- and sales

Features

- Compatible with all I2C bus modes:
  - 1 MHz
  - 400 kHz
  - 100 kHz
- Memory array:
  - 2 Mbit (256 Kbyte) of EEPROM
  - Page size: 256 byte
  - Additional Write lockable page
- Single supply voltage:
  - 1.8 V to 5.5 V over –40 °C / +85 °C
- Write:
  - Byte Write within 10 ms
  - Page Write within 10 ms
- Random and sequential Read modes
- Write protect of the whole memory array
- Enhanced ESD/Latch-Up protection
- More than 4 million Write cycles
- More than 200-years data retention

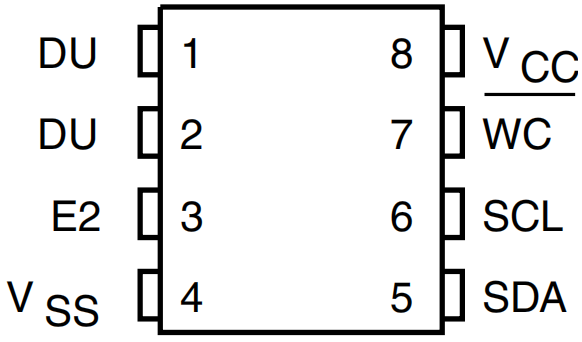

SOP8

Description

The M24M02-DR is a 2 Mbit I^2C-compatible EEPROM (Electrically Erasable PROgrammable Memory) organized as 256 K × 8 bits. The M24M02-DR can operate with a supply voltage from 1.8 V to 5.5 V, over an ambient temperature range of –40 °C / +85 °C. The M24M02-DR offers an additional page, named the Identification Page (256 byte). The Identification Page can be used to store sensitive application parameters which can be (later) permanently locked in Read -only mode.

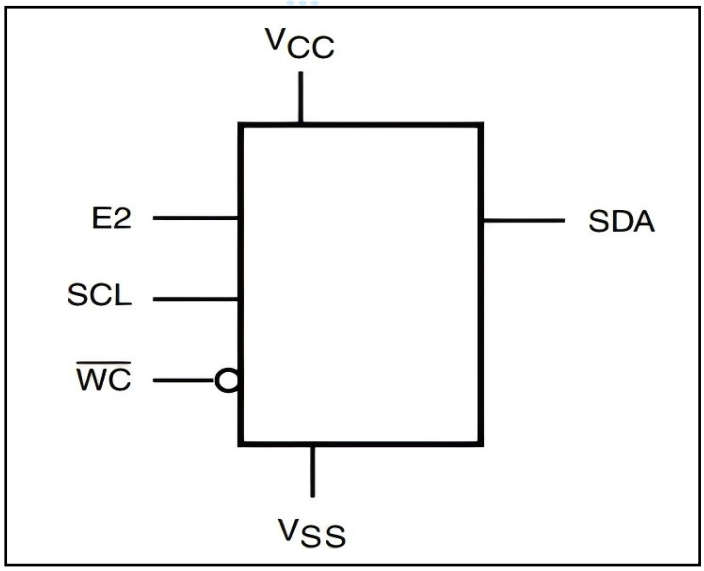

Figure 1. Logic diagram

Table 1. Signal names

Signal name	Function	Direction
E2	Chip Enable	Input
SDA	Serial Data	I/O
SCL	Serial Clock	Input
WC	Write Control	Input
V_{cc}	Supply voltage	-
V_{ss}	Ground	-

Table 2. Signals vs. bump position

Position	A	B	C	D
1		-	SCL	
2	V_{cc}	WC	-	SDA
3	DU	-	-	V_{ss}
4	-	DU	E2	-

Signal description

Serial Clock (SCL): The signal applied on the SCL input is used to strobe the data available on SDA (in) and to output the data on SDA(out).

Serial Data (SDA):SDA is an input/output used to transfer data in or data out of the device. SDA (out) is an open drain output that may be wire-OR ’ ed with other open drain or open collector signals on the bus. A pull-up resistor must be connected .

Chip Enable (E2): This input signal is used to set the value that is to be looked for on the bit b3 of the 7-bit device select code. This input must be tied to V_{CC} or V_{SS}, to establish the device select code as shown in Figure 2. When not connected (left floating), this input is read as low (0).

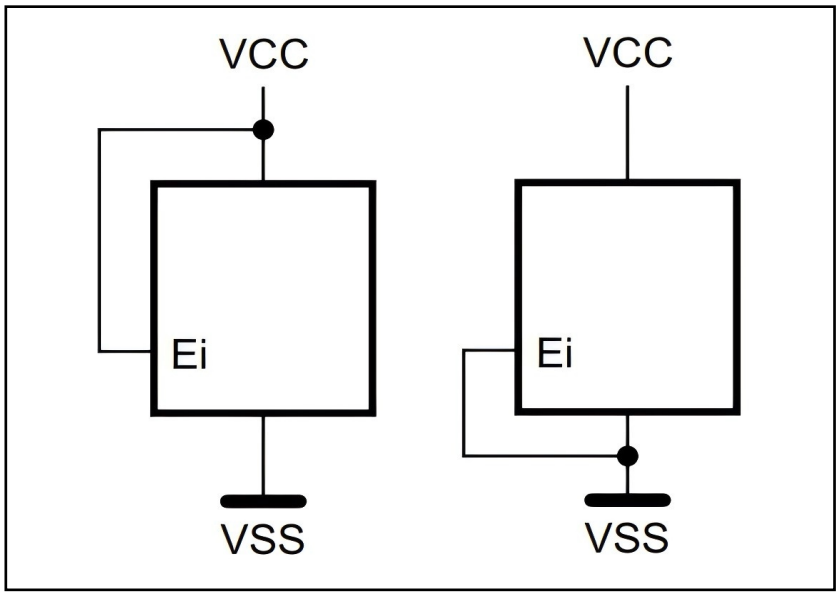

Figure 2. Chip enable inputs connection

Write Control (WC): This input signal is useful for protecting the entire contents of the memory from inadvertent write operations. Write operations are disabled to the entire memory array when Write Control (WC) is driven high. Write operations are enabled when Write Control (WC) is either driven low or left floating. When Write Control (WC) is driven high, device select and address bytes are acknowledged, Data bytes are not acknowledged.

V_{SS}(ground):V_{SS} is the reference for the V_{CC} supply voltage.

Supply voltage (V_{CC})

Operating supply voltage (V_{CC}): Prior to selecting the memory and issuing instructions to it, a valid and stable V_{CC} voltage within he specified [V_{CC}(max)] range must be applied (see Operating conditions DC and AC parameters*)*. In order to secure a stable DC supply voltage, it is recommended to decouple the V_{CC} line with a suitable capacitor (usually of the order of 10 nF to 100 nF) close to the V_{CC}/V_{SS} line with a suitable capacitor (usually of the order of 10 nF to 100 nF) close to the V_{CC}/V_{SS} package pins. This voltage must remain stable and valid until the end of the transmission of the instruction and, for a write instruction, until the completion of the internal write cycle (t_W).

Power-up conditions: The V_{CC} voltage has to rise continuously from 0 V up to the minimum V_{CC} operating voltage (see Operating conditions DC and AC parameters).

Device reset: In order to prevent inadvertent write operations during power-up, a power-on-reset (POR) circuit is included.
At power-up, the device does not respond to any instruction until V_{CC} has reached the internal reset threshold voltage. This threshold is lower than the minimum V_{CC} operating voltage (see Operating conditions DC and AC parameters). When V_{CC} passes over the POR threshold, the device is reset and enters the Standby Power mode; however, the device must not be accessed until V_{CC} reaches a valid and stable DC voltage within the specified [V_{CC}(min), V_{CC}(max)] range (see Operating conditions DC and AC parameters).
In a similar way, during power-down (continuous decrease in V_{CC}), the device must not be accessed when V_{CC} drops below V_{CC}(min). When V_{CC} drops below the power-on-reset threshold voltage, the device stops responding to any instruction sent to it.

Power-down conditions: During power-down (continuous decrease in V_{CC}), the device must be in the Standby Power mode (mode reached after decoding a Stop condition, assuming that there is no internal write cycle in progress).

Memory organization

The memory is organized as shown below.

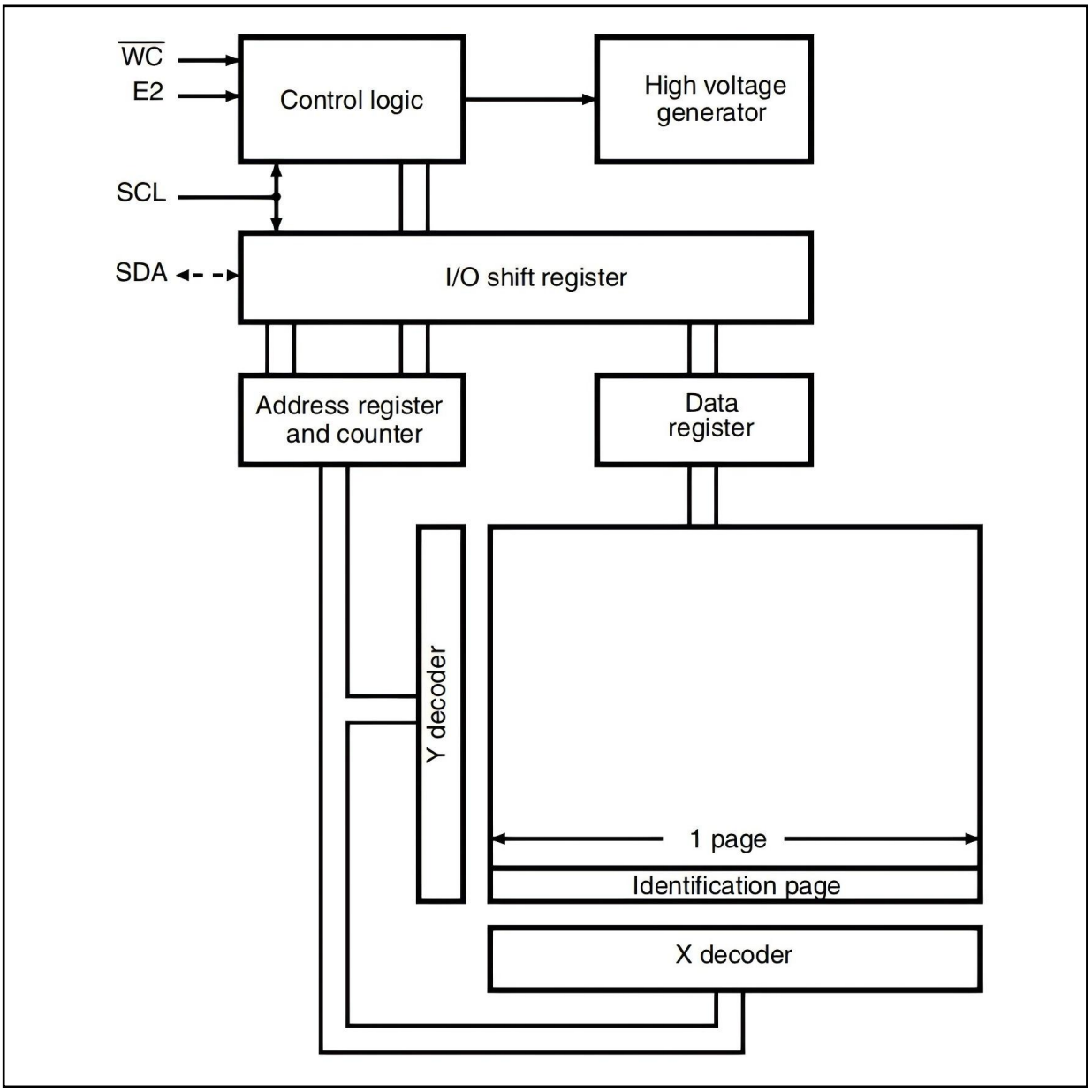

Figure 3. Block diagram

Device operation

The device supports the I²C protocol. This is summarized in Figure 4. Any device that sends data on to the bus is defined to be a transmitter, and any device that reads the data to be a receiver. The device that controls the data transfer is known as the bus master, and the other as the slave device. A data transfer can only be initiated by the bus master, which will also provide the serial clock for synchronization. The device is always a slave in all communications.

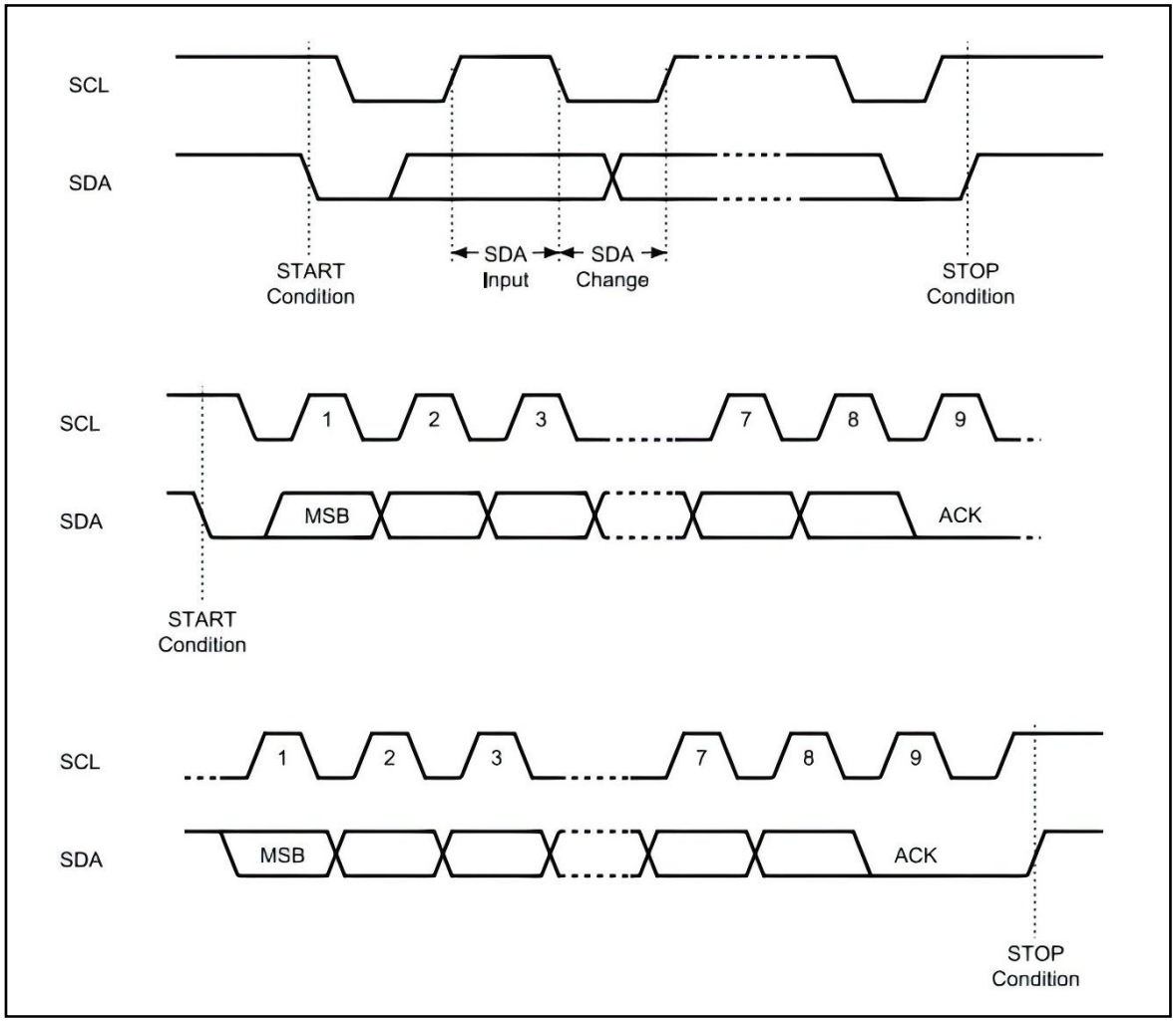

Figure 4. I²C bus protocol

Start condition: Start is identified by a falling edge of Serial Data (SDA) while Serial Clock (SCL) is stable in the high state. A Start condition must precede any data transfer instruction. The device continuously monitors (except during a Write cycle) Serial Data (SDA) and Serial Clock (SCL) for a Start condition.

Stop condition: Stop is identified by a rising edge of Serial Data (SDA) while Serial Clock (SCL) is stable and driven high. A Stop condition terminates communication between the device and the bus master. A Read instruction that is followed by NoAck can be followed by a Stop condition to force the device into the Standby mode. A Stop condition at the end of a Write instruction triggers the internal Write cycle.

Data input: During data input, the device samples Serial Data (SDA) on the rising edge of Serial Clock (SCL). For correct device operation, Serial Data (SDA) must be stable during the rising edge of Serial Clock (SCL), and the Serial Data (SDA) signal must change *only* when Serial Clock (SCL) is driven low.

Acknowledge bit (ACK): The acknowledge bit is used to indicate a successful byte transfer. The bus transmitter, whether it be bus master or slave device, releases Serial Data (SDA) after sending eight bits of data. During the 9th clock pulse period, the receiver pulls Serial Data (SDA) low to acknowledge the receipt of the eight data bits.

Device addressing: To start communication between the bus master and the slave device, the bus master must initiate a Start condition. Following this, the bus master sends the device select code, shown in Table 3 (most significant bit first).

Table 3. Device select code

	Device type identifier(1)				Chip Enable	MSB address bits		RW
	b7	b6	b5	b4	b3	b2	b1	b0
Device select code when addressing the memory array	1	0	1	0	E2(2)	A17	A16	RW
Device select code when addressing the Identification page	1	0	1	1	E2(2)	X	X	RW

1. The most significant bit, b7, is sent first.
2. E2 bit value is compared to the logic level applied on the input pin E2.

When the device select code is received, the device only responds if the Chip EnableAddress is the same as the value on the Chip Enable (E2) input.

The 8th bit is the Read/Write bit (RW). This bit is set to 1 for Read and 0 for Write operations. If a match occurs on the device select code, the corresponding device gives anacknowledge on Serial Data (SDA) during the 9th bit time. If the device does not matchthe device select code, it deselect itself from the bus, and goes into Standby mode.

Instructions

Write operations: Following a Start condition the bus master sends a device select code with the R/W bit (RW) reset to 0. The device acknowledges this, as shown in Figure 5, and waits for two address bytes. The device responds to each address byte with an acknowledge bit, and then waits for the data byte.

Table 4. Most significant address byte

A15	A14	A13	A12	A11	A10	A9	A8

Table 5. Least significant address byte

A7	A6	A5	A4	A3	A2	A1	A0

The 256 Kbytes (2 Mb) are addressed with 18 address bits, the 16 lower address bits being defined by the two address bytes and the most significant address bits (A17, A16) being included in the Device Select code (see Table 4).

When the bus master generates a Stop condition immediately after a data byte Ack bit (in the “10th bit” time slot), either at the end of a Byte Write or a Page Write, the internal Write cycle tW is triggered. A Stop condition at any other time slot does not trigger the internal Write cycle.

After the Stop condition and the successful completion of an internal Write cycle (tW), the device internal address counter is automatically incremented to point to the next byte after the last modified byte.

During the internal Write cycle, Serial Data (SDA) is disabled internally, and the device does not respond to any requests.

If the Write Control input (WC) is driven High, the Write instruction is not executed and the accompanying data bytes are not acknowledged, as shown in Figure 6.

Byte Write: After the device select code and the address byte, the bus master sends one data byte. If the addressed location is Write-protected, by Write Control (WC) being driven high, the device replies with NoAck, and the location is not modified. If, instead, the addressed location is not Write-protected, the device replies with Ack. The bus master terminates the transfer by generating a Stop condition, as shown in Figure 5.

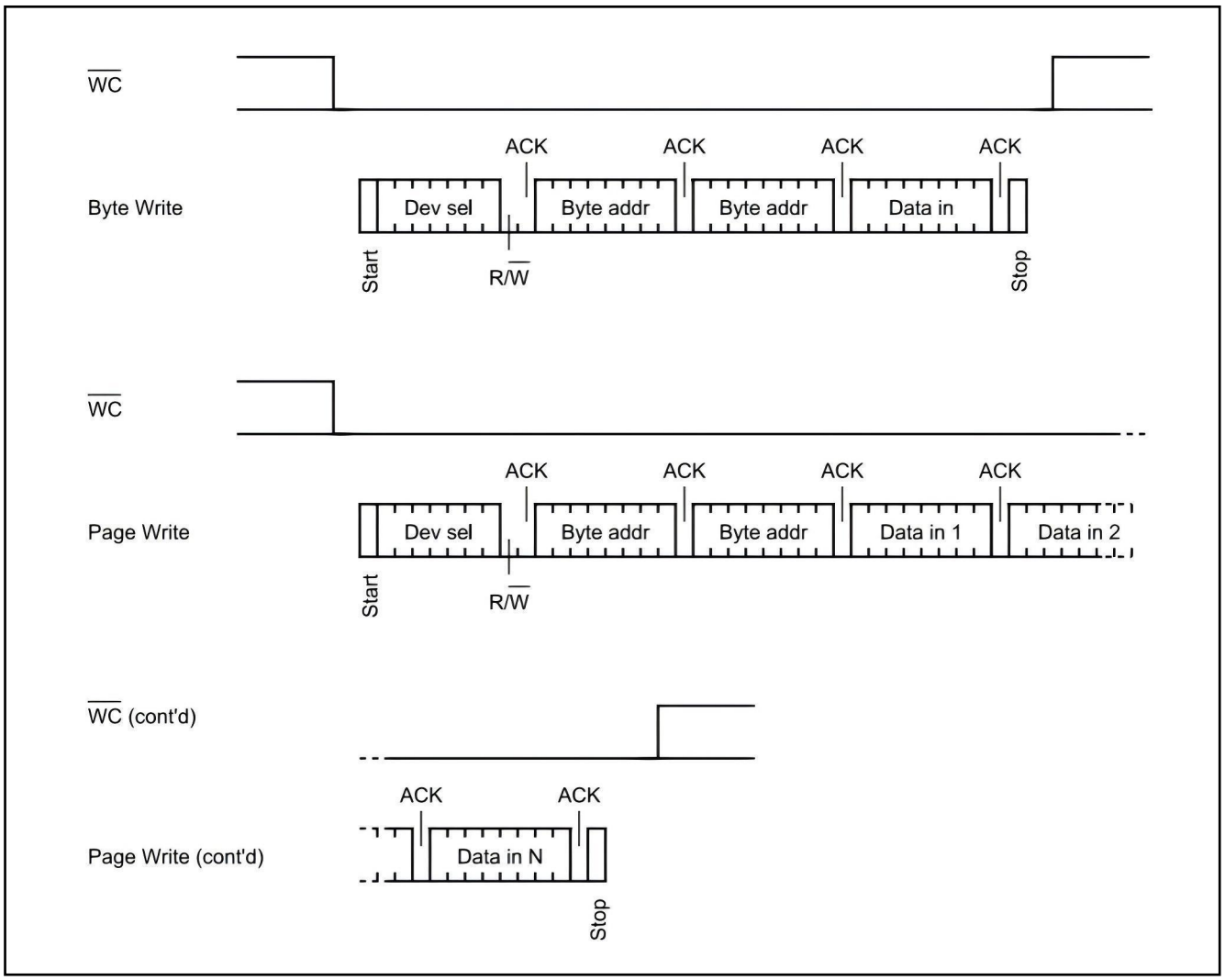

Figure 5. Write mode sequences with WC = 0 (data write enabled)

Page Write: The Page Write mode allows up to 256 byte to be written in a single Write cycle, provided that they are all located in the same page in the memory: that is, the most significant memory address bits, A17/A8, are the same. If more bytes are sent than will fit up to the end of the page, a “roll-over” occurs, i.e. the bytes exceeding the page end are written on the same page, from location 0.

The bus master sends from 1 to 256 byte of data, each of which is acknowledged by the device if Write Control (WC) is low. If Write Control (WC) is high, the contents of the addressed memory location are not modified, and each data byte is followed by a NoAck, as shown in Figure 6. After each transferred byte, the internal page address counter is incremented. The transfer is terminated by the bus master generating a Stop condition.

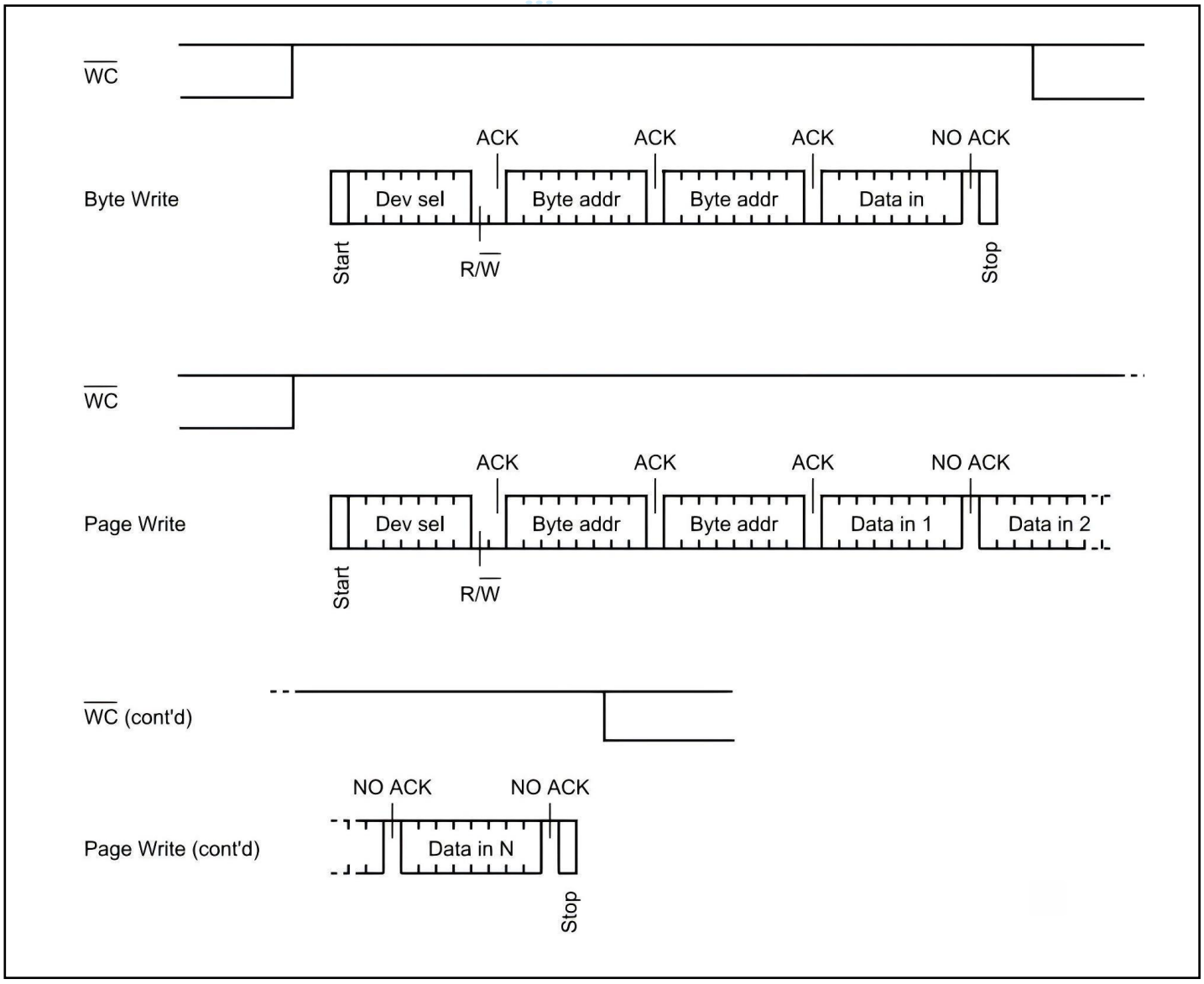

Figure 6. Write mode sequences with WC = 1 (data write inhibited)

Write Identification Page

The Identification Page (256 byte) is an additional page which can be written and (later) permanently locked in Read-only mode. It is written by issuing the Write Identification Page instruction. This instruction uses the same protocol and format as Page Write (into memory array), except for the following differences:

- Device type identifier = 1011b
- MSB address bits A17/A8 are don't care except for address bit A10 which must be ‘ 0 ’ .
- LSB address bits A7/A0 define the byte address inside the Identification page.

If the Identification page is locked, the data bytes transferred during the Write Identification Page instruction are not acknowledged (NoAck).

Lock Identification Page

The Lock Identification Page instruction (Lock ID) permanently locks the Identification page in Read-only mode. The Lock ID instruction is similar to Byte Write (into memory array) with the following specific conditions:

- Device type identifier = 1011b
- Address bit A10 must be ‘ 1 ’ ; all other address bits are don't care
- The data byte must be equal to the binary value xxxx xx1x, where x is don't care

ECC (Error Correction Code) and Write cycling: The Error Correction Code (ECC) is an internal logic function which is transparent for the I^2C communication protocol.

The ECC logic is implemented on each group of four EEPROM bytes(1).Inside a group, if a single bit out of the four bytes happens to be erroneous during a Read operation, the ECC detects this bit and replaces it with the correct value. The read reliability is therefore much improved.

Even if the ECC function is performed on groups of four bytes, a single byte can be written/ cycled independently. In this case, the ECC function also writes/cycles the three other bytes located in the same group(1). As a consequence, the maximum cycling budget is defined at group level and the cycling can be distributed over the 4 bytes of the group: the sum of the cycles seen by byte0, byte1, byte2 and byte3 of the same group must remain below the maximum value defined Table 10: Cycling performance.

Minimizing Write delays by polling on ACK: During the internal Write cycle, the device disconnects itself from the bus, and writes a copy of the data from its internal latches to the memory cells. The maximum Write time (t_w) is shown in AC characteristics tables in : DC and AC parameters, but the typical time is shorter. To make use of this, a polling sequence can be used by the bus master.

The sequence, as shown in Figure 7, is:

- Initial condition: a Write cycle is in progress.
- Step 1: the bus master issues a Start condition followed by a device select code (the first byte of the new instruction).
- Step 2: if the device is busy with the internal Write cycle, no Ack will be returned and the bus master goes back to Step 1. If the device has terminated the internal Write cycle, it responds with an Ack, indicating that the device is ready to receive the second part of the instruction (the first byte of this instruction having been sent during Step 1).

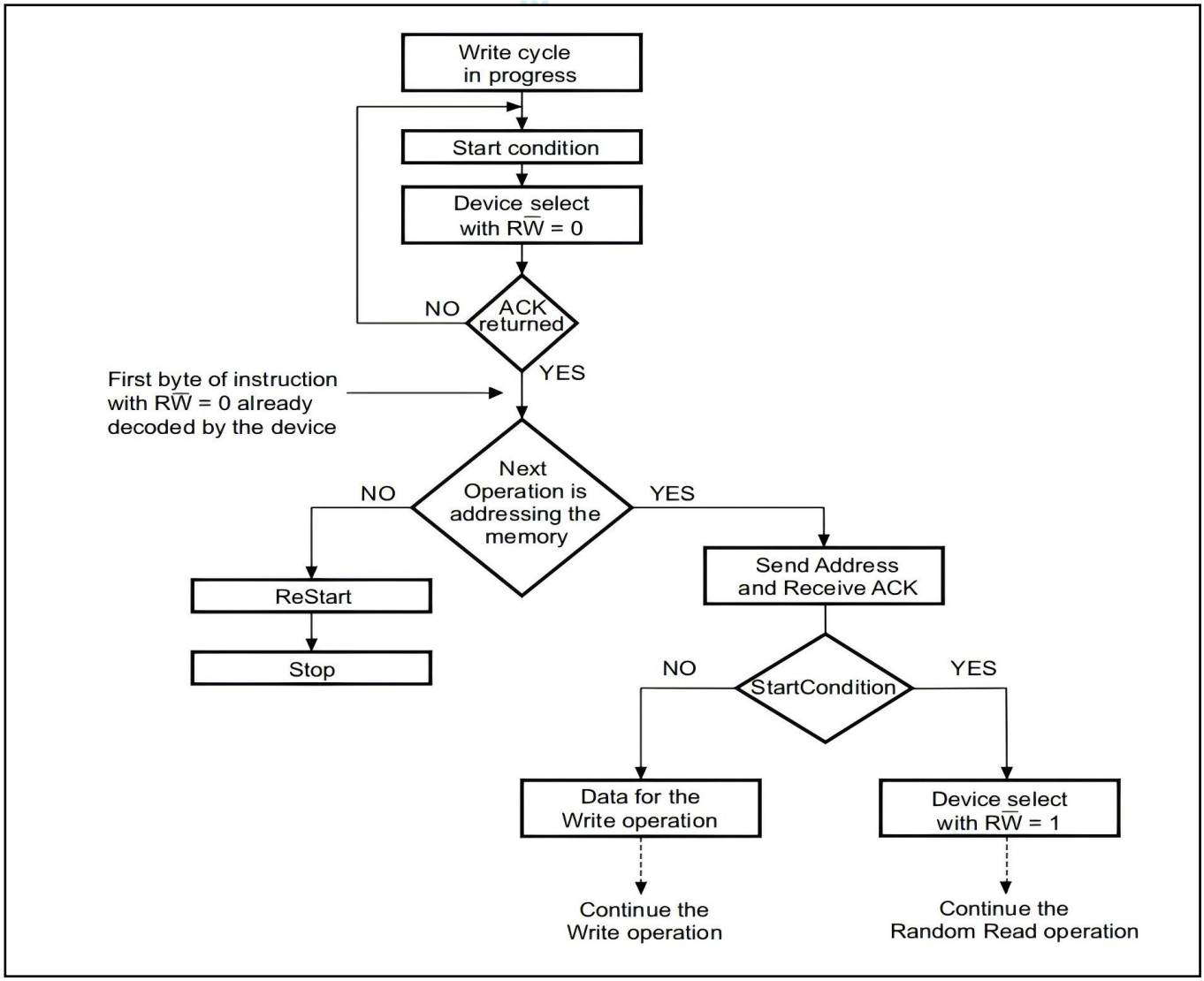

Figure 7. Write cycle polling flowchart using ACK

1. The seven most significant bits of the Device Select code of a Random Read (bottom right box in the figure) must be identical to the seven most significant bits of the Device Select code of the Write (polling instruction in the figure)

Read operations

Read operations are performed independently of the state of the Write Control (WC) signal. After the successful completion of a Read operation, the device internal address counter is incremented by one, to point to the next byte address.

For the Read instructions, after each byte read (data out), the device waits for an acknowledgment (data in) during the 9th bit time. If the bus master does not acknowledge during this 9th time, the device terminates the data transfer and switches to its Standby mode.

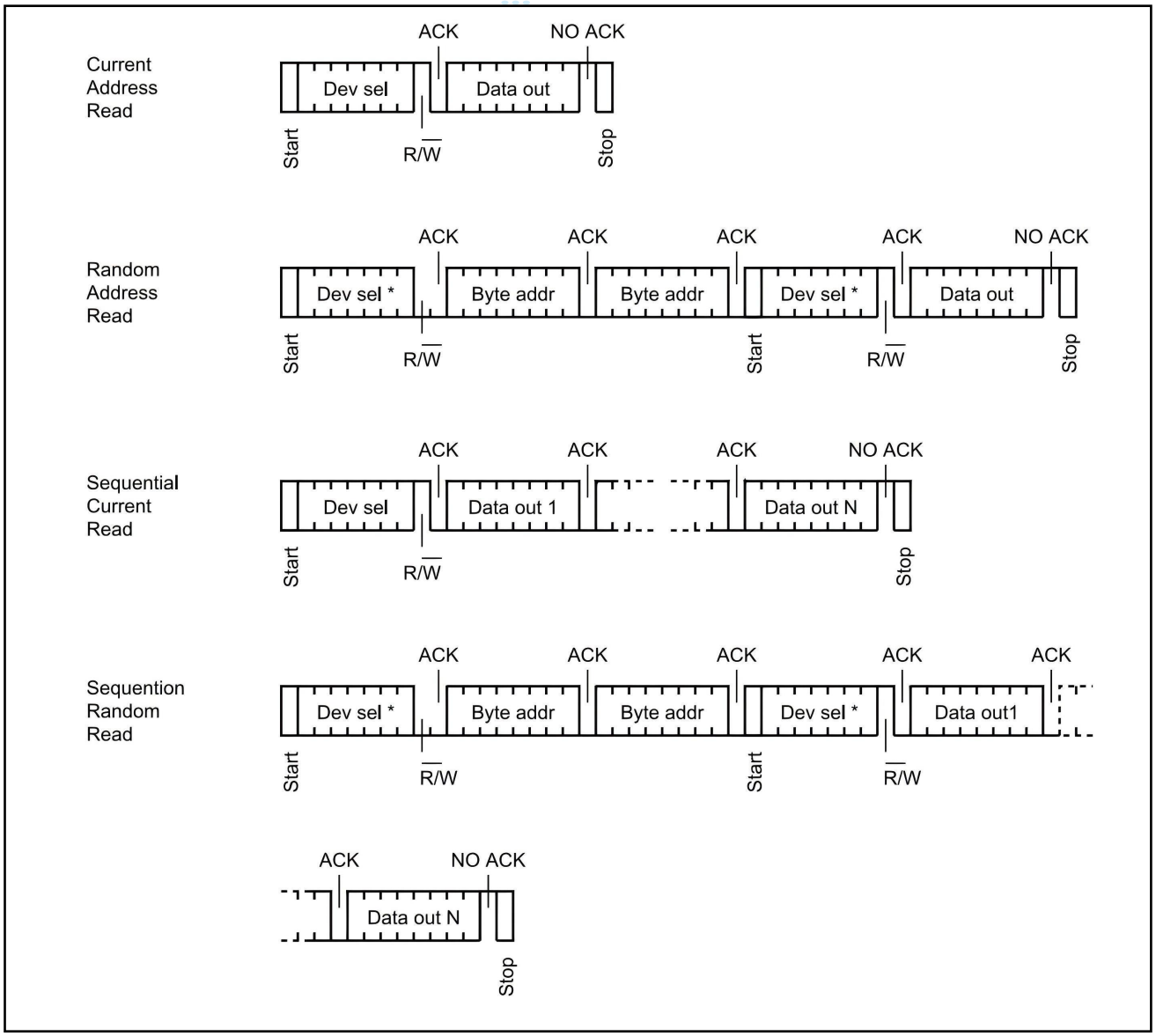

Figure 8. Read mode sequences

Random Address Read:A dummy Write is first performed to load the address into this address counter (as shown in Figure 8) but without sending a Stop condition. Then, the bus master sends another Start condition, and repeats the device select code, with the RW bit set to 1. The device acknowledgesthis, and outputs the contents of the addressed byte. The bus master must not acknowledge the byte, and terminates the transfer with a Stop condition.

Current Address Read: For the Current Address Read operation, following a Start condition, the bus master only sends a device select code with the R/W bit set to 1. The device acknowledges this, and outputs the byte addressed by the internal address counter. The counter is then incremented. The bus master terminates the transfer with a Stop condition, as shown in Figure 8, without acknowledging the byte.

Note that the address counter value is defined by instructions accessing either the memory or the Identification page. When accessing the Identification page, the address counter value is loaded with the byte location in the Identification page, therefore the next Current Address Read in the memory uses this new address counter value. When accessing the memory, it is safer to always use the Random Address Read instruction (this instruction loads the address counter with the byte location to read in the memory) instead of the Current Address Read instruction.

Sequential Read: This operation can be used after a Current Address Read or a Random Address Read. The bus master does acknowledge the data byte output, and sends additional clock pulses so that the device continues to output the next byte in sequence. To terminate the stream of bytes, the bus master must not acknowledge the last byte, and must generate a Stop condition, as shown in Figure 8. The output data comes from consecutive addresses, with the internal address counter automatically incremented after each byte output. After the last memory address, the address counter “rolls-over”, and the device continues to output data from memory address 00h.

Read Identification Page: The Identification Page (256 bytes) is an additional page which can be written and (later) permanently locked in Read-only mode. The Identification Page can be read by issuing an Read Identification Page instruction. This instruction uses the same protocol and format as the Random Address Read (from memory array) with device type identifier defined as 1011b. The MSB address bits A17/A8 are don't care, the LSB address bits A7/A0 define the byte address inside the Identification Page. The number of bytes to read in the ID page must not exceed the page boundary (e.g.: when reading the Identification Page from location 100d, the number of bytes should be less than or equal to 156, as the ID page boundary is 256 bytes).

Read the lock status: The locked/unlocked status of the Identification page can be checked by transmitting a specific truncated command [Identification Page Write instruction + one data byte] to the device. The device returns an acknowledge bit if the Identification page is unlocked, otherwise a NoAck bit if the Identification page is locked.

Right after this, it is recommended to transmit to the device a Start condition followed by a Stop condition, so that:

- Start: the truncated command is not executed because the Start condition resets the device internal logic,
- Stop: the device is then set back into Standby mode by the Stop condition.

Initial delivery state

The device is delivered with all the memory array bits and Identification page bits set to 1 (each byte contains FFh).

Maximum rating

Stressing the device outside the ratings listed in Table 6 may cause permanent damage to the device. These are stress ratings only, and operation of the device at these, or any other conditions outside those indicated in the operating sections of this specification, is not implied. Exposure to absolute maximum rating conditions for extended periods may affect device reliability.

Table 6. Absolute maximum ratings

Symbol	Parameter	Min.	Max.	Unit
	Ambient operating temperature	-40	130	℃
T_{STG}	Storage temperature	-65	150	℃
T_{LEAD}	Lead temperature during soldering	see note(1)		℃
I_{OL}	DC output current (SDA=0)	-	5	mA
V_{IO}	Input or output range	-0.50	6.5	V
V_{cc}	Supply voltage	-0.50	6.5	V
V_{ESD}	Electrostatic pulse(Human Body model)(2)	-	3000	V

1. Compliant with JEDEC Std J-STD-020D (for small body, Sn-Pb or Pb-free assembly), the ST ECOPACK® 7191395 specification, and the European directive on Restrictions of Hazardous Substances (RoHS directive 2011/65/EU of July 2011).
2. Positive and negative pulses applied on different combinations of pin connections, according to AEC-Q100-002 (compliant with ANSI/ESDA/JEDEC JS-001-2012 standard, C1=100 pF, R1=1500).

DC and AC parameters

This section summarizes the operating and measurement conditions, and the DC and AC characteristics of the device.

Table 7. Operating conditions

Symbol	Parameter	Min.	Max.	Unit
V_{CC}	Supply voltage	1.8	5.5	V
T_A	Ambient operating temperature	-40	85	℃

Table 8. AC measurement conditions

Symbol	Parameter	Min.	Max.	Unit
C_{bus}	Load capacitance	-	100	pF
-	SCL input rise/fall time,SDA input fall time	-	50	ns
-	Input levels	0.2 V_{CC} to 0.8V_{CC}		V
-	Input and output timing reference levels	0.3 V_{CC} to 0.7 V_{CC}		V

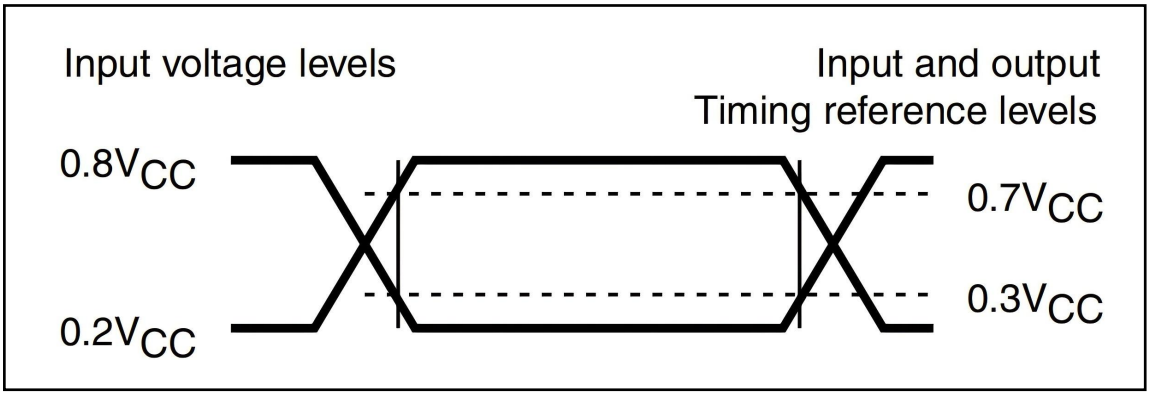

Figure 9. AC measurement I/O waveform

Table 9. Input parameters

Symbol	Parameter(1)	Test condition	Min.	Max.	Unit
C_{IN}	Input capacitance(SDA)	-	-	8	pF
C_{IN}	Input capacitance(other pins)	-	-	6	pF
Z_L	Input impedance(E2,Wc)(2)	V_{IN}<0.3 V_{cc}	30	-	kΩ
Z_H		V_{IN}>0.7 V_{cc}	500	-	kΩ

1. Characterized only, not tested in production.
2. input impedance when the memory is selected (after a Start condition).

Table 10. Cycling performance

Symbol	Parameter	Test condition	Max.	Unit
Ncycle	Write cycle endurance(1)	$T_A \leq 25°C$,$V_{cc}(min)<V_{cc}<V_{cc}(max)$	4,000,000	Write cycle(2)
		$T_A=85°C$,$V_{cc}(min)<V_{cc}<V_{cc}(max)$	1,200,000	

1. The write cycle endurance is defined for group of four bytes located at addresses [4*N, 4*N+1, 4*N+2, 4*N+3] where N is an integer. The Write cycle endurance is defined by characterization and qualification.
2. A Write cycle is executed when either a Page Write, a Byte write, a Write Identification Page or a Lock Identification Page instruction is decoded. When using the Byte Write, the Page Write or the Write Identification Page.

Table 11. Memory cell data retention

Parameter	Test condition	Min.	Unit
Data retention(1)	T_A=55℃	200	Year

1. For products identified by process letter K. The data retention behavior is checked in production, while the 200-year limit is defined from characterization and qualification results.

Table 12. DC characteristics

Symbol	Parameter	Test conditions (in addition tothose in Table 7 and Table 8)	Min.	Max.	Unit
I_{LI}	Input leakage current (E2,SCL,SDA)	$V_{IN}=V_{ss}$ or V_{cc} device in Standby mode	-	±2	μA
I_{LO}	Output leakage current	SDA in Hi-Z,external voltageapplied on SDA:V_{ss} orV_{cc}	-	±2	μA
I_{cc}	Supply current(Read)	V_{cc}=1.8V,f=400 kHz	-	1	mA
		V_{cc}=2.5V,fc=400 kHz	-	1	mA
		V_{cc}=5.5 V,fc=400 kHz	-	2	mA
		1.8V<V_{cc}<5.5V,fc=1 MHz	-	2.5	mA
I_{cco}	Supply current (Write)	Average value during tw,1.8V≤V_{cc}≤5.5V	-	2(1)	mA
I_{cc1}	Standby supply current	Device not selected(2),$V_{IN}=V_{ss}$ or V_{cc}, V_{cc}=1.8V	-	3	μA
		Device not selected(2),$V_{IN}=V_{ss}$ or V_{cc} , V_{cc}=2.5V	-	5	μA
		Device not selected(2),$V_{IN}=V_{ss}$ or V_{cc} , V_{cc}=5.5V	-	5	μA
V_{IL}	Input low voltage (SCL,SDA,WC)	1.8V≤V_{cc}<2.5V	-0.45	0.25V_{cc}	V
		2.5V≤V_{cc}<5.5V	-0.45	0.30 V_{cc}	V
V_{IH}	Input high voltage (SCL,SDA,WC)	1.8V≤V_{cc}<2.5V	0.75V_{cc}	V_{cc}+1	V
		2.5V≤V_{cc}<5.5V	0.70 V_{cc}	V_{cc}+1	
V_{OL}	Output low voltage	I_{oL}=1.0 mA,V_{cc}=1.8V	-	0.2	V
		I_{oL}=2.1 mA,V_{cc}=2.5V	-	0.4	V
		I_{oL}=3.0 mA,V_{cc}=5.5V	-	0.4	V

1. Characterized only, not tested in production.
2. The device is not selected after power-up, after a Read instruction (after the Stop condition), or after the completion of the internal write cycle tw (tw is triggered by the correct decoding of a Write instruction).

Table 13. 400 kHz AC characteristics

Symbol	Alt.	Parameter(1)	Min.	Max.	Unit
f_c	f_{scL}	Clock frequency	-	400	kHz
t_{CHCL}	t_{HIGH}	Clock pulse width high	600	-	ns
t_{CLCH}	t_{LOW}	Clock pulse width low	1300	-	ns
t_{QL1QL2}(2)	t_F	SDA(out)fall time	20(3)	120	ns
t_{XH1XH2}	t_R	Input signal rise time	(4)	(4)	ns
t_{XL1XL2}	t_F	Input signal fall time	(4)	(4)	ns
t_{DXCH}	$t_{SU:DAT}$	Data in set up time	100	-	ns
t_{CLDX}	$t_{HD:DAT}$	Data in hold time	0	-	ns
t_{CLQX}(5)	t_{DH}	Data out hold time	100	-	ns
t_{CLQV}(6)	t_{AA}	Clock low to next data valid(access time)	100	900	ns
t_{CHDL}	$t_{SU:STA}$	Start condition setup time	600	-	ns
t_{DLCL}	$t_{HD:STA}$	Start condition hold time	600	-	ns
t_{CHDH}	$t_{SU:STO}$	Stop condition set up time	600	-	ns
t_{DHDL}	t_{BUF}	Time between Stop condition and next Start condition	1300	-	ns
t_{WLDL}(7)	$t_{SU:WC}$	WC set up time (before the Start condition)	0	-	μ s
t_{DHWH}(8)	$t_{HD:WC}$	WC hold time (after the Stop condition)	1	-	μ s
t_W	t_{WR}	Write time	-	10	ms
t_{NS}(2)	-	Pulse width ignored (input filter on SCL and SDA)-single glitch	-	80	ns

1. Test conditions (in addition to those specified under Operating conditions and AC test measurement conditions in : DC and AC parameters).
2. Characterized only, not tested in production.
3. With C_L = 10 pF.
4. There is no min. or max. values for the input signal rise and fall times. It is however recommended by the I²C specification that the input signal rise and fall times be more than 20 ns and less than 300 ns when f_C < 400 kHz.
5. The min value for t_{CLQX} (Data out hold time) of the M24xxx devices offers a safe timing to bridge the undefined region of the falling edge SCL.
6. t_{CLQV} is the time (from the falling edge of SCL) required by the SDA bus line to reach either 0.3 V_{CC} or 0.7 V_{CC}.
7. WC=0 set up time condition to enable the execution of a WRITE command.
8. WC=0 hold time condition to enable the execution of a WRITE command.

Table 14. 1 MHz AC characteristics

Symbol	Alt.	Parameter	Min.	Max.	Unit
f_C	f_{SCL}	Clock frequency	0	1	MHZ
t_{CHCL}	t_{HIGH}	Clock pulse width high	260	-	ns
t_{CLCH}	t_{LOW}	Clock pulse width low	400	-	ns
t_{XH1XH2}	t_R	Input signal rise time	(1)	(1)	ns
t_{XL1XL2}	t_F	Input signal fall time	(1)	(1)	ns
t_{QL10Lz}(2)	t_F	SDA(out)fall time	20(3)	120	ns
t_{DXCH}	$t_{SU:DAT}$	Data in setup time	50	-	ns
t_{CLDX}	$t_{HD:DAT}$	Data in hold time	0	-	ns
t_{CLQX}(4)	t_{DH}	Data out hold time	100	-	ns
t_{CLQV}(5)	t_{AA}	Clock low to next data valid (access time)	-	450	ns
t_{CHDL}	$t_{SU:STA}$	Start condition setup time	250	-	ns
t_{DLCL}	$t_{HD:STA}$	Start condition hold time	250	-	ns
t_{CHDH}	$t_{SU:STO}$	Stop condition setup time	250	-	ns
t_{DHDL}	t_{BUF}	Time between Stop condition and next Startcondition	500	-	ns
t_{WLDL}(6)	$t_{SU:WC}$	WC set up time (before the Start condition)	0	-	μ s
t_{DHWH}(7)(2)	$t_{HD:WC}$	WC hold time (after the Stop condition)	1	-	μ s
t_W	t_{WR}	Write time	-	10	ms
t_{NS}(2)	-	Pulse width ignored (input filter on SCL and SDA)	-	80	ns

1. There is no min. or max. values for the input signal rise and fall times. It is however recommended by the I²C specification that the input signal rise and fall times be less than 120 ns when f_C < 1 MHz.
2. Characterized only, not tested in production.
3. With C_L = 10 pF
4. To avoid spurious Start and Stop conditions, a minimum delay is placed between SCL=1 and the falling or rising edge of SDA.
5. t_{CLQV} is the time (from the falling edge of SCL) required by the SDA bus line to reach either 0.3 V_{CC} or 0.7 V_{CC}.
6. WC=0 set up time condition to enable the execution of a WRITE command.
7. WC=0 hold time condition to enable the execution of a WRITE command.

Order information

Order Number	Package	Package Quantity	Marking On The park	Temperature
M24M02-DRMN6TP-TUDI	SOP8	Tape,Reel,4000	24M02DR	−40°C to +85°C
			24M02RD	

Revision history

	Date	Revision	Page
V1.0	2022/9	New	1-15
V1.1	2024/4	Update model and PDF template	1-24

Package SOP8

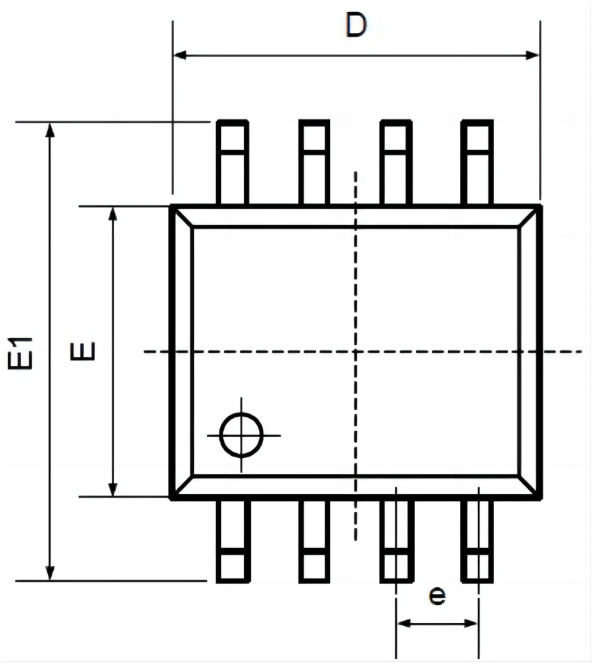

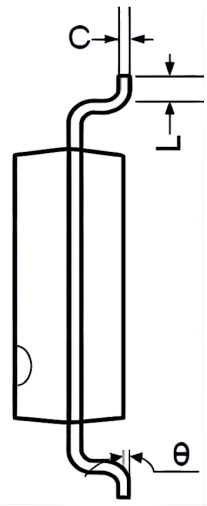

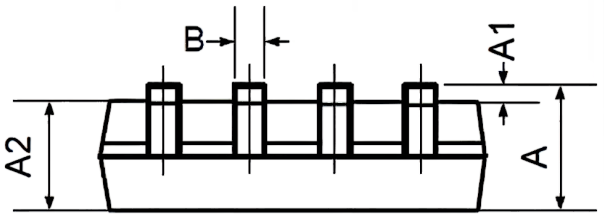

Symbol	Dimensions In Millimeters		Dimensions In Inches	
	Min	Max	Min	Max
A	1.350	1.750	0.053	0.069
A1	0.100	0.250	0.004	0.010
A2	1.350	1.550	0.053	0.061
B	0.330	0.510	0.013	0.020
C	0.190	0.250	0.007	0.010
D	4.780	5.000	0.188	0.197
E	3.800	4.000	0.150	0.157
E1	5.800	6.300	0.228	0.248
e	1.270TYP		0.050TYP	
L	0.400	1.270	0.016	0.050
θ	0°	8°	0°	8°

Important statement:

●TUDI Semiconductor reserves the right to modify the product manual without prior notice! Before placing an order, customers need to confirm whether the obtained information is the latest version and verify the completeness of the relevant information.

●Any semi-guide product is subject to failure or malfunction under specified conditions. It is the buyer's responsibility to comply with safety standards when using TUDI Semiconductor products for system design and whole machine manufacturing.And take the appropriate safety measures to avoid the potential in the risk of loss of personal injury or loss of property situation!

●TUDI Semiconductor products have not been licensed for life support, military, and aerospace applications,and therefore TUDI Semiconductor is not responsible for any consequences arising from the use of this product in these areas.

●If any or all TUDI Semiconductor products (including technical data, services) described or contained in this document are subject to any applicable local export control laws and regulations, they may not be exported without an export license from the relevant authorities in accordance with such laws.

●The specifications of any and all TUDI Semiconductor products described or contained in this document specify the performance, characteristics, and functionality of said products in their standalone state, but do not guarantee the performance, characteristics, and functionality of said products installed in Customer's products or equipment. In order to verify symptoms and conditions that cannot be evaluated in a standalone device, the Customer should ultimately evaluate and test the device installed in the Customer's product device.

●TUDI Semiconductor documentation is only allowed to be copied without any alteration of the content and with the relevant authorization.TUDI Semiconductor assumes no responsibility or liability for altered documents.

●TUDI Semiconductor is committed to becoming the preferred semiconductor brand for customers, and TUDI Semiconductor will strive to provide customers with better performance and better quallity products.