

钍地半导体
Tudi Semiconductor

Product Specification

TUDI-TJA1044

High-speed CAN transceiver with Standby mode

网址 www.sztdbdt.com

用芯智造·卓越品质

semiconductor device manufacturer

- Design
- research and development
- production
- and sales

Features

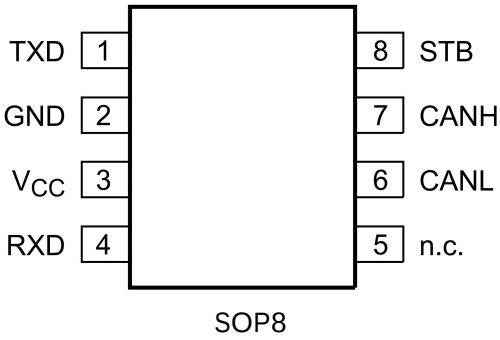

SOP8

- Fully ISO 11898-2:2016, SAE J2284-1 to SAE J2284-5 and SAE J1939-14 compliant
- Very low-current Standby mode with local and bus wake-up capability
- Optimized for use in 12 V automotive systems
- Low Electromagnetic Emission (EME) and high Electromagnetic Immunity (EMI), according to proposed EMC Standards IEC 62228 -3 and SAE J2962-2
- AEC-Q100 qualified
- Dark green product (halogen free and Restriction of Hazardous Substances (RoHS) compliant)
- Variants with a VIO pin allow for direct interfacing with 3.3V to 5V microcontrollers. Variants without a VIO pin can interface with 3.3V and 5V-supplied microcontrollers, provided the microcontroller I/Os are 5V tolerant.
- VIO and non-VIO variants are available in SO8
- Functional behavior predictable under all supply conditions
- Transceiver disengages from the bus (high-ohmic) when the supply voltage drops below the switch-off undervoltage threshold
- Transmit Data (TXD) dominant time-out functions
- Internal biasing of TXD and STB input pins
- Very low-current Standby mode with host and bus wake-up capability
- Variants with V_{IO} pin: CAN wake-up receiver powered by V_{IO} allowing V_{CC} to be shut down
- High ESD handling capability on the bus pins (8 kV IEC and HBM)
- Bus pins protected against transients in automotive environments
- Undervoltage detection on pins V_{CC} and V_{IO}
- Thermally protected
- Timing guaranteed for CAN FD data rates up to 5 Mbit/s

Description

The TJA1044 is part of the Mantis family of high-speed CAN transceivers. It provides an interface between a Controller Area Network (CAN) protocol controller and the physical two-wire CAN bus. The transceiver is designed for high-speed CAN applications in the automotive industry, providing the differential transmit and receive capability to (a microcontroller with) a CAN protocol controller.

The TJA1044 offers a feature set optimized for 12 V automotive applications, with significant improvements over NXP's first- and second-generation CAN transceivers, such as the TJA1040 and TJA1042, and excellent ElectroMagnetic Compatibility (EMC) performance.

Description（Continue）

These features make the TJA1044 an excellent choice for all types of HS-CAN, in nodes that require a low-power mode with wake-up capability via the CAN bus.
The TJA1044 implements the CAN physical layer as defined in ISO 11898-2:2016 and SAE J2284-1 to SAE J2284-5. The TJA1044T is specified for data rates up to 1 Mbit/s. Additional timing parameters defining loop delay symmetry are specified for the other variants. This implementation enables reliable communication in the CAN FD fast phase at data rates up to 5 Mbit/s. The TJA1044B and TJA1044C feature shorter propagation delay, supporting larger network topologies.

Table 1. Pin description

Symbol	Pin	Type(1)	Description
TXD	1	I	transmit data input
GND（2）	2	G	ground supply
Vcc	3	P	supply voltage
RXD	4	O	receive data output;reads out data from the bus lines
n.c.	5	-	not connected;TJA1044T variants
CANL	6	AIO	LOW-level CAN bus line
CANH	7	AIO	HIGH-level CAN bus line
STB	8	I	Standby mode control input

（1） I: digital input; O: digital output; AIO: analog input/output; P: power supply; G: ground.
（2） The GND pin must be soldered to board ground. For enhanced thermal and electrical performance, it is recommended that the exposed center pad also be soldered to board ground.

Table 2. Quick reference data

Symbol	Parameter	Conditions	Min	Typ	Max	Unit
Vcc	supply voltage		4.5	-	5.5	V
Icc	supply current	Standby mode				
		TJA1044T	-	10	15	μA
		variants with a V_{IO} pin	-	0.1	1	μA
		Normal mode				
		bus recessive	2	5	10	mA
		bus dominant	20	45	60	mA
$V_{uvd(stb)(VCC)}$	standby undervoltage detectionvoltage on pin Vcc		3.5	4	4.3	V
$V_{uvd(swof)(VCC)}$	switch-off undervoltagedetection voltage on pin Vcc	TJA1044T	1.3	2.4	3.4	V
V_{IO}	supply voltage on pin V_{IO}		2.91	-	5.5	V
I_{IO}	supply current on pin V_{IO}	Standby mode	-	10	16.5	μA
		Normal mode;bus recessive	10	17	30	μA
		Normal mode;bus dominant	-	170	300	μA
$V_{uvd(swoff)(VIO)}$	switch-off undervoltagedetection voltage on pin V_{IO}	variants with a V_{IO} pin	2.4	2.6	2.8	V
V_{ESD}	electrostatic discharge voltage	IEC61000-4-2 at pins CANH and CANL	-8	-	+8	kV
V_{CANH}	voltage on pin CANH	limiting value according to IEC60134	-42	-	+42	V
V_{CANL}	voltage on pin CANL	limiting value according to IEC60134	-42	-	+42	V
Tvj	virtual junction temperature		-40	-	+150	℃

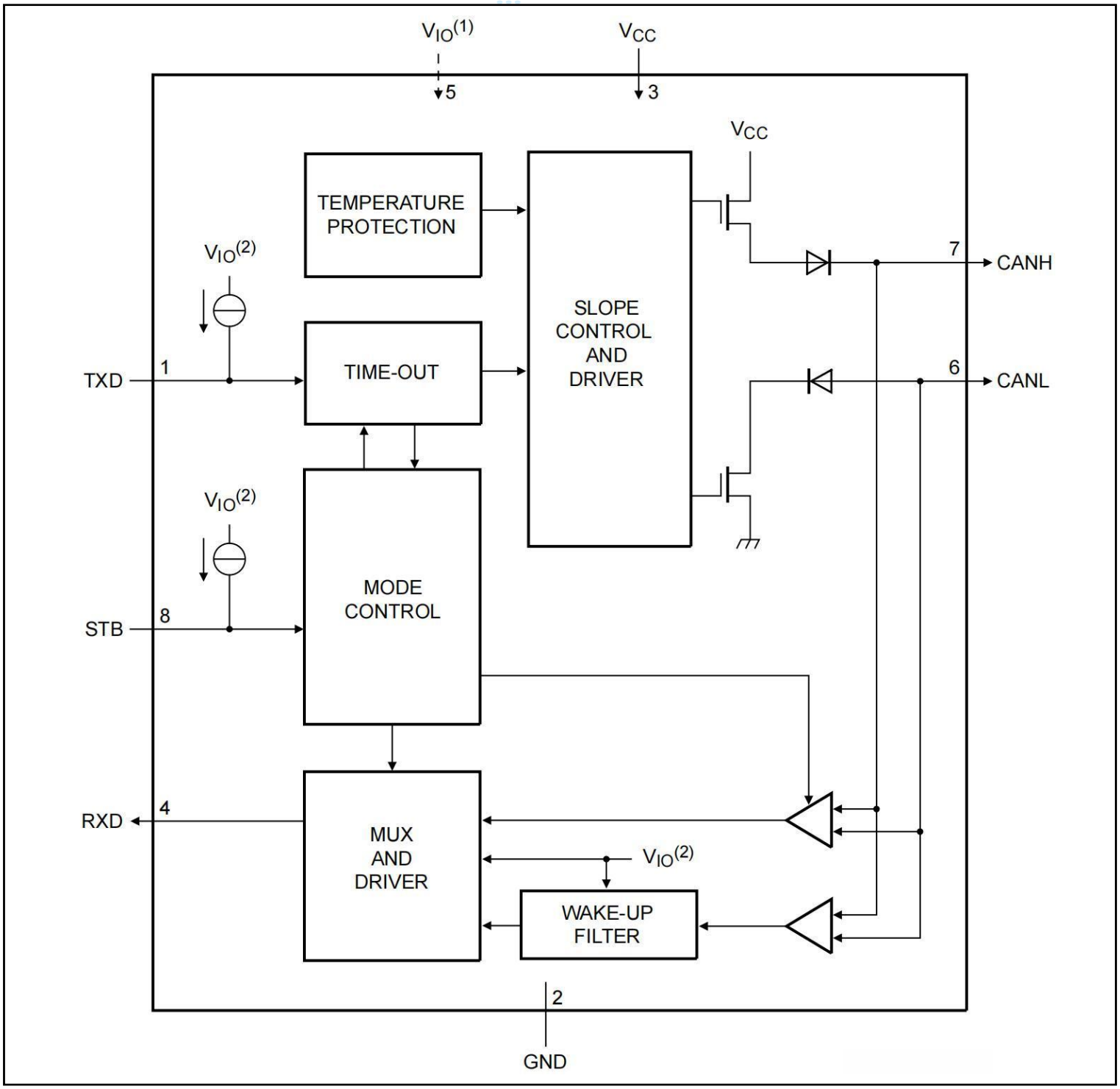

Figure 1.Block diagram

1. Pin 5 is not connected in non-V_{IO} product variants.
2. V_{IO} = V_{CC} in non-V_{IO} product variants.

Functional description

Table 3.Operating modes

The TJA1044 supports two operating modes, Normal and Standby. The operating mode is selected via pin STB. See Table 3 for a description of the operating modes under normal supply conditions.

Mode	Inputs		Outputs	
	Pin STB	Pin TXD	CAN driver	Pin RXD
Normal	LOW	LOW	dominant	LOW
		HIGH	recessive	LOW when bus dominant
				HIGH when bus recessive
Standby	HIGH	x(1)	biased to ground	follows BUS when wake-updetected
				HIGH when no wake-up detected

(1) ‘x’ = don’t care.

Normal mode：A LOW level on pin STB selects Normal mode. In this mode, the transceiver can transmit and receive data via the bus lines CANH and CANL (see Figure 1 for the block diagram). The differential receiver converts the analog data on the bus lines into digital data which is output on pin RXD. The slopes of the output signals on the bus lines are controlled internally and are optimized in a way that guarantees the lowest possible EME.

Standby mode：A HIGH level on pin STB selects Standby mode. In Standby mode, the transceiver is not able to transmit or correctly receive data via the bus lines. The transmitter and Normal-mode receiver blocks are switched off to reduce supply current, and only a low-power differential receiver monitors the bus lines for activity.
In Standby mode, the bus lines are biased to ground to minimize system supply current. The low-power receiver is supplied from V_{IO} (V_{CC} in non-V_{IO} variants) and can detect CAN bus activity even if V_{IO} is the only available supply voltage. Pin RXD follows the bus after a wake-up request has been detected. A transition to Normal mode is triggered when STB is forced LOW.

Remote wake-up (via the CAN bus)

The TJA1044 wakes up from Standby mode when a dedicated wake-up pattern (specified in ISO 11898-2:2016) is detected on the bus. This filtering helps avoid spurious wake-up events. A spurious wake-up sequence could be triggered by, for example, a dominant clamped bus or by dominant phases due to noise or spikes on the bus.

The wake-up pattern consists of:

- a dominant phase of at least $t_{wake(busdom)}$ followed by
- a recessive phase of at least $t_{wake(busrec)}$ followed by
- a dominant phase of at least $t_{wake(busdom)}$

Dominant or recessive bits between the above mentioned phases that are shorter than $t_{wake(busdom)}$ and $t_{wake(busrec)}$ respectively are ignored.
The complete dominant-recessive-dominant pattern must be received within $t_{to(wake)bus}$ to be recognized as a valid wake-up pattern (see Figure 2). Otherwise, the internal wake-up logic is reset. The complete wake-up pattern will then need to be retransmitted to trigger a wake-up event. Pin RXD remains HIGH until the wake-up event has been triggered.
After a wake-up sequence has been detected, the TJA1044 will remain in Standby mode with the bus signals reflected on RXD. Note that dominant or recessive phases lasting less than $t_{fltr(wake)bus}$ will not be detected by the low-power differential receiver and will not be reflected on RXD in Standby mode.

A wake-up event is not flagged on RXD if any of the following events occurs while a valid wake-up pattern is being received:

- The TJA1044 switches to Normal mode
- The complete wake-up pattern was not received within tto(wake)bus
- A V_{CC} or V_{IO} undervoltage is detected ($V_{CC} < V_{uvd(swoff)}(V_{CC})$ or $V_{IO} < V_{uvd(swoff)(VIO)}$

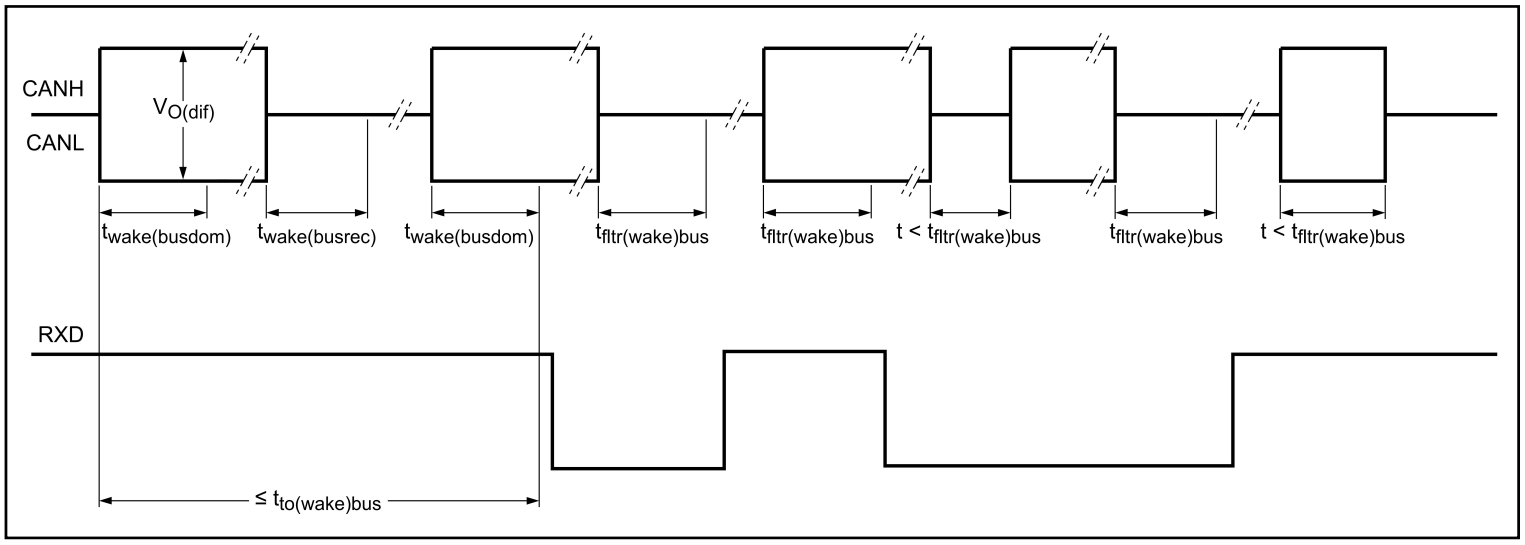

Figure 2.Wake-up timing

Fail-safe features

TXD dominant time-out function： A 'TXD dominant time-out' timer is started when pin TXD is set LOW. If the LOW state on this pin persists for longer than tto(dom)TXD, the transmitter is disabled, releasing the bus lines to recessive state. This function prevents a hardware and/or software application failure from driving the bus lines to a permanent dominant state (blocking all network communications). The TXD dominant time-out timer is reset when pin TXD is set HIGH.

Internal biasing of TXD and STB input pins： Pins TXD and STB have internal pull-ups to V_{CC} (V_{IO} for variants with a V_{IO} pin) to ensure a safe, defined state in case one or both of these pins are left floating. Pull-up currents flow in these pins in all states; both pins should be held HIGH in Standby mode to minimize supply current.

Undervoltage detection on pins Vcc and VIO： If V_{CC} drops below the standby undervoltage detection level, $V_{uvd(stb)(VCC)}$, the transceiver switches to Standby mode. The logic state of pin STB is ignored until V_{CC} has recovered.
In versions with a V_{IO} pin, if V_{IO} drops below the switch-off undervoltage detection level ($V_{uvd(swoff)(VIO)}$), the transceiver switches off and disengages from the bus (zero load) until V_{IO} has recovered.
In versions without a V_{IO} pin, if V_{CC} drops below the switch-off undervoltage detection level ($V_{uvd(swoff)(VCC)}$), the transceiver switches off and disengages from the bus (zero load) until V_{CC} has recovered.

Overtemperature protection： The output drivers are protected against overtemperature conditions. If the virtual junction temperature exceeds the shutdown junction temperature, $T_{j(sd)}$, both output drivers are disabled. When the virtual junction temperature drops below $T_{j(sd)}$ again, the output drivers recover once TXD has been reset to HIGH. Including the TXD condition prevents output driver oscillation due to small variations in temperature.

Limiting values

Table4. Limiting values

In accordance with the Absolute Maximum Rating System (IEC 60134); all voltages are referenced to ground.

Symbol	Parameter	Conditions	Min	Max	Unit
Vx	voltage on pin x11	on pins CANH,CANL	-42	+42	V
		on pin Vcc,Vio	-0.3	+7	V
		on any other pin（2）	-0.3	V_{IO}+0.3(3)	V
$V_{(CANH-CANL)}$	voltage between pin CANH andpin CANL		-27	+27	V
V_{trt}	transient voltage	on pins CANH and CANL（4）			
		pulse 1	-100	-	V
		pulse 2a	-	75	V
		pulse 3a	-150	-	V
		pulse 3b	-	100	V
V_{ESD}	electrostatic discharge voltage	IEC 61000-4-2(150 pF,330 Ω dischargecircuit)（5）			
		on pins CANH and CANL	-8	+8	kV
		Human Body Model (HBM)			
		on any pin（6）	-4	+4	kV
		on pins CANH and CANL（7）	-8	+8	kV
		Machine Model (MM);200 pF, 0.75μH,10Ω（8）			
		on any pin	-200	+200	V
		Charged Device Model (CDM)（9）			
		on corner pins	-750	+750	V
		on any other pin	-500	+500	V
T_{vj}	virtual junction temperature	(10)	-40	+150	℃
T_{stg}	storage temperature	(11)	-55	+150	℃

(1) The device can sustain voltages up to the specified values over the product lifetime, provided applied voltages (includingtransients) never exceed these values.
(2) Maximum voltage should never exceed 7 V.
(3) V_{CC} + 0.3 in the non-V_{IO} product variants.
(4) Verified by an external test house according to IEC TS 62228, ; parameters for standard pulses defined in ISO 7637.
(5) Verified by an external test house according to IEC TS 62228.
(6) According to AEC-Q100-002.
(7) Pins stressed to reference group containing all ground and supply pins, emulating the application circuits (Figure 5. HBM pulse as specified in AEC-Q100-002 used.

(8) According to AEC-Q100-003.
(9) According to AEC-Q100-011.
(10) In accordance with IEC 60747-1. An alternative definition of virtual junction temperature is: $T_{vj} = T_{amb} + P \times R_{th(vj-a)}$, where $R_{th(vj-a)}$ is a fixed value to be used for the calculation of T_{vj}. The rating for T_{vj} limits the allowable combinations of power dissipation (P) and ambient temperature (T_{amb}).
(11) T_{stg} in application according to IEC61360-4. For component transport and storage conditions, see instead IEC61760-2.

Table 5. Thermal characteristics

Value determined for free convection conditions on a JEDEC 2S2P board

Symbol	Parameter	Conditions	Typ	Unit
$R_{th(j-a)}$	thermal resistance from junction to ambient	SO8 package;in free air	94	K/W
ψ_{j-top}	thermal characterization parameter from junctionto top of package	SO8 package;in free air	13	K/W

Static characteristics

Table 6.Static characteristics

T_{vj} = -40 °C to +150 °C; V_{CC} = 4.5 V to 5.5 V; V_{IO} = 2.91 V to 5.5 V[1]; R_L = 60Ω ; C_L = 100 pF unless otherwise specified; all voltages are defined with respect to ground; positive currents flow into the IC.（2）

Symbol	Parameter	Conditions	Min	Typ	Max	Unit
Supply;pin Vcc						
Vcc	supply voltage		4.5	-	5.5	V
$V_{uva(stb)(VCC)}$	standby undervoltage detection voltage on pin Vcc	(3)	3.5	4	4.3	V
$V_{uvd(swof)(VCC)}$	switch-off undervoltage detection voltage on pin Vcc	TJA1044T(3)	1.3	2.4	3.4	V

Table 6.Static characteristics（Continued）

T_{vj} = -40 °C to +150 °C; V_{CC} = 4.5 V to 5.5 V; V_{IO} = 2.91 V to 5.5 V(1); R_L = 60Ω ; C_L = 100 pF unless otherwise specified; all voltages are defined with respect to ground; positive currents flow into the IC.（2）

Symbol	Parameter	Conditions	Min	Typ	Max	Unit
Icc	supply current	Standby mode				
		TJA1044T;V_{TXD}=Vcc	-	10	15	μA
		variants with a Vio pin; V_{TXD}=V_{IO}	-	0.1	1	μA
		Normal mode				
		recessive;V_{TXD}=V_{IO}(4)	2	5	10	mA
		dominant;V_{TXD}=0V	20	45	60	mA
		dominant;V_{TXD}=0V;short circuit on bus lines; -3V<(V_{CANH}=V_{CANL})<+18V	2	80	110	mA
IO level adapter supply;pin V_{IO}(1)						
V_{IO}	supply voltage on pin V_{IO}		2.91	-	5.5	V
I_{IO}	supply current on pin V_{IO}	Standby mode;V_{TXD}=VIO(4)	-	10	16.5	μA
		Normal mode				
		recessive;V_{TXD}=V_{IO}(4)	10	17	30	μA
		dominant;V_{TXD}=0V	-	170	300	μA
$V_{uvd(swof)(VIO)}$	switch-off undervoltage detection voltage on pin V_{IO}	variants with a V_{IO} pin(3)	2.4	2.6	2.8	V
Standby mode control input;pin STB						
V_{IH}	HIGH-level input voltage	variants with a V_{IO} pin	0.7V_{IO}	—	V_{IO}+0.3	V
		TJA1044T	2	-	Vcc+0.3	V
V_{IL}	LOW-level input voltage	variants with a V_{IO} pin	-0.3	-	+0.3V_{IO}	V
		TJA1044T	-0.3	-	+0.8	V
I_{IH}	HIGH-level input current	V_{STB}=V_{IO}(4)	-1	-	+1	μA
I_{IL}	LOW-level input current	V_{STB}=0V	-15	-	-1	μA

Table 6.Static characteristics (Continued)

T_{vj} = -40 °C to +150 °C; V_{CC} = 4.5 V to 5.5 V; V_{IO} = 2.91 V to 5.5 V(1); R_L = 60Ω ; C_L = 100 pF unless otherwise specified; all voltages are defined with respect to ground; positive currents flow into the IC.（2）

Symbol	Parameter	Conditions	Min	Typ	Max	Unit
CAN transmit data input;pin TXD						
V_{IH}	HIGH-level input voltage	variants with a V_{IO} pin	0.7V_{IO}	-	V_{IO}+0.3	V
		TJA1044T	2	—	Vcc+0.3	V
V_{IL}	LOW-level input voltage	variants with a V_{IO} pin	-0.3	—	+0.3V_{IO}	V
		TJA1044T	-0.3	-	+0.8	V
I_{IH}	HIGH-level input current	V_{TXD}=VIO(4)	-5	—	+5	μA
I_{IL}	LOW-level input current	V_{TXD}=0V;variants with a V_{IO} pin	-270	-150	-60	μA
		V_{TXD}=0V;variants without a V_{IO} pin	-270	-150	-65	μA
C_i	input capacitance	-5	-	5	10	pF
CAN receive data output;pin RXD						
I_{OH}	HIGH-level output current	V_{RXD}=VIO(4)-0.4V	-9	-3	-1	mA
I_{OL}	LOW-level output current	V_{RXD}=0.4V;bus dominant	1	-	12	mA
Bus lines;pins CANH and CANL						
$V_{O(dom)}$	dominant output voltage	V_{TXD}=0V;t<$t_{to(dom)TXD}$				
		pin CANH;R_L=50 Q to 65Ω	2.75	3.5	4.5	V
		pin CANL;R_L=50 Ωto 65Ω	0.5	1.5	2.25	V
$V_{dom(TX)sym}$	transmitter dominant voltage symmetry	$V_{dom(TX)sym}$=Vcc-V_{CANH}-V_{CANL}	-400	-	+400	mV
V_{TXsym}	transmitter voltage symmetry	V_{TXsym}=V_{CANH}+V_{CANL};(5) f_{TXD}=250 kHz,1MHz and2.5 MHz;(6) C_{SPLIT}=4.7 nF	0.9Vcc	-	1.1Vcc	V

Table 6.Static characteristics (Continued)

T_{vj} = -40 °C to +150 °C; V_{CC} = 4.5 V to 5.5 V; V_{IO} = 2.91 V to 5.5 V(1); R_L = 60Ω ; C_L = 100 pF unless otherwise specified; all voltages are defined with respect to ground; positive currents flow into the IC.（2）

Symbol	Parameter	Conditions	Min	Typ	Max	Unit
$V_{IO(dif)}$	differential outputvoltage	dominant;Normal mode;V_{TXD}=0V; t<$t_{to(dom)TXD}$				
		R_L=50Ω to 65Ω	1.5	-	3	V
		R_L=45Ω to 70Ω	1.4	-	3.3	V
		R_L=2240Ω	1.5	-	5	V
		recessive				
		Normal mode:V_{TXD}=V_{IO}(4);no load	-50	-	+50	mV
		Standby mode;no load	-0.2	-	+0.2	V
$V_{IO(rec)}$	recessive output voltage	Normal mode;V_{TXD}=V_{IO}(4) ;no load	2	0.5Vcc	3	v
		Standby mode;no load	-0.1	-	+0.1	V
$V_{th(RX)dif}$	differential receiverthreshold voltage	-12V≤V_{CANL}≤+12V; -12V≤V_{CANH}≤+12V				
		Normal mode	0.5	—	0.9	v
		Standby mode	0.4	-	1.15	V
$V_{rec(RX)}$	receiver recessive voltage	-12V≤V_{CANL}≤+12V; -12V≤V_{CANH}≤+12V				
		Normal mode(5)	-4	—	+0.5	V
		Standby mode(5)	-4	-	+0.4	V
$V_{dom(RX)}$	receiver dominant voltage	-12V≤V_{CANL}≤+12V; -12V≤V_{CANH}≤+12V				
		Normal mode(5)	0.9	—	9.0	V
		Standby mode(5)	1.15	-	9.0	V
$V_{hys(RX)dif}$	differential receiverhysteresis voltage	-12V≤V_{CANL}≤+12V; -12V≤V_{CANH}≤+12V;Normal mode	50	-	300	mV

Table 6.Static characteristics (Continued)

T_{vj} = -40 °C to +150 °C; V_{CC} = 4.5 V to 5.5 V; V_{IO} = 2.91 V to 5.5 V(1); R_L = 60Ω ; C_L = 100 pF unless otherwise specified; all voltages are defined with respect to ground; positive currents flow into the IC.（2）

Symbol	Parameter	Conditions	Min	Typ	Max	Unit
$I_{O(sc)dom}$	dominant short-circuit output current	V_{TXD}=0V;t<$t_{to(dom)TXD}$;Vcc=5V				
		pin CANH;V_{CANH}=-15V to+40V	-100	-70	—	mA
		pin CANL;V_{CANL}=-15V to+40V	-	70	100	mA
$I_{O(sc)rec}$	recessive short-circuit output current	Normal mode;V_{TXD}=V_{IO}(4); V_{CANH}=V_{CANL}=-27V to+32V	-5	-	+5	mA
I_L	leakage current	Vcc=VII=0V or Vcc=V_{IO}=shorted to GND via 47kΩ; V_{CANH}=V_{CANL}=5V	-5	-	+5	μA
R_i	input resistance	-2V≤V_{CANL}≤+7V;(5) -2V≤V_{CANH}≤+7V	9	15	28	kΩ
△R_i	input resistance deviation	0V≤V_{CANL}≤+5V;(5) 0V≤V_{CANH}≤+5V	-3	-	+3	%
$R_{i(dif)}$	differential input resistance	-2V≤V_{CANL}≤+7V;(5) -2V≤V_{CANH}≤+7V	19	30	52	kΩ
$C_{i(cm)}$	common-mode input capacitance	(5)	-	-	20	pF
$C_{i(dif)}$	differential input capacitance	(5)	-	-	10	pF
Temperature detection						
$T_{j(sd)}$	shutdown junction temperature	(5)	-	185	-	℃

(1)All circuits shall be connected to VCC.
(2) All parameters are guaranteed over the virtual junction temperature range by design. Factory testing uses correlated test conditions to cover the specified temperature and power supply voltage range.
(3) Undervoltage is detected between min and max values. Undervoltage is guaranteed to be detected below min value and guaranteed not to be detected above max value.
(4) V_{IO} = V_{CC} in non-V_{IO} product variants.
(5) Not tested in production; guaranteed by design.
(6) The test circuit used to measure the bus output voltage symmetry and the common-mode voltages (which includes C_{SPLIT}) is shown in Figure 7.

Table 7.Dynamic characteristics

T_{vj} = -40 °C to +150 °C; V_{CC} = 4.5 V to 5.5 V; V_{IO} = 2.91 V to 5.5 V(1); R_L = 60Ω; C_L = 100 pF unless specified otherwise; all voltages are defined with respect to ground.(2)

Symbol	Parameter	Conditions	Min	TYP	MAX	Unit
Transceiver timing;pins CANH,CANL,TXD and RXDsee Figure 3,Figure 4 and Figure 6						
$t_{d(TXD-busdom)}$	delay time from TXD to bus dominant	TJA1044T;Normal mode	-	65	100	ns
$t_{d(TXD-busrec)}$	delay time from TXD to busrecessive	TJA1044T;Normal mode	-	90	100	ns
$t_{d(busdom-RXD)}$	delay time from bus dominant to RXD	TJA1044T;Normal mode	-	60	140	ns
$t_{d(busrec-RXD)}$	delay time from bus recessive to RXD	TJA1044T;Normal mode	-	65	125	ns
$t_{d(TXDL-RXDL)}$	delay time from TXD LOW to RXD LOW	TJA1044T;Normal mode	50	-	230	ns
$t_{d(TXDH-RXDH)}$	delay time from TXD HIGH to RXD HIGH	TJA1044T;Normal mode	50	-	230	ns
$t_{to(dom)TXD}$	TXD dominant time-out time	V_{TXD}=0V;Normal mode(4)	0.8	3	6.5	ms
$t_{d(stb-norm)}$	standby to normal mode delay time	(5)	7	25	47	μS
$t_{wake(busdom)}$	bus dominant wake-up time	Standby mode(6)				
		TJA1044T	0.5	-	3	μS
		all other variants	0.5	-	1.8	μS
$t_{wake(busrec)}$	bus recessive wake-up time	Standby mode(6)				
		TJA1044T	0.5	-	3	μS
		all other variants	0.5	-	1.8	μS
$t_{d(wake)bus}$	bus wake-up time-out time	Standby mode(4)	0.8	3	6.5	ms
$t_{fltr(wake)bus}$	bus wake-up filter time	Standby mode(7)				
		TJA1044T(7)	0.5	1	3	μs

(1) All circuits shall be connected to VCC.

(2) All parameters are guaranteed over the junction temperature range by design. Factory testing uses correlated test conditions to cover the specified temperature and power supply voltage range.

(3)See Figure 4.
(4) Time-out occurs between the min and max values. Time-out is guaranteed not to occur below the min value; time-out is guaranteed to occur above the max value.
(5) Standby-to-Normal mode transition occurs between the min and max values. It is guaranteed not to occur below the min value; it is guaranteed to occur above the max value.
(6) A dominant/recessive phase shorter than the min value is guaranteed not be seen as a dominant/recessive bit; a dominant/recessive phase longer than the max value is guaranteed to be seen as a dominant/recessive bit.
[(7) Pulses shorter than the min value are guaranteed to be filtered out; pulses longer than the max value are guaranteed to be processed.

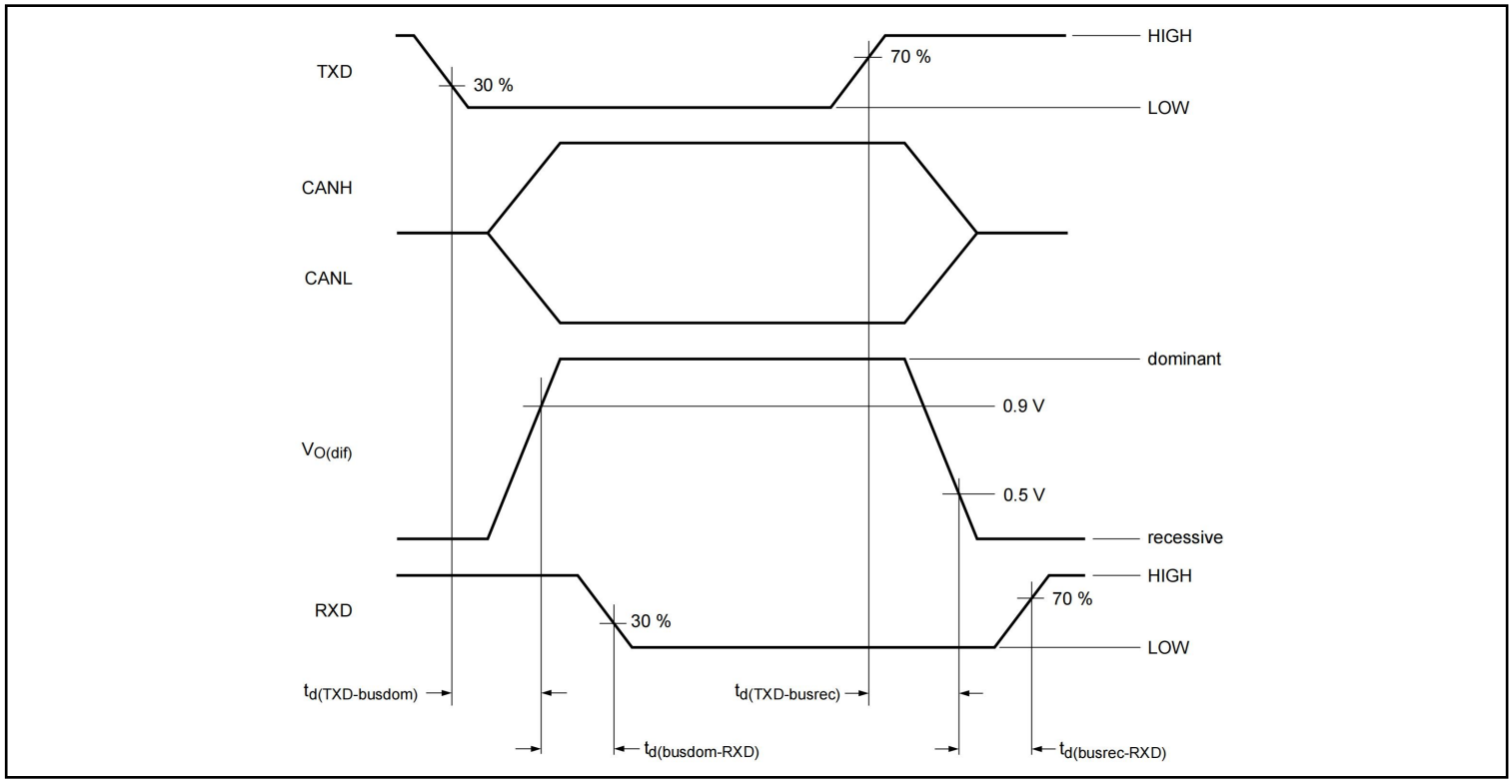

Figure 3. CAN transceiver timing diagram

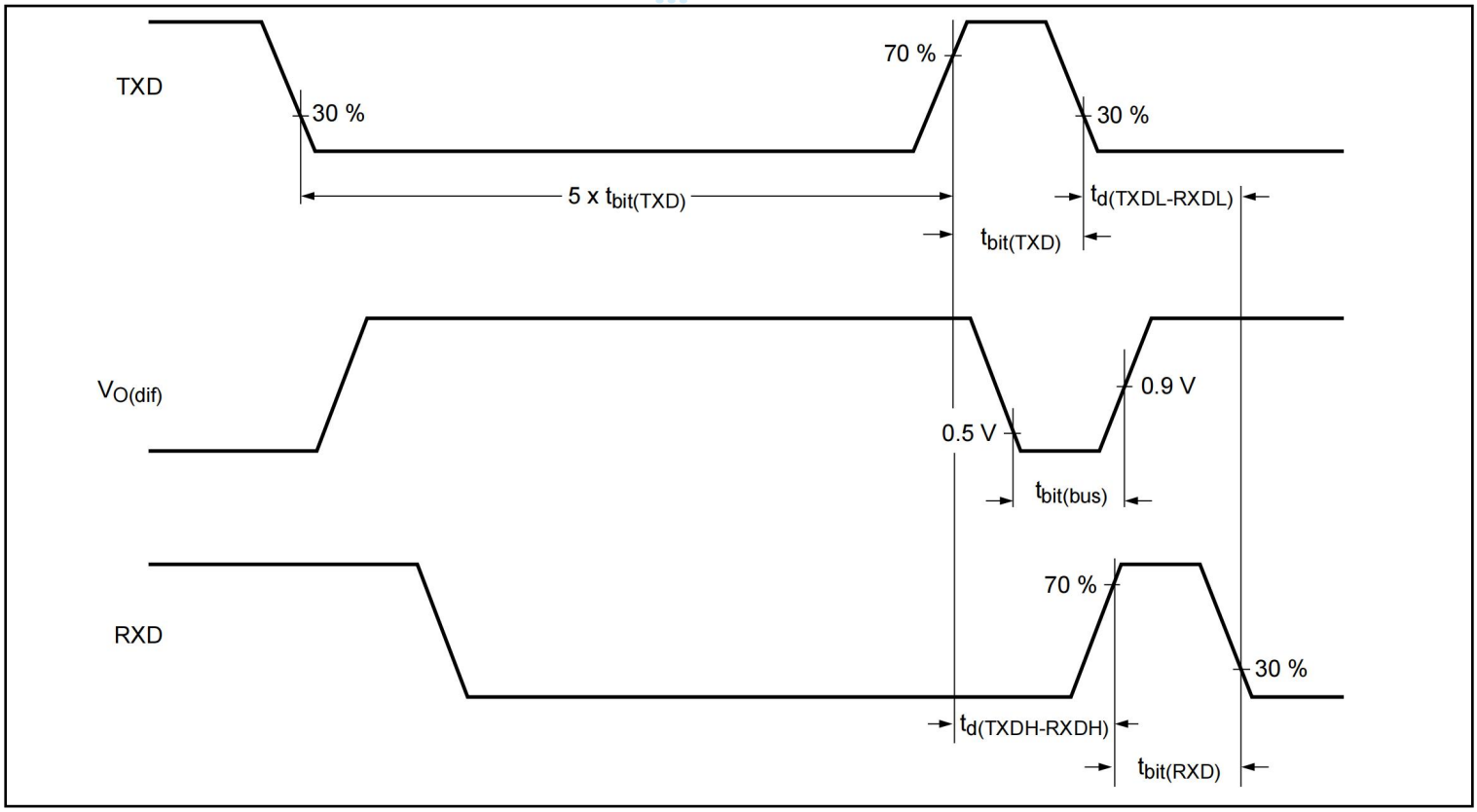

Figure 4. CAN FD timing definitions according to ISO 11898-2:2016

Application information

The minimum external circuitry needed with the TJA1044T is shown in Figure 5 . See the Application Hints for further information about external components and PCB layout requirements.

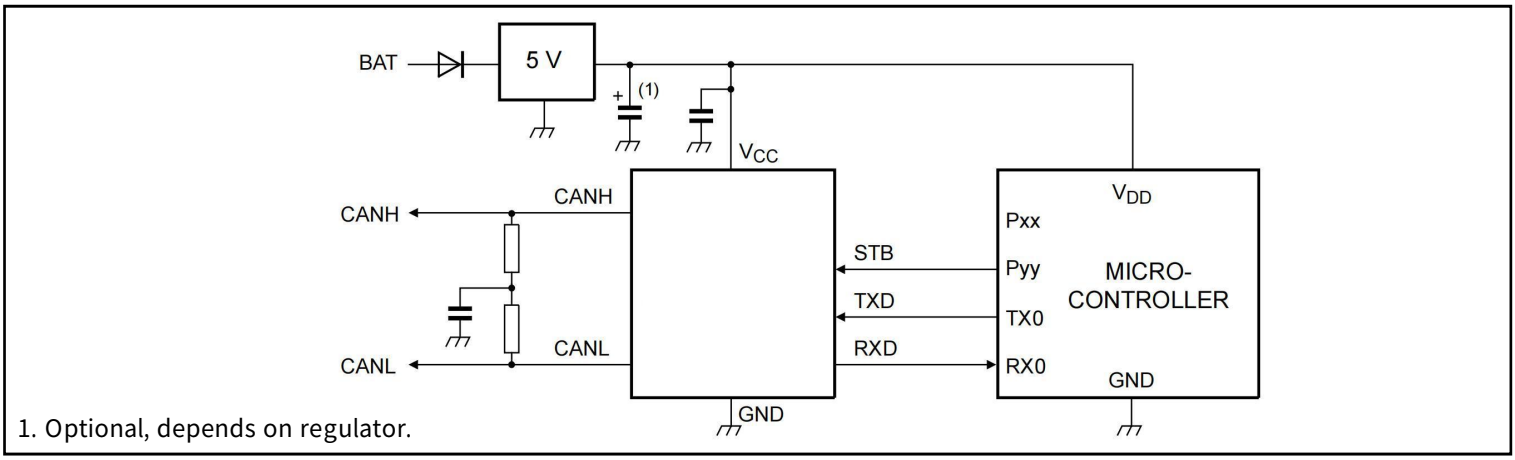

Figure 5. Typical TJA1044T application with a 5V microcontroller (non-V variants)

Test information

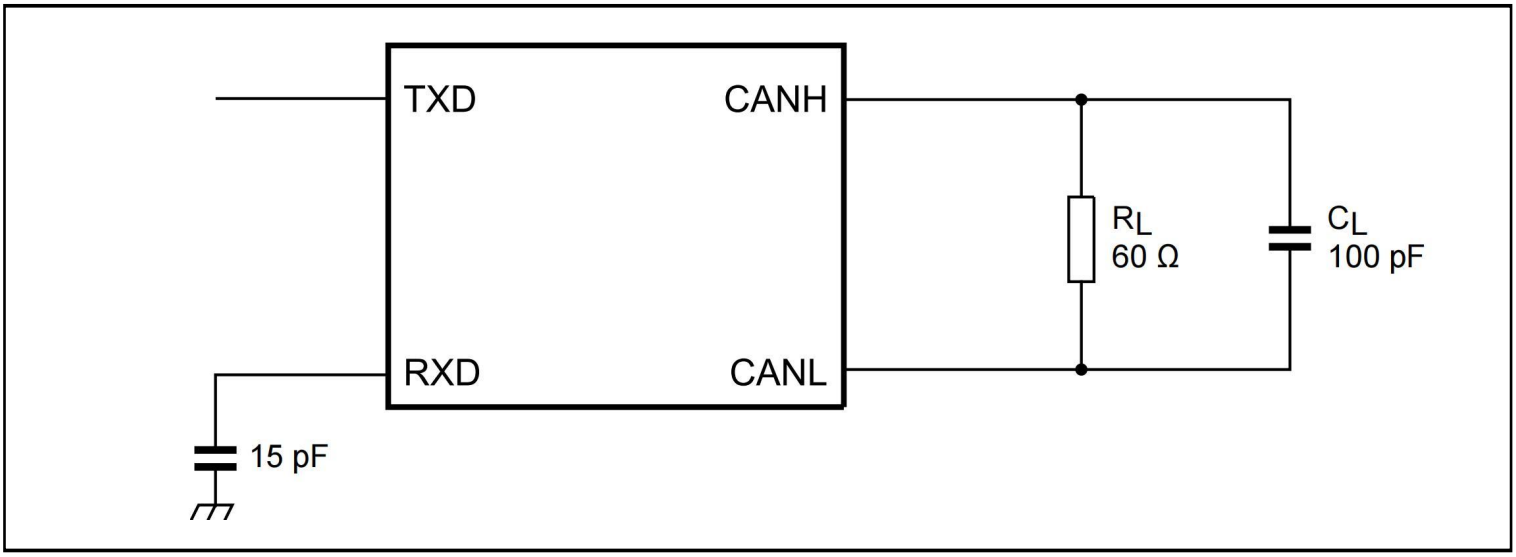

Figure 6.CAN transceiver timing test circuit

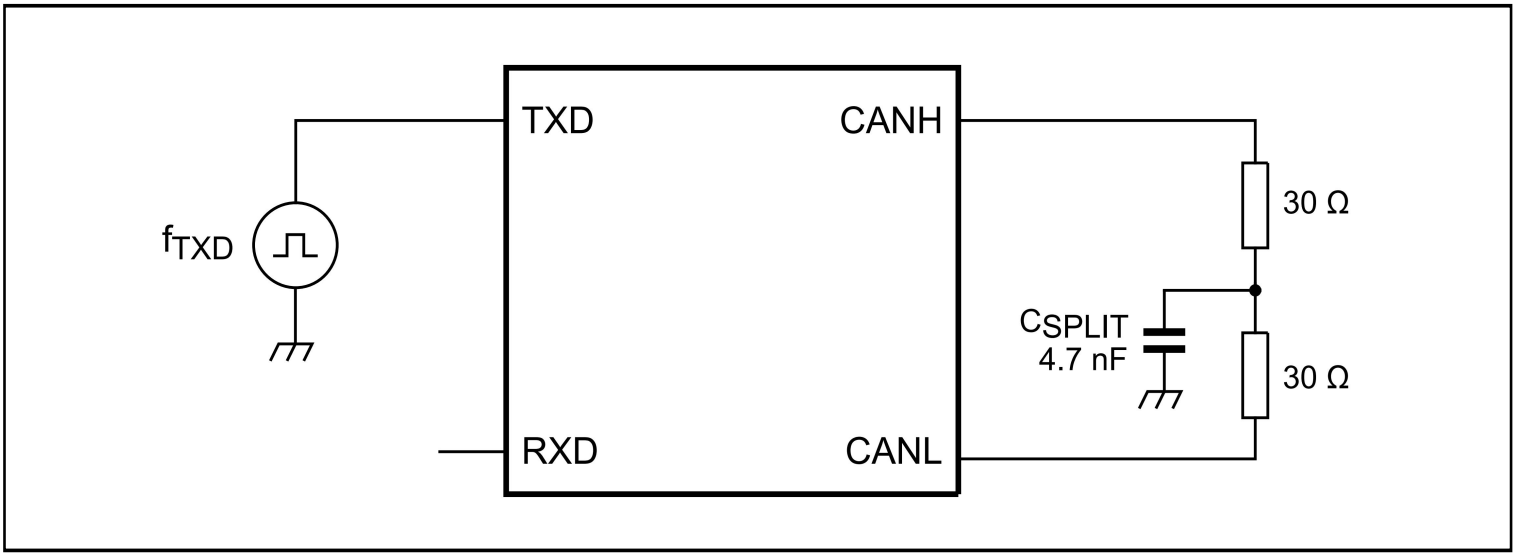

Figure 7.Test circuit for measuring transceiver transmitter driver symmetry

Order information

Order Number	Package	Package Quantity	Marking On The park	Temperature
TJA1044T/1-TUDI	SOP8	Tape,Reel,4000	TD1044 TJA1044	−40 to +125 °C

Revision history

	Date	Revision	Page
V1.0	2021/12	New	1-10
V1.1	2025/3	Update model and PDF template	1-21

Package SOP8

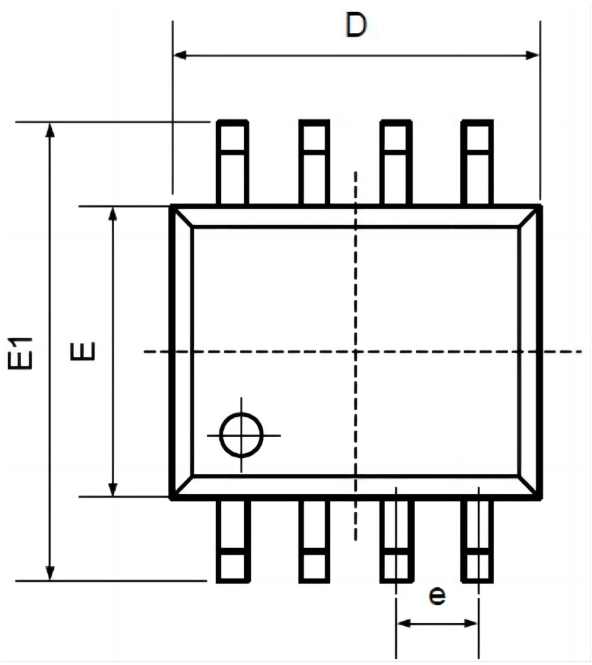

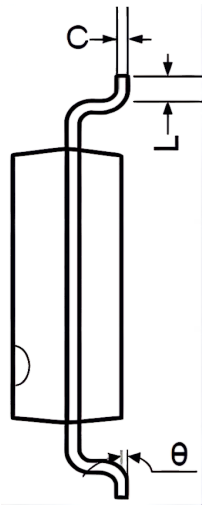

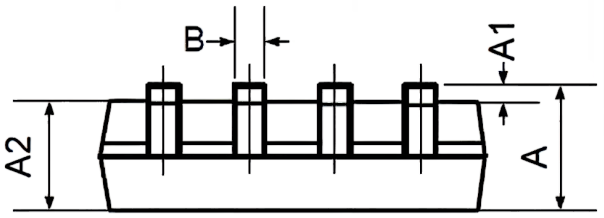

Symbol	Dimensions In Millimeters		Dimensions In Inches	
	Min	Max	Min	Max
A	1.350	1.750	0.053	0.069
A1	0.100	0.250	0.004	0.010
A2	1.350	1.550	0.053	0.061
B	0.330	0.510	0.013	0.020
C	0.190	0.250	0.007	0.010
D	4.780	5.000	0.188	0.197
E	3.800	4.000	0.150	0.157
E1	5.800	6.300	0.228	0.248
e	1.270TYP		0.050TYP	
L	0.400	1.270	0.016	0.050
θ	0°	8°	0°	8°

Important statement:

●TUDI Semiconductor reserves the right to modify the product manual without prior notice! Before placing an order, customers need to confirm whether the obtained information is the latest version and verify the completeness of the relevant information.

●Any semi-guide product is subject to failure or malfunction under specified conditions. It is the buyer's responsibility to comply with safety standards when using TUDI Semiconductor products for system design and whole machine manufacturing.And take the appropriate safety measures to avoid the potential in the risk of loss of personal injury or loss of property situation!

●TUDI Semiconductor products have not been licensed for life support, military, and aerospace applications,and therefore TUDI Semiconductor is not responsible for any consequences arising from the use of this product in these areas.

●If any or all TUDI Semiconductor products (including technical data, services) described or contained in this document are subject to any applicable local export control laws and regulations, they may not be exported without an export license from the relevant authorities in accordance with such laws.

●The specifications of any and all TUDI Semiconductor products described or contained in this document specify the performance, characteristics, and functionality of said products in their standalone state, but do not guarantee the performance, characteristics, and functionality of said products installed in Customer's products or equipment. In order to verify symptoms and conditions that cannot be evaluated in a standalone device, the Customer should ultimately evaluate and test the device installed in the Customer's product device.

●TUDI Semiconductor documentation is only allowed to be copied without any alteration of the content and with the relevant authorization.TUDI Semiconductor assumes no responsibility or liability for altered documents.

●TUDI Semiconductor is committed to becoming the preferred semiconductor brand for customers, and TUDI Semiconductor will strive to provide customers with better performance and better quallity products.