0.35mm Pitch, 2.0mm Depth, 0.6mm Stacking Height Multi-RF Compatible Board-to-Board Connector

BM46 Series



■Features

1. **Multi-RF capable Board-to-Board connector, World's smallest width class**
   Pitch : 0.35mm, Width : 2.0mm, Stacking height : 0.6mm
2. **Contact design ideal for both high speed digital transmission and RF signal**
3. **Superior RF Signal Transmission**
   V.S.W.R. 0-3GHz : 1.3 Max.
   3-6GHz : 1.4 Max.
   6-12GHz : 1.6 Max.
4. **Center shield prevents signal noise between opposing rows**
5. **Robust metal mating guides**

■Applications

Thin devices such as cell phones, tablet PCs, routers, etc. that require space-saving components.

Conventional Internal Connection

RF connection : RF cable + RF connector
Other connections : FPC + Board-to-Board connector

New Proposed Design

Connect RF and other signals with FPC and Board-to-Board

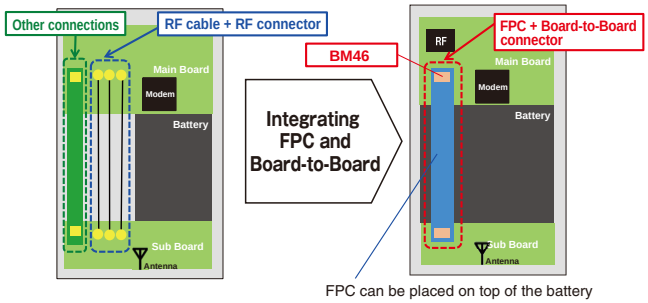

■Environmental

- **Halogen-free***

  In accordance with IEC 61249-2-21
  Br : 900ppm max, Cl : 900ppm max
  Br+Cl : 1500ppm max

Space-saving

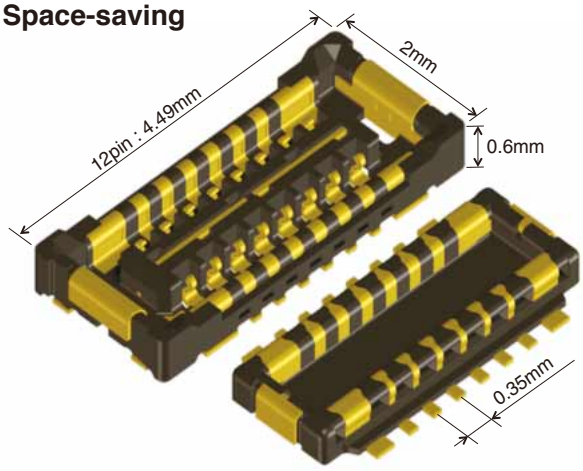

Conventional Connection

1 Board-to-Board Connector + 2 RF Connectors

BM46

Support multiple RF and digital signals with 1 Board-to-Board connector

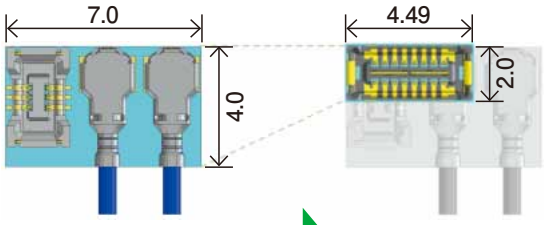

PCB Mounting Space **28mm²** → **68% Size Reduction** → PCB Mounting Space **8.98mm²**

Noise Prevention Design : Center Shield

EMI Stimulation Result

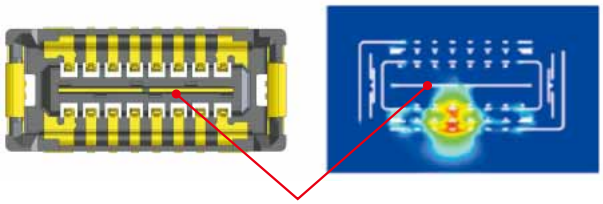

Center Shield

Metal Guide Design

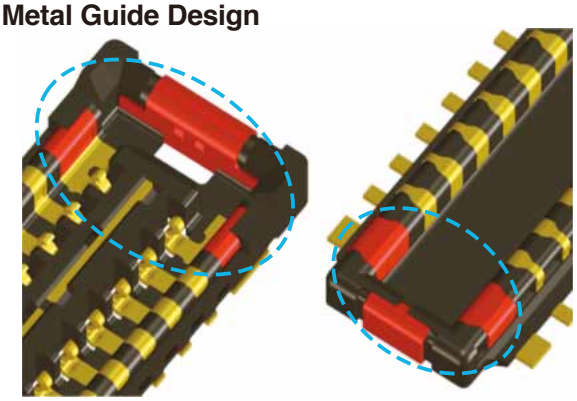

Apr.1.2024 Copyright 2024 HIROSE ELECTRIC CO., LTD. All Rights Reserved.

■Product Specifications

Rated Current : Signal Contact : 0.3A	Operating Temperature : -55 to +85℃ (Note 1)	Storage Temperature Range : -10 to +60℃
Rated Voltage 30V AC/DC	Operating Humidity Range : 90% RH Max. (Note 3)	Operating Humidity Range : 90% RH Max. (Note 2, 3)
Characteristic Impedance : 50Ω	Rated Frequency : DC to 12 GHz	

Item	Specifications	Conditions
1. Contact Resistance	Signal Contact 100mΩ Max.	Measured at 20mV AC, 1kHz, and 1mA
2. Insulation Resistance	100MΩ Min.	Measured at 100V DC
3. Withstanding Voltage	No flashover or dielectric breakdown	150V AC for 1 minute
4. Mating Durability	Signal Contact 100mΩ Max.	10 Mating Cycles
5. Vibration	No electrical discontinuity of 1μs or more.	Frequency : 10 to 55Hz ; half amplitude of 0.75mm,10 cycles in each of 3 axis directions for 5 minutes/cycle, 30 cycles total
6. Shock Resistance	No electrical discontinuity of 1μs or more.	Acceleration : 490m/s², duration : 11ms, 3-axis half sine wave in both directions, 3 cycles for each
7. Humidity	Signal Contact : 100mΩ Max. Insulation Resistance : 50MΩ Min.	Left for 96 hours at a temperature of 40 ±2℃ and a humidity range from 90 to 95%
8. Temperature Cycle	Signal Contact : 100mΩ Max. Insulation Resistance : 100MΩ Min.	-55±3℃ : 30 minutes → 85±2℃ : 30 minutes, 5 cycles
9. Solder Heat Resistance	No dissolution or melting of the resin that will affect performance.	Reflow : with recommended temperature profile ; Hand soldering at soldering iron temperature of 350℃ for 3 seconds max.
10. V.S.W.R.	1.3 Max. 1.4 Max. 1.6 Max.	0-3GHz 3-6GHz 6-12GHz

Note 1 : Includes temperature rise caused by current flow.
Note 2 : Storage refers to long-term-storage of unused items before they are mounted on the PCB.
Operating temperature and humidity range apply when the product is not powered after PCB mounting and when temporarily stored during transportation.
Note 3 : Use without condensation.

■Materials/ Finish

Product	Part	Materials	Finish	UL Regulation
Header / Receptacle	Insulator	LCP	Black	UL94V-0
	Contact	Phosphor Bronze	Gold Plated	—

■Product Number Structure

Refer to the chart below when determining the product specifications from the product number.
Please select from the product numbers listed in this catalog when placing orders.

●Header / Receptacle

BM46 B - ＊ DP - 0.35 V (＊＊)
❶ ❷ ❸ ❹ ❺ ❻

❶Series Name	: BM46
❷No. of Signal Contacts	: 12
❸Connector Type	DP : Header DS : Receptacle
❹Contact Pitch	: 0.35mm
❺Termination Type	: Straight SMT
❻Gold plating and packaging conditions (51) : Gold plating Embossed tape packaging (20,000 pcs/reel) (53) : Gold plating Embossed tape packaging (1,000 pcs/reel)	

Apr.1.2024 Copyright 2024 HIROSE ELECTRIC CO., LTD. All Rights Reserved.

■Header

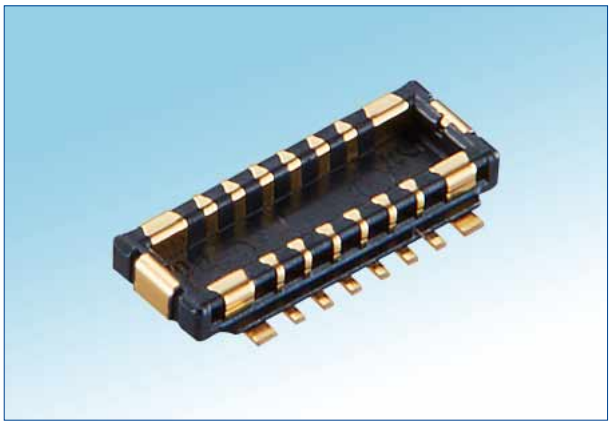

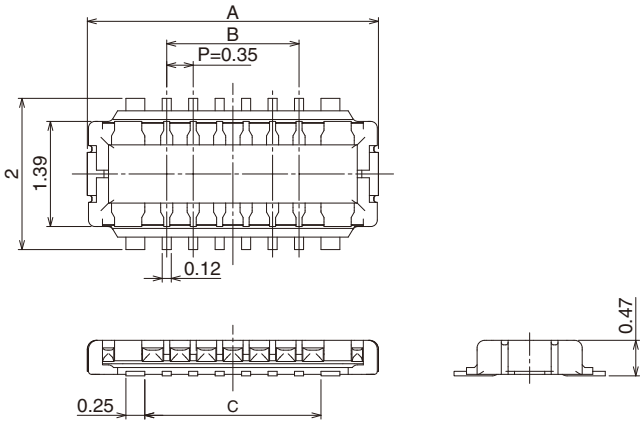

■Recommended PCB Layout

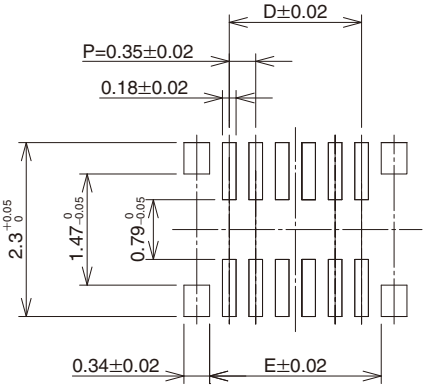

■Recommended Metal Mask Dimensions (Mask Thickness : 80μm)

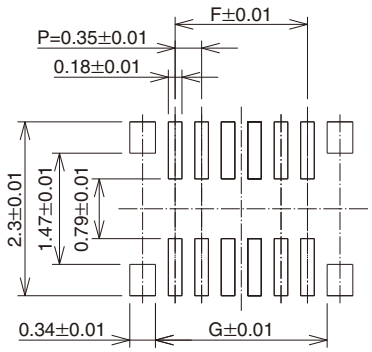

Part No.	HRS No.	No. of contacts	A	B	C	D	E	F	G
BM46B-12DP-0.35V(**)	673-7055-0 **	12	3.85	1.75	2.33	1.75	2.27	1.75	2.27

Note 1 : Please place orders in full reel quantities.
Note 2 : This connector has no polarity.

Apr.1.2024 Copyright 2024 HIROSE ELECTRIC CO., LTD. All Rights Reserved.

■Receptacle

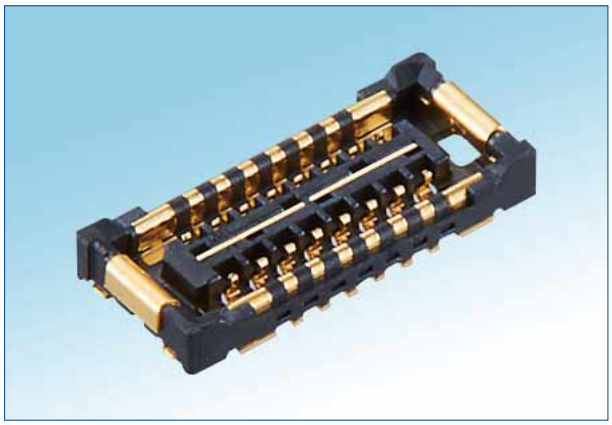

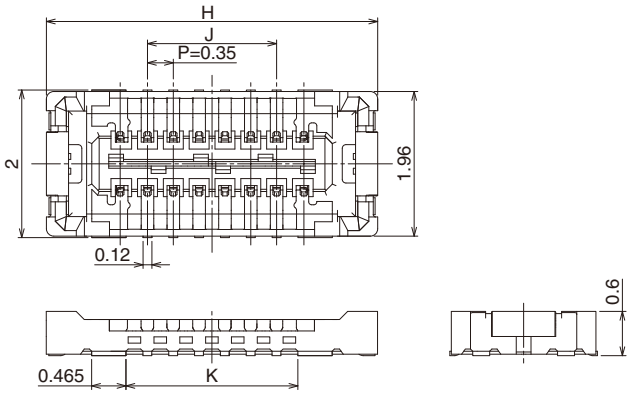

■Recommended PCB Layout

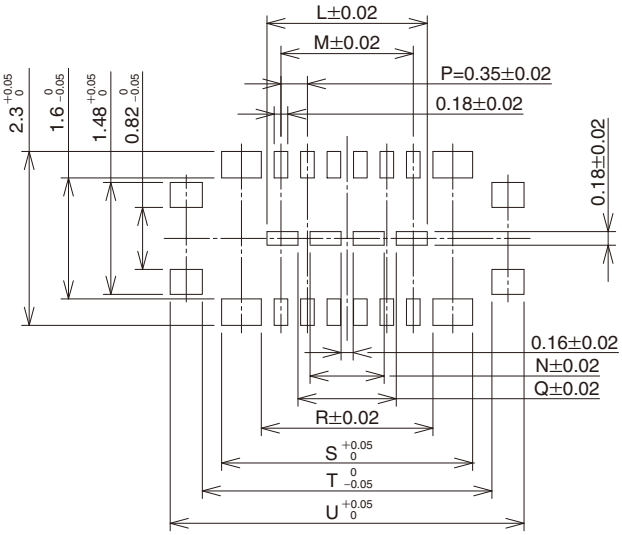

■Recommended Metal Mask Dimensions (Mask Thickness : 80µm)

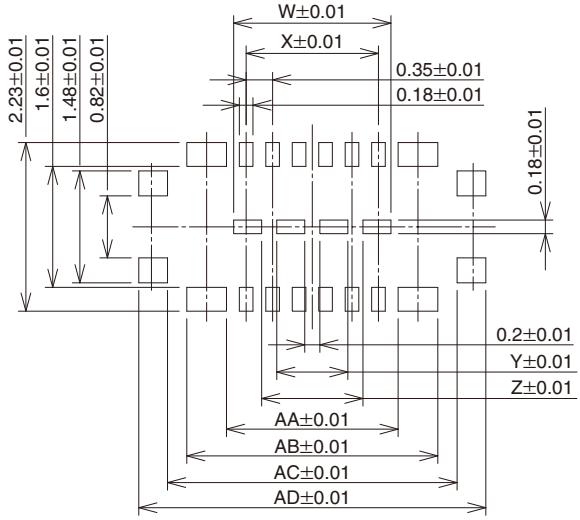

Part No.	HRS No.	No. of contacts	H	J	K	L	M	N	Q	R	S	T
BM46B-12DS-0.35V(**)	673-7054-0 **	12	4.49	1.75	2.33	2.12	1.75	0.98	1.3	2.27	3.32	3.83
			U	W	X	Y	Z	AA	AB	AC	AD	
			4.68	2.08	1.75	0.94	1.34	2.27	3.32	3.83	4.59	

Note 1 : Please place orders in full reel quantities.
Note 2 : This connector has no polarity.

Apr.1.2024 Copyright 2024 HIROSE ELECTRIC CO., LTD. All Rights Reserved.

■Embossed Tape Dimensions (IEC 60286-3, JIS C 0806)

●Header

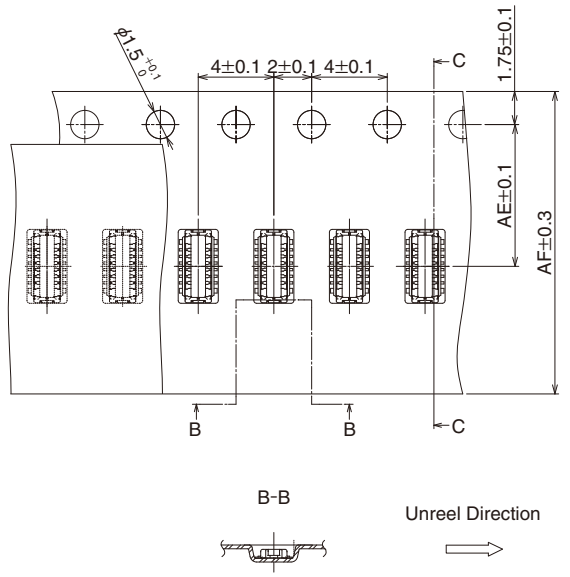

●Reel Dimensions

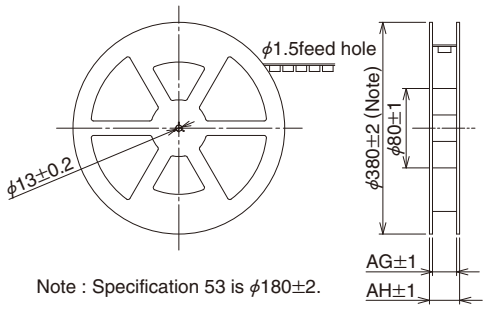

Note : Specification 53 is φ180±2.

Part No.	No. of Contacts	AE	AF	AG	AH
BM46B-12DP-0.35V(**)	12	7.5	16	17.4	21.4

■Embossed Tape Dimensions (IEC 60286-3, JIS C 0806)

●Receptacle

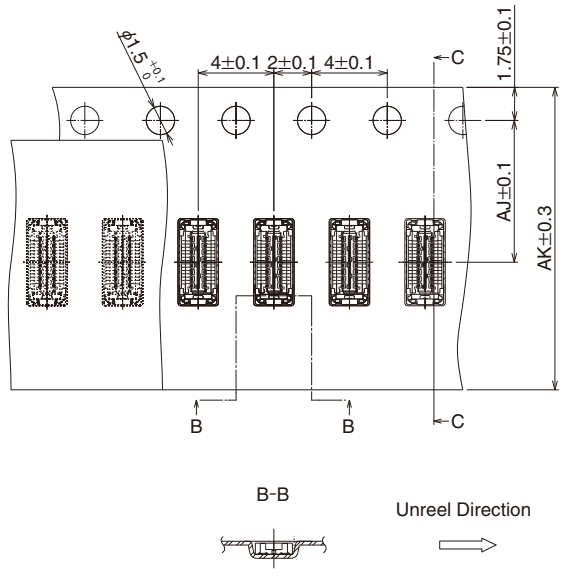

●Reel Dimensions

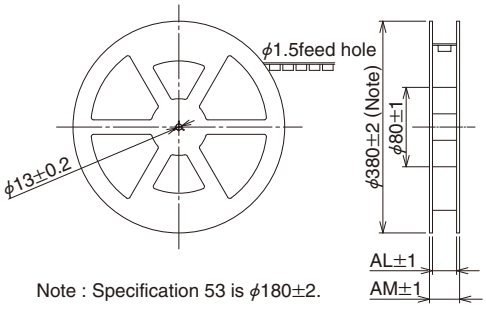

Note : Specification 53 is φ180±2.

Part No.	No. of Contacts	AJ	AK	AL	AM
BM46B-12DS-0.35V(**)	12	7.5	16	17.4	21.4

Apr.1.2024 Copyright 2024 HIROSE ELECTRIC CO., LTD. All Rights Reserved.

◆Precautions

1. Recommended Solder Temperature Profile	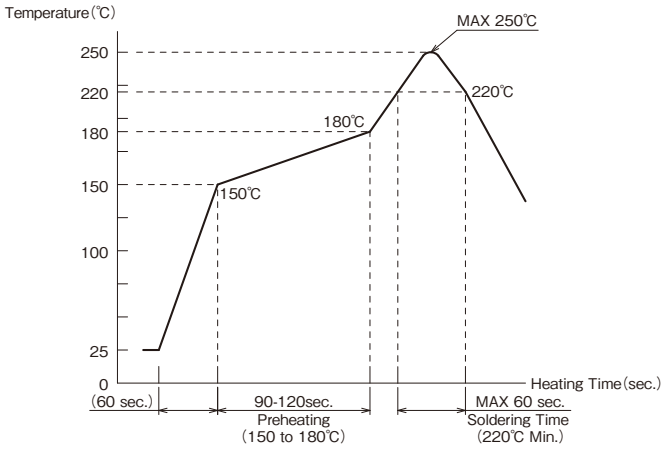 [Conditions] 1. Peak temperature : Maximum of 250℃ 2. Heating : 220℃ min., within 60 sec 3. Preheating : 150 to 180℃, 90 to 120 sec 4. Number of Reflow Cycles : Maximum of 2 cycles Note 1 : The temperature refers to the surface temperature of the PCB near the connector lead. Note 2 : When using nitrogen reflow, oxygen concentration must be 1000 [ppm] or more for mounting. If it is less than 1000 [ppm], please contact a Hirose representative.
2. Recommended Manual Soldering Conditions	Soldering iron temperature : 340 ± 10°C ; Soldering time : within 3 seconds
3. Recommended Stencil Thickness and Open Area to PCB Pattern Area Ratio	Thickness : 0.08mm Aperture Ratio : Receptacle Side : 100%, Header Side:100%
4. Board Warpage	A maximum of 0.02mm at the center of the connector relative to each end of the connector.
5. Cleaning Conditions	Cleaning is not recommended. If you clean this product, please evaluate its performance before using it. (Cleaning may impair the mating/unmating properties and lower resistance to environmental factors)
6. Precautions	■Care should be taken when mating/unmating the connector when it is not mounted on the PCB as it may cause damage/ deformation to contacts. ■Avoid supporting the PCB only with the connectors. Support it by other means such as bolts, screws, posts, etc. ■Excessive prying during unmating/mating may result in damage. ■In the case of hand soldering, please do not apply any flux which could cause flux wicking. ■This product may have slight color differences due to production lot variability, but this does not affect the performance. ■Please refer to the following page for handling precautions when inserting and removing. ■Because the product can disengage if dropped (or other impact), or by FPC routing, it is advised to secure the mated connectors to the board with housings and cushioning materials. ■Do not use the connector in non-recommended conditions (i.e., rated current, rated voltage, PCB design and operating environment, etc.). Such usage could lead to material outgassing, ignition, or short-circuit, etc. Refer to the specifications and guidelines for board pattern dimensions, board cautions, and connector treatment. Please contact Hirose if connector usage in conditions other than those described in the specifications and the guidelines is being considered.

Apr.1.2024 Copyright 2024 HIROSE ELECTRIC CO., LTD. All Rights Reserved.

●Connector Handling Precautions

Disengagement Prevention

Please use cushioning

The connector may come off due to impact such as dropping.
Cushioning should be large enough to cover the entire connector.

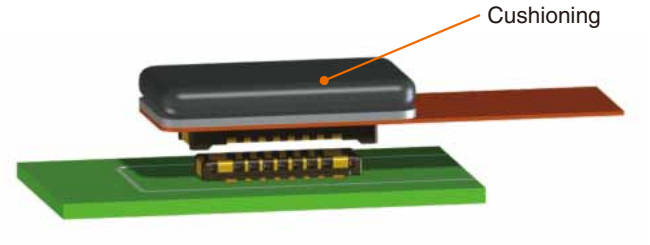

Mating Method

1) Locate the guide port and align.

This product has a guide rib on the receptacle side to ensure proper engagement.
Align the connector based on the guide rib.

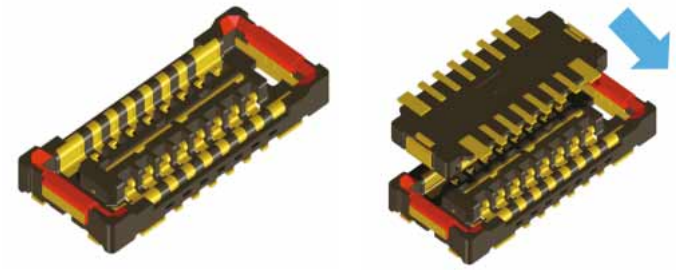

2)Once aligned, the connector engages.

You can feel the mated height of the connector lower.

Move the connector forward and backward,
left and right to find the guide port.

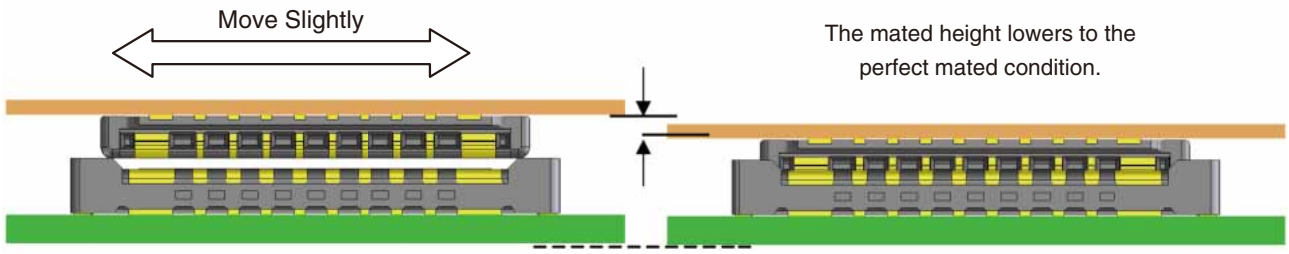

3)In the engaged state, the connectors are parallel to each other, and the connectors cannot move forward, backward, left, or right. Complete mating from this state.

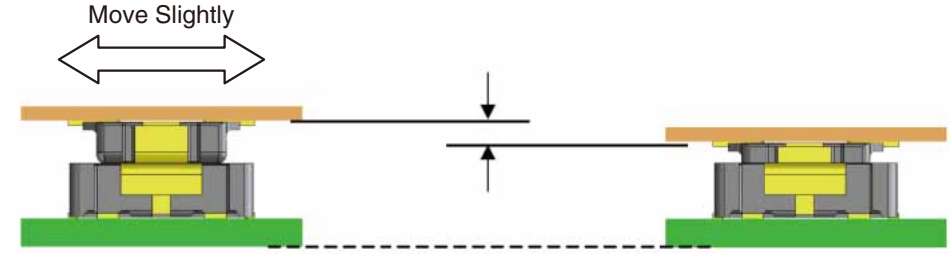

4) Check that mating is completed.

If one side is floating, or if it is mated diagonally, remove and re-mate.

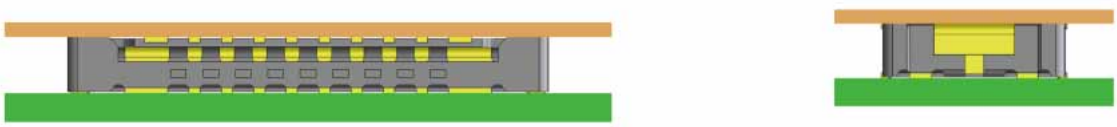

Apr.1.2024 Copyright 2024 HIROSE ELECTRIC CO., LTD. All Rights Reserved.

●Handling Precautions for Connector Removal

1) When removing the connector, it is preferable to pull it out in the upward direction from the connector mounting surface.
However when removing the FPC from the circuit board it becomes more difficult to remove it vertically with higher pin counts and thin FPCs.

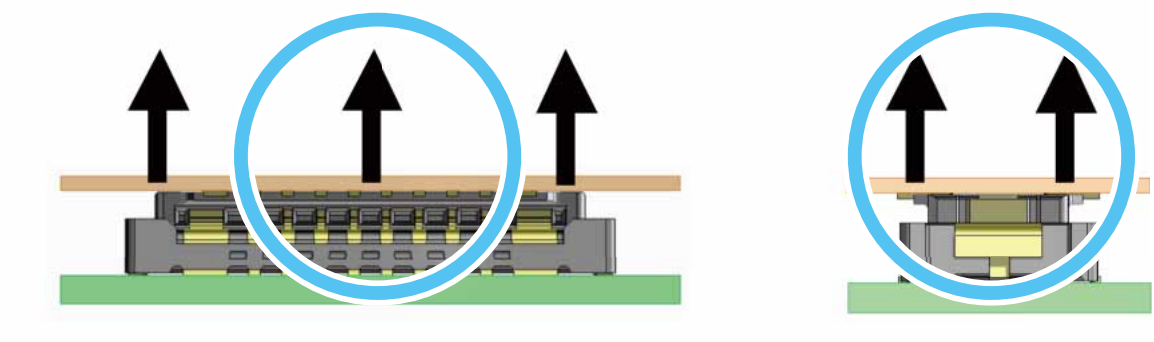

2) If difficult to remove, extract the connector diagonally in the direction of the pitch.
Note that removal from the widthwise side will apply a large load to the contacts. When removing from the width direction, pull the end of the FPC in the upward direction.
(When a force is applied in the horizontal direction, a large load is applied to the contact.)

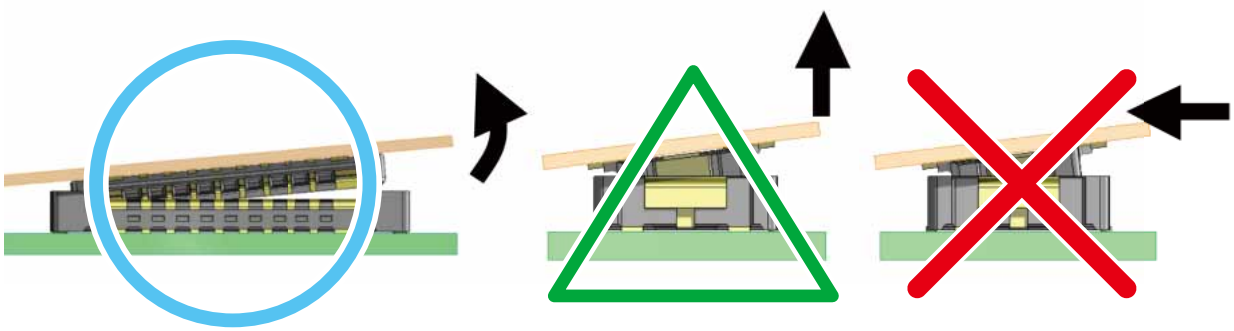

3) If the FPC does not have sufficient rigidity, solder stripping or connector breakage may occur. Please use it after checking the repetitive operation with the flexible board you during a trial manufacture run. Refrain from holding the corner of the flexible board and removing it diagonally as it will result in a large load to the contacts.

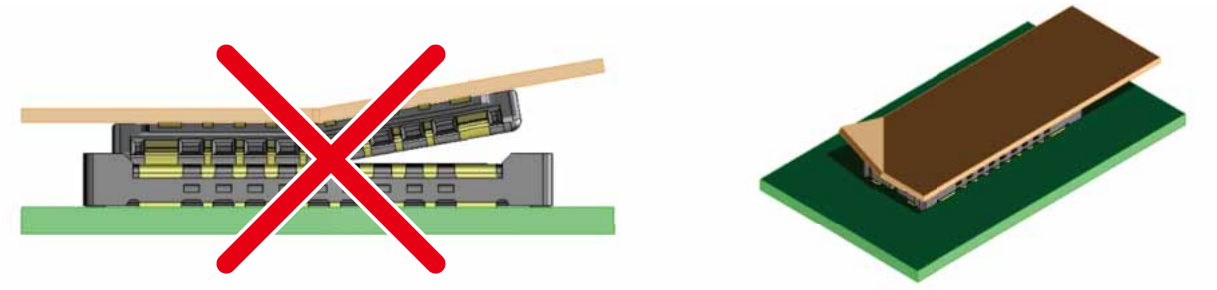

HIROSE ELECTRIC CO.,LTD.
2-6-3,Nakagawa Chuoh,Tsuzuki-Ku,Yokohama-Shi 224-8540,JAPAN
https://www.hirose.com/

Apr.1.2024 Copyright 2024 HIROSE ELECTRIC CO., LTD. All Rights Reserved.

The characteristics and the specifications contained herein are for reference purpose. Please refer to the latest customer drawings prior to use.
The contents of this catalog are current as of date of 02/2023. Contents are subject to change without notice for the purpose of improvements.