THIS DRAWING IS UNPUBLISHED. RELEASED FOR PUBLICATION 2019
© COPYRIGHT 2019 BY- TE CONNECTIVITY ALL RIGHTS RESERVED.

REVISIONS					
P	LTR	DESCRIPTION	DATE	DWN	APVD
	AC1	TOLERANCE ADDED FOR DIMENSION 0.63	17JUN2019	SS	PS

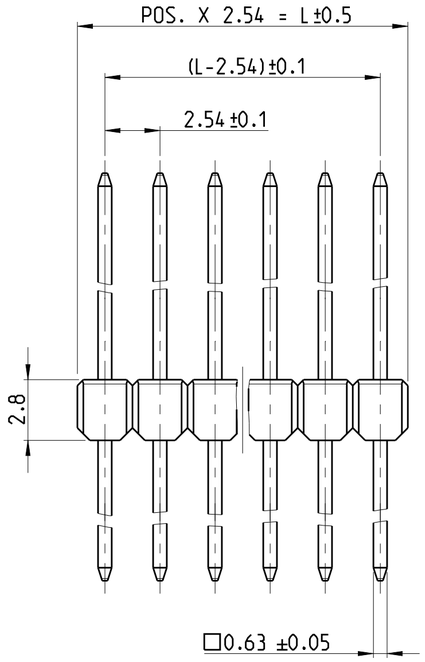

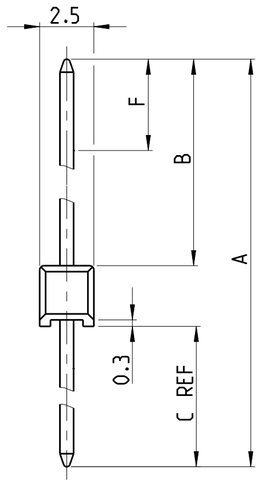

"F" = GOLD AREA

DIMENSION					PART- NO.		PART- NO.		PART- NO.	
					SELECTIVE GOLD PLATED	△7	TIN PLATED	△7	SELECTIVE GOLD PLATED	△7
A	B	C	F	-	△1 △5 △7	WEIGHT POS. PER ROW	△2 △5 △7	WEIGHT POS. PER ROW	△3 △4 △7	WEIGHT POS. PER ROW
12.7	6.7	3.2	4.4	-	826629	0.0654 g	826926	0.0656 g		
12.0	6.7	2.5	4.4	-	826630	0.0629 g	△8 826935	0.0632 g		
11.8	5.8	3.2	4.4	-	826646	0.0622 g	826936	0.0625 g	△8 829070	0.0621 g
11.1	5.8	2.5	4.4	-	826647	0.0597 g	826937	0.0600 g		
14.0	8.0	3.2	4.4	-	826648	0.0699 g	826938	0.0703 g		
13.3	8.0	2.5	4.4	-	826649	0.0674 g	△8 826939	0.0678 g		
12.7	6.7	3.2	5.5	-	-	-	-	-	△8 828356	0.0653 g

CONTACT PIN	CuZn	SEE TABLE
PIN HOUSING	PBT GV	SEE TABLE
DESCRIPTION	MATERIAL	FABRE/COLOR/PLATING/SURFACE

NOTES:

△1 MATING SIDE : AREA "F" MIN 0.7µm PdNi + MIN 0.1µm GOLD OVER 1.27µm NICKEL BY AREA "B"
SOLDER SIDE: MIN 3µm TIN OVER 1.27µm NICKEL

△2 MATING AND SOLDER SIDE : MIN 3µm TIN OVER 1.27µm NICKEL

△3 MATING SIDE: AREA "F" 0.13µm GOLD OVER 1.27µm NICKEL BY AREA "B"
SOLDER SIDE: MIN 3µm TIN OVER 1.27µm NICKEL

△4 COLOR OF HOUSING: GREY

△5 COLOR OF HOUSING: GREEN

△6 TOLERANCES NOT CUMULATIVE

△7 THE NUMBER OF POSITION PER ROW HAS TO BE ADDED TO THE BASE NO. AS A DASH NO.
EG: 2-826629-0 = 20 POSITIONS

THE NUMBER OF POSITIONS PER ROW IS ALSO THE FACTOR FOR THE WEIGHT DETERMINATION
E.G: 20 X 0.0654 g = 1.308 g

△8 OBSOLETE

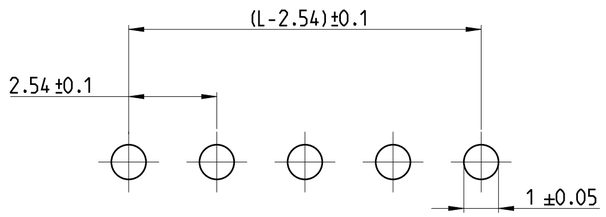

SCALE 8:1
LAYOUT FOR HOLES ON PCB

THIS DRAWING IS A CONTROLLED DOCUMENT.

DIMENSIONS: mm

TOLERANCES UNLESS OTHERWISE SPECIFIED: ±0.2mm △6
0 PLC ±
1 PLC ±
2 PLC ±
3 PLC ±
4 PLC ±
ANGLES ±

MATERIAL SEE TABLE -

FINISH - -

DWN G.HOLAUS 10NOV1989
CHK SCHAARSCHMIDT M. -
APVD - -
PRODUCT SPEC 108-18012
APPLICATION SPEC 114-25011
WEIGHT -

CUSTOMER DRAWING

TE Connectivity

NAME AMPMODU II PIN HEADER, SINGLE ROW, DUAL ROW, VERTICAL AND RIGHT ANGLE MOUNT

SIZE	CAGE CODE	DRAWING NO	RESTRICTED TO
A2	00779	C-826629	-

SCALE 5:1 SHEET 1 OF 4 REV AC1

THIS DRAWING IS UNPUBLISHED. RELEASED FOR PUBLICATION 2019
© COPYRIGHT 2019 BY- TE CONNECTIVITY ALL RIGHTS RESERVED.

REVISIONS					
P	LTR	DESCRIPTION	DATE	DWN	APVD
		SEE SHEET 1			

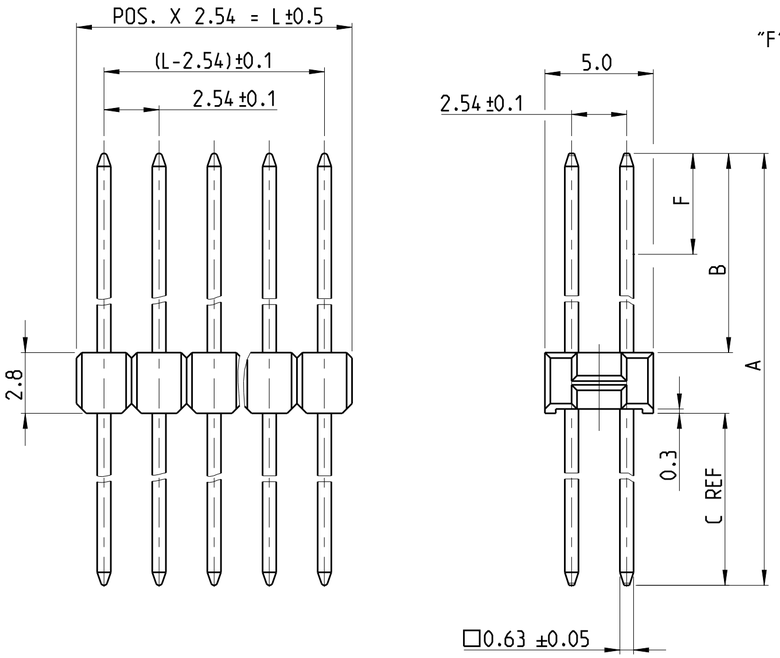

"F" = GOLD AREA

DIMENSION					PART-NO.		PART- NO.		PART- NO.	
					SELECTIVE GOLD PLATED	△7	TIN PLATED	△7	SELECTIVE GOLD PLATED	△7
A	B	C	F	-	△1 △5 △7	WEIGHT POS. PER ROW	△2 △5 △7	WEIGHT POS. PER ROW	△3 △4 △7	WEIGHT POS. PER ROW
12.7	6.7	3.2	5.5	-	826632	0.1276 g	826925	0.1279 g	828420	0.1272 g
12.0	6.7	2.5	4.4	-	826633	0.1226 g	826941	0.1229 g		
11.8	5.8	3.2	4.4	-	826656	0.1212 g	826942	0.1217 g	△8 828533	0.1209 g
11.1	5.8	2.5	4.4	-	826657	0.1162 g	826943	0.1165 g		
14.0	8.0	3.2	4.4	-	826658	0.1366 g	826944	0.1370 g		
13.3	8.0	2.5	4.4	-	826659	0.1316 g	△8 826945	0.1323 g		

CONTACT PIN	CuZn	SEE TABLE
PIN HOUSING	PBT GV	SEE TABLE
DESCRIPTION	MATERIAL	FABRE/COLOR/PLATING/SURFACE

NOTES:

△1 MATING SIDE : AREA "F" MIN 0.7µm PdNi + MIN 0.1µm GOLD OVER 1.27µm NICKEL BY AREA "B"
SOLDER SIDE: MIN 3µm TIN OVER 1.27µm NICKEL

△2 MATING AND SOLDER SIDE : MIN 3µm TIN OVER 1.27µm NICKEL

△3 MATING SIDE: AREA "F" 0.13µm GOLD OVER 1.27µm NICKEL BY AREA "B"
SOLDER SIDE: MIN 3µm TIN OVER 1.27µm NICKEL

△4 COLOR OF HOUSING: GREY

△5 COLOR OF HOUSING: GREEN

△6 TOLERANCES NOT CUMULATIVE

△7 THE NUMBER OF POSITION PER ROW HAS TO BE ADDED TO THE BASE NO. AS A DASH NO.
EG: 2-826632-0 = 20 POSITIONS

THE NUMBER OF POSITIONS PER ROW IS ALSO THE FACTOR FOR THE WEIGHT DETERMINATION
E.G: 20 X 0.1276 g = 2.552 g

△8 OBSOLETE

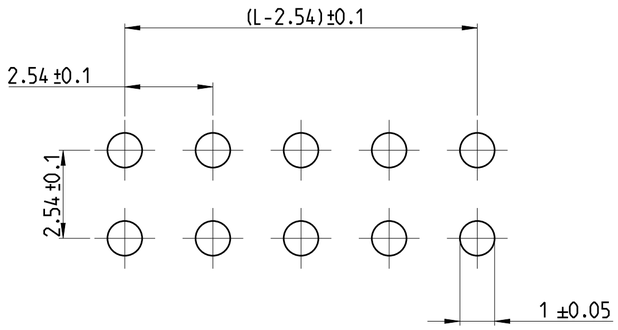

SCALE 8:1

LAYOUT FOR HOLES ON PCB

THIS DRAWING IS A CONTROLLED DOCUMENT.

DIMENSIONS: mm

TOLERANCES UNLESS OTHERWISE SPECIFIED: ±0.2mm △6
0 PLC ±
1 PLC ±
2 PLC ±
3 PLC ±
4 PLC ±
ANGLES ±

MATERIAL SEE TABLE -

FINISH - -

DWN G.HOLAUS 10NOV1989
CHK SCHAARSCHMIDT M. -
APVD - -
PRODUCT SPEC 108-18012
APPLICATION SPEC 114-25011
WEIGHT -

TE Connectivity

NAME AMPMODU II PIN HEADER, SINGLE ROW, DUAL ROW, VERTICAL AND RIGHT ANGLE MOUNT

SIZE	CAGE CODE	DRAWING NO	RESTRICTED TO
A2	00779	C-826629	-

CUSTOMER DRAWING | SCALE 5:1 | SHEET 2 OF 4 | REV AC1

THIS DRAWING IS UNPUBLISHED. RELEASED FOR PUBLICATION 2019
© COPYRIGHT 2019 BY- TE CONNECTIVITY ALL RIGHTS RESERVED.

REVISIONS

P	LTR	DESCRIPTION	DATE	DWN	APVD
		SEE SHEET 1			

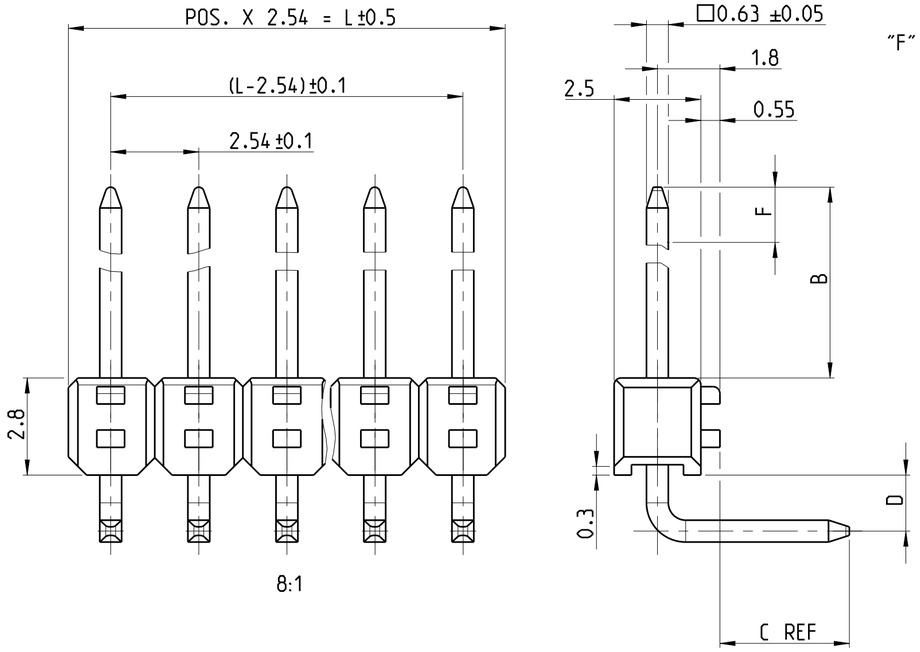

"F" = GOLD AREA

DIMENSION					PART-NO.		PART- NO.		PART- NO.	
					SELECTIVE GOLD PLATED	△7	TIN PLATED	△7	SELECTIVE GOLD PLATED	△7
B	C	D	F	-	△1 △5 △7	WEIGHT POS. PER ROW	△5 △7	WEIGHT POS. PER ROW	△3 △4 △7	WEIGHT POS. PER ROW
6.7	3.2	1.3	4.4	-	826631	0.0757 g	826947 △2	0.0760 g		
6.7	2.5	1.3	4.4	-	826651	0.0731 g	826948 △2	0.0735 g		
5.8	3.2	1.3	4.4	-	826652	0.0726 g	826949 △2	0.0728 g	△8 829071	0.0726 g
5.8	2.5	1.3	4.4	-	826653	0.0701 g	826950 △2	0.0704 g		
8.0	3.2	1.3	4.4	-	826654	0.0803 g	826951 △2	0.0807 g		
8.0	2.5	1.3	4.4	-	826655	0.0777 g	△9 826952 △10	0.0782 g		
6.7	3.2	1.3	5.5	-	-	-	-	-	△8 828419	0.0758 g

CONTACT PIN	CuZn	SEE TABLE
CONTACT PIN	CuSn6 △9	SEE TABLE
PIN HOUSING	PBT GV	SEE TABLE
DESCRIPTION	MATERIAL	FABRE/COLOR/PLATING/SURFACE

NOTES:

△1 MATING SIDE : AREA "F" MIN 0.7µm PdNi + MIN 0.1µm GOLD OVER 1.27µm NICKEL BY AREA "B"
SOLDER SIDE: MIN 3µm TIN OVER 1.27µm NICKEL

△2 MATING AND SOLDER SIDE : MIN 3µm TIN OVER 1.27µm NICKEL

△3 MATING SIDE: AREA "F" 0.13µm GOLD OVER 1.27µm NICKEL BY AREA "B"
SOLDER SIDE: MIN 3µm TIN OVER 1.27µm NICKEL

△4 COLOR OF HOUSING: GREY

△5 COLOR OF HOUSING: GREEN

△6 TOLERANCES NOT CUMULATIVE

△7 THE NUMBER OF POSITION PER ROW HAS TO BE ADDED TO THE BASE NO. AS A DASH NO.
EG: 2-826631-0 = 20 POSITIONS

THE NUMBER OF POSITIONS PER ROW IS ALSO THE FACTOR FOR THE WEIGHT DETERMINATION
E.G: 20 X 0.0757 g = 1.514 g

△8 OBSOLETE

△10 MATING AND SOLDER SIDE : 2µm TIN OVER 1.27µm NICKEL

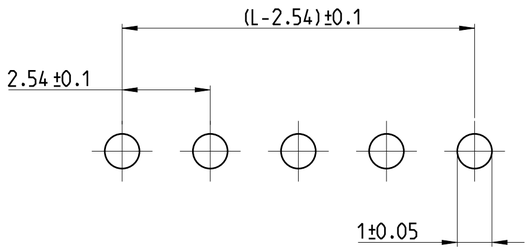

SCALE 8:1
LAYOUT FOR HOLES ON PCB

THIS DRAWING IS A CONTROLLED DOCUMENT.

DIMENSIONS: mm

TOLERANCES UNLESS OTHERWISE SPECIFIED: ±0.2mm △6
0 PLC ±
1 PLC ±
2 PLC ±
3 PLC ±
4 PLC ±
ANGLES ±

MATERIAL: SEE TABLE -

FINISH: - -

DWN G.HOLAUS 10NOV1989
CHK SCHAARSCHMIDT M. -
APVD - -
PRODUCT SPEC 108-18012
APPLICATION SPEC 114-25011
WEIGHT -
CUSTOMER DRAWING

TE Connectivity

NAME AMPMODU II PIN HEADER, SINGLE ROW, DUAL ROW, VERTICAL AND RIGHT ANGLE MOUNT

SIZE	CAGE CODE	DRAWING NO	RESTRICTED TO
A2	00779	C-826629	-

CUSTOMER DRAWING | SCALE 5:1 | SHEET 3 OF 4 | REV AC1

THIS DRAWING IS UNPUBLISHED. RELEASED FOR PUBLICATION 2019
© COPYRIGHT 2019 BY- TE CONNECTIVITY ALL RIGHTS RESERVED.

REVISIONS					
P	LTR	DESCRIPTION	DATE	DWN	APVD
		SEE SHEET 1			

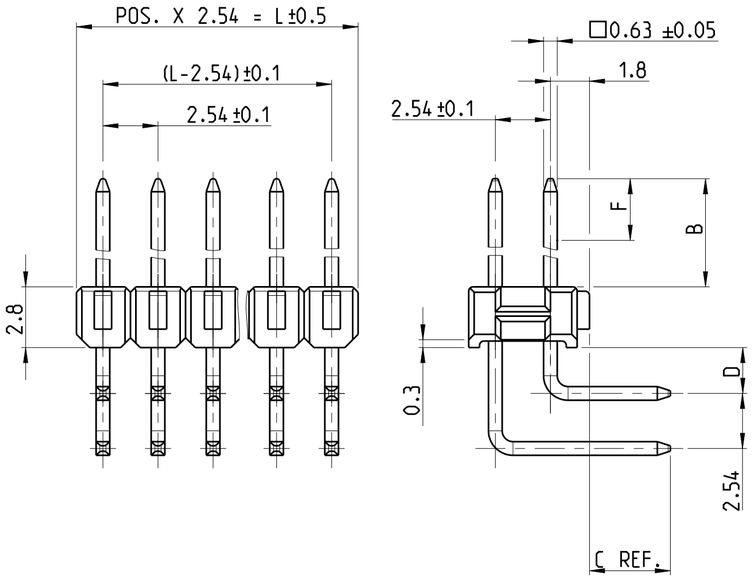

"F" = GOLD AREA

DIMENSION					PART-NO.		PART- NO.		PART- NO.	
					SELECTIVE GOLD PLATED	△7	TIN PLATED	△7	SELECTIVE GOLD PLATED	△7
B	C	D	F	-	△1 △5 △7	WEIGHT POS. PER ROW	△2 △5 △7	WEIGHT POS. PER ROW	△3 △4 △7	WEIGHT POS. PER ROW
6.7	3.2	1.3	4.4	-	826634	0.1646 g	826953	0.1656 g	△8 828418	0.1651 g
6.7	2.5	1.3	4.4	-	△8 826661	0.1597 g	△8 826954	0.1606 g		
5.8	3.2	1.3	4.4	-	826662	0.1587 g	826955	0.1603 g	△8 829072	0.1587 g
5.8	2.5	1.3	4.4	-	826663	0.1538 g	△8 826956	0.1542 g		
8.0	3.2	1.3	4.4	-	826664	0.1741 g	826957	0.1749 g		
8.0	2.5	1.3	4.4	-	826665	0.1687 g	△8 826958	0.1699 g		

CONTACT PIN	CuZn	SEE TABLE
PIN HOUSING	PBT GV	SEE TABLE
DESCRIPTION	MATERIAL	FABRE/COLOR/PLATING/SURFACE

NOTES:

△1 MATING SIDE : AREA "F" MIN 0.7µm PdNi + MIN 0.1µm GOLD OVER 1.27µm NICKEL BY AREA "B"
SOLDER SIDE: MIN 3µm TIN OVER 1.27µm NICKEL

△2 MATING AND SOLDER SIDE : MIN 3µm TIN OVER 1.27µm NICKEL

△3 MATING SIDE: AREA "F" 0.13µm GOLD OVER 1.27µm NICKEL BY AREA "B"
SOLDER SIDE: MIN 3µm TIN OVER 1.27µm NICKEL

△4 COLOR OF HOUSING: GREY

△5 COLOR OF HOUSING: GREEN

△6 TOLERANCES NOT CUMULATIVE

△7 THE NUMBER OF POSITION PER ROW HAS TO BE ADDED TO THE BASE NO. AS A DASH NO.
EG: 2-826634-0 = 20 POSITIONS

THE NUMBER OF POSITIONS PER ROW IS ALSO THE FACTOR FOR THE WEIGHT DETERMINATION
E.G: 20 X 0.1646 g = 3.292 g

△8 OBSOLETE

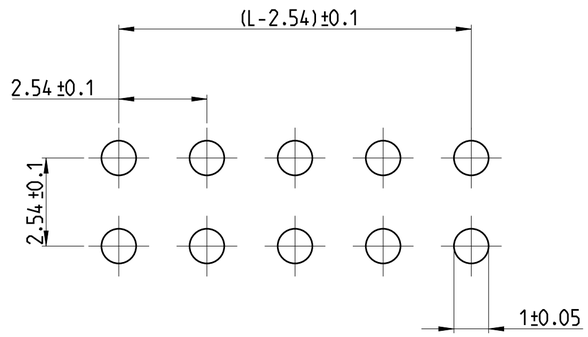

SCALE 8:1
LAYOUT FOR HOLES ON PCB

THIS DRAWING IS A CONTROLLED DOCUMENT.

DIMENSIONS: mm

TOLERANCES UNLESS OTHERWISE SPECIFIED: ±0.2mm △6
0 PLC ±
1 PLC ±
2 PLC ±
3 PLC ±
4 PLC ±
ANGLES ±

MATERIAL: SEE TABLE -
FINISH: - -

DWN G.HOLAUS 10NOV1989
CHK SCHAARSCHMIDT M. -
APVD -
PRODUCT SPEC 108-18012
APPLICATION SPEC 114-25011
WEIGHT -

CUSTOMER DRAWING

TE Connectivity

NAME AMPMODU II PIN HEADER, SINGLE ROW, DUAL ROW, VERTICAL AND RIGHT ANGLE MOUNT

SIZE	CAGE CODE	DRAWING NO	RESTRICTED TO
A2	00779	C-826629	-

SCALE 5:1 SHEET 4 OF 4 REV AC1