STRAIGHT JACK FLOATING FLANGE MOUNT

SOLDER CABLE .085

R128.292.700

Series : **BMA**

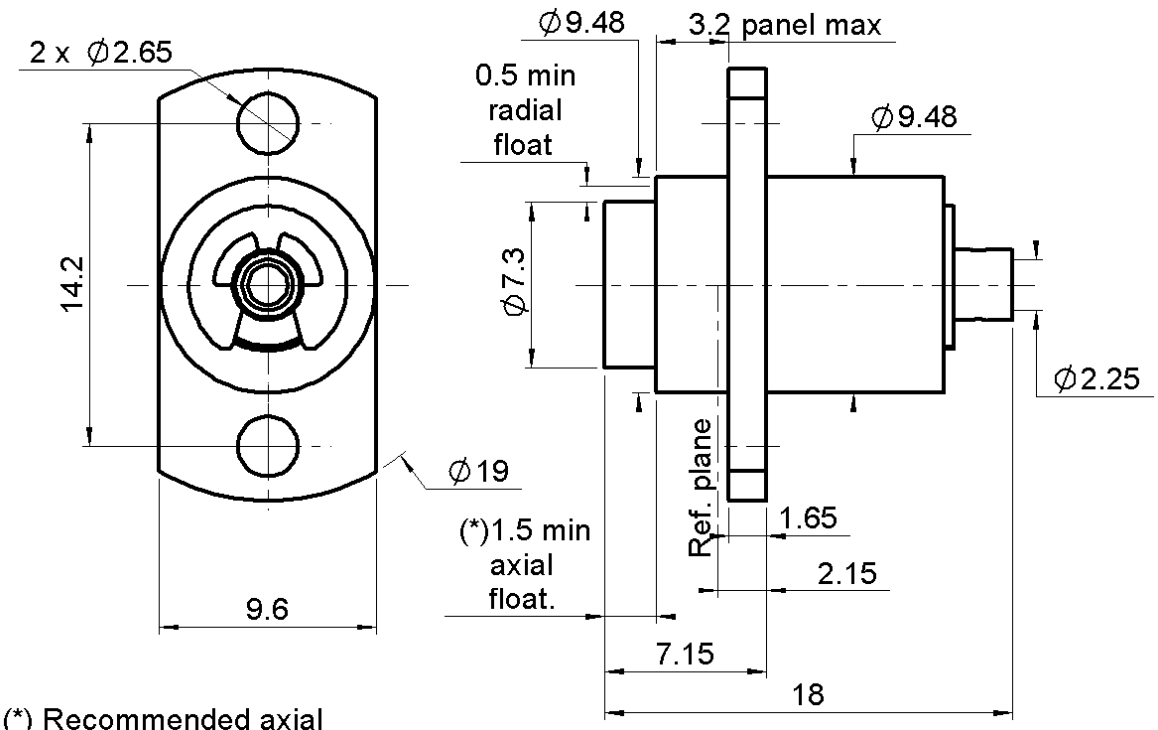

(*) Recommended axial float mount for best electrical performance: 0.51 +/- 0.25 mm (.020" +/-.010)

PANEL DRILLING

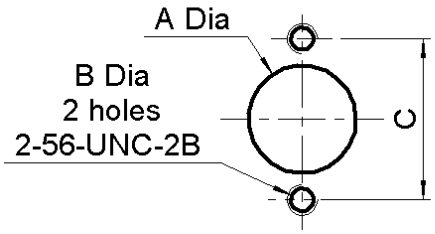

	maxi	mini
A	9.6	9.55
C	14.3	14.1

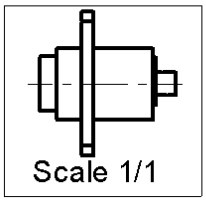

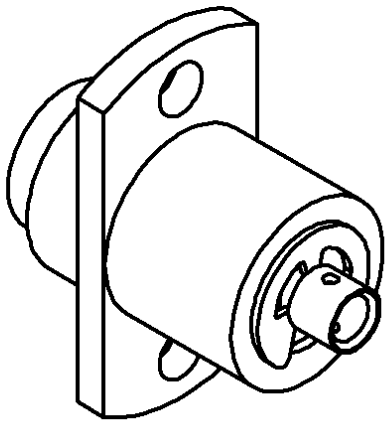

All dimensions are in mm.

COMPONENTS	MATERIALS	PLATING (µm)
BODY	**STAINLESS STEEL**	**GOLD 0.5 OVER NICKEL 2**
CENTER CONTACT	**BERYLLIUM COPPER**	**GOLD 1.3 OVER NICKEL2**
OUTER CONTACT	**BERYLLIUM COPPER**	**NPGR**
INSULATOR	**PTFE**	
GASKET	-	
OTHERS PARTS	**BRASS**	**NICKEL 2**
-	-	-
-	-	-

Issue : 1110 C

In the effort to improve our products, we reserve the right to make changes judged to be necessary.

RADIALL®

STRAIGHT JACK FLOATING FLANGE MOUNT

SOLDER CABLE .085

R128.292.700

Series : **BMA**

PACKAGING

Standard	Unit	Other
100	**'W' option**	**Contact us**

ELECTRICAL CHARACTERISTICS

Impedance		**50**	Ω
Frequency		**0-22**	GHz
VSWR	**1.05 +**	**0,0100**	x F(GHz) Maxi
Insertion loss		**0.03**	√F(GHz) dB Maxi
RF leakage	**- (**	**90**	- F(GHz)) dB Maxi
Voltage rating		**350**	Veff Maxi
Dielectric withstanding voltage		**1000**	Veff mini
Insulation resistance		**5000**	MΩ mini

MECHANICAL CHARACTERISTICS

Center contact retention		
Axial force – Mating end	**27**	N mini
Axial force – Opposite end	**27**	N mini
Torque	**NA**	N.cm mini
Recommended torque		
Mating	**NA**	N.cm
Panel nut	**NA**	N.cm
Clamp nut	**NA**	N.cm
A/F clamp nut	**0,0000**	mm
Mating life	**1000**	Cycles mini
Weight	**4,5770**	g

ENVIRONMENTAL

Operating temperature	**-65/+165**	° C
Hermetic seal	**NA**	Atm.cm3/s
Panel leakage	***IP54**	

SPECIFICATION

CABLE ASSEMBLY

Stripping	a	b	c	d	e	f
mm	1,78	0,00	0,00	0,00	0,00	0,00

Assembly instruction :

Recommended cable(s)
BELN 1671A
RG 405
KS 1

Characteristics indicated on this data sheet are those that can be achieved with the highest performance cable. Intrinsic limitations of the cable may diminish the performance of the assembly

Cable retention

- pull off	**136**	N mini
- torque	**NA**	N.cm

TOOLING

Part Number	Description	Hexagon
.	.	.
R282.051.000	STRIPPING TOOL	
R282.062.000	POINTER GAUGE	
R282.740.000	SOLDERING MOUNTING	
R282.860.130	SOLDER POSITIONER BMA	

OTHER CHARACTERISTICS

*Mated with waterproof male connector

It is recommended to use a service loop to facilitate the float features of the connector

In the effort to improve our products, we reserve the right to make changes judged to be necessary.

RADIALL®

STRAIGHT JACK FLOATING FLANGE MOUNT

SOLDER CABLE .085

R128.292.700

Series : **BMA**

COMPONENT

BODY

STRIPPING DIMENSION

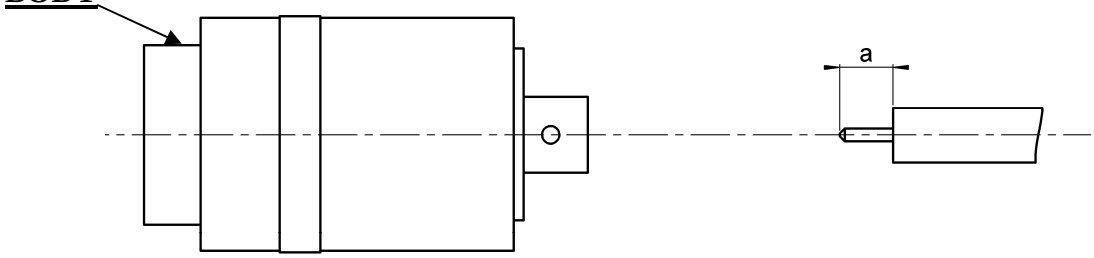

We recommend a cable thermal preconditioning before assembly

1

-Strip the cable with the cable stripping tool.
-Trim the cable inner conductor with the trimmer.
-Clean the cable

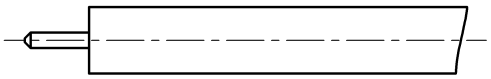

2

-Introduce the cable into the body until contact with the body shoulder..
-Place the sub-assembly on assembly jig with the positioner and tighten it.
-Solder body on the cable.
-Let assembly cool down before removing it from the jig.

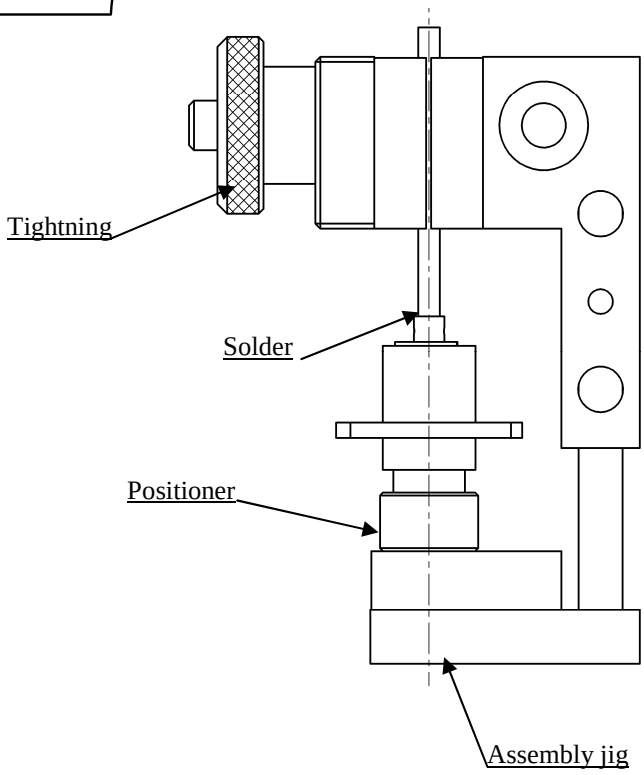

In the effort to improve our products, we reserve the right to make changes judged to be necessary.

RADIALL®