BORN SEMICONDUCTOR

PESD5V0U1UT-N

ESD Protection Diode

Features

- 70W Peak pulse power per line (tp = 8/20μs)
- Unidirectional configurations
- Solid-state silicon-avalanche technology
- Low clamping voltage
- Low leakage current
- IEC 61000-4-2 ±15kV contact ; ±20kV air
- IEC 61000-4-4 (EFT) 40A (5/50ns)
- IEC 61000-4-5 (Lightning) 4.0A(8/20μs)

Package

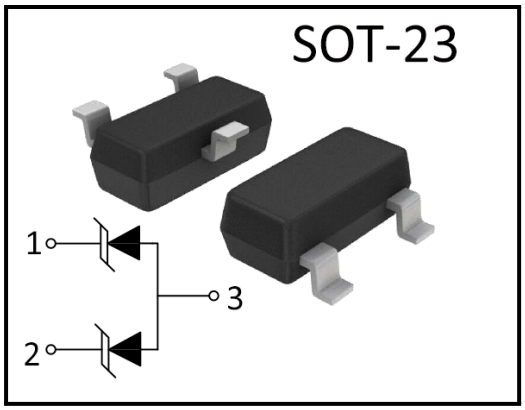

Applications

- Dataline
- Automatic Teller Machines
- Net works
- Power line

Mechanical Characteristics

- SOT-23 package
- Molding compound flammability rating: UL 94V-0
- Packaging: Tape and Reel
- RoHS/WEEE Compliant

Marking

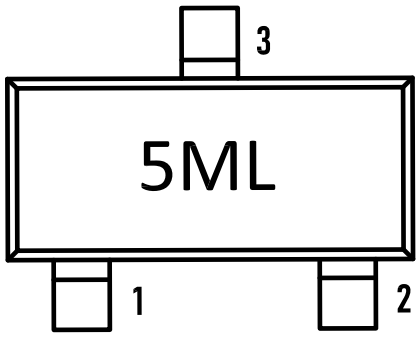

Ordering information

Order code	Package	Base qty	Delivery mode
PESD5V0U1UT-N	SOT-23	3K	Tape and reel

BORN SEMICONDUCTOR , INC. ALL RIGHT RESERVED

Specifications are subject to change without notice.
Please refer to http://*www.born-tw.com* for current information.

Revision: 2022-Jan-1-A

PESD5V0U1UT-N

ESD Protection Diode

Electrical Parameters (T_A = 25°C unless otherwise noted)

Symbol	Parameter
V_{RWM}	Peak Reverse Working Voltage
I_R	Reverse Leakage Current @ V_{RWM}
V_{BR}	Breakdown Voltage @ I_T
I_T	Test Current
I_{PP}	Maximum Reverse Peak Pulse Current
V_C	Clamping Voltage @ I_{PP}

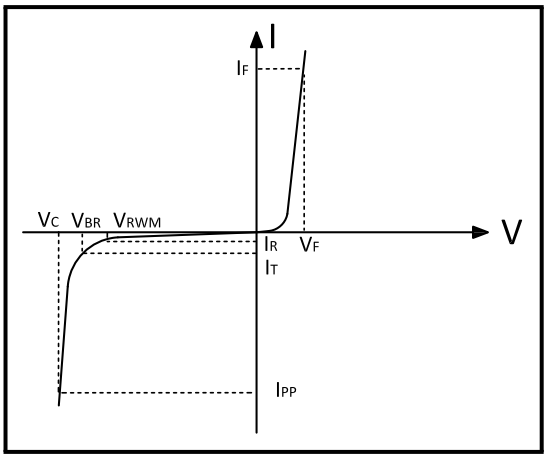

Absolute Maximum Rating

Rating	Symber	Value	Units
Peak Pulse Power (tp =8/20μs)	P_{PP}	70	Watts
Peak Pulse Current (tp =8/20μs)	I_{PP}	4.0	A
ESD per IEC 61000-4-2 (Air) ESD per IEC 61000-4-2 (Contact)	V_{ESD}	20 15	KV
Lead Soldering Temperature	T_L	260(10seconds)	°C
Junction Temperature	T_J	-55 to + 150	°C
Storage Temperature	T_{stg}	-55 to + 150	°C

Electrical Characteristics

Parameter	Symber	Conditions	Min	Typical	Max	Units
Reverse Stand-Off Voltage	V_{RWM}	–	–	–	5.0	V
Reverse Breakdown Voltage	V_{BR}	I_T=1mA	6.0	7.0	9.5	V
Reverse Leakage Current	I_R	V_{RWM}=5V,T=25°C	–	–	0.2	uA
Peak Pulse Current	I_{PP}	tp =8/20us	–	–	4.0	A
Clamping Voltage	V_C	I_{PP}=4.0A, tp =8/20us	–	14	17	V
Junction Capacitance	C_j	V_R=0V,T=25°C,f=1MHZ	–	0.5	0.8	pF

BORN SEMICONDUCTOR , INC. ALL RIGHT RESERVED

Specifications are subject to change without notice.
Please refer to http://*www.born-tw.com* for current information.

PESD5V0U1UT-N

ESD Protection Diode

Typical Characteristics

Figure 1: Peak Pulse Power vs. Pulse Time

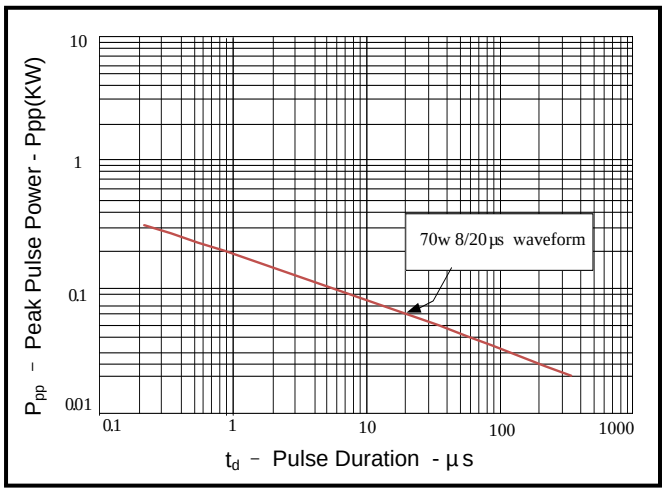

Figure 2: Power Derating Curve

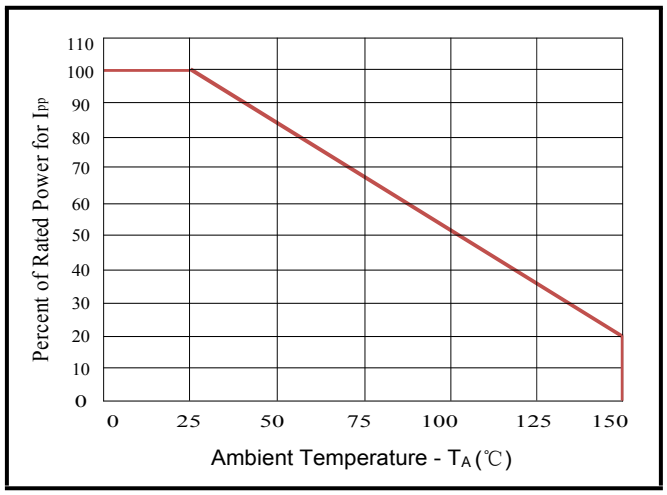

Figure 3: Pulse Waveform

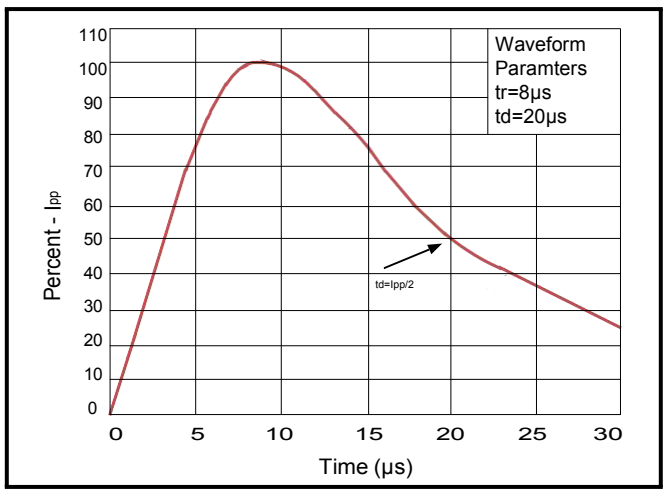

Figure 4: Clamping Voltage vs. I_{PP}

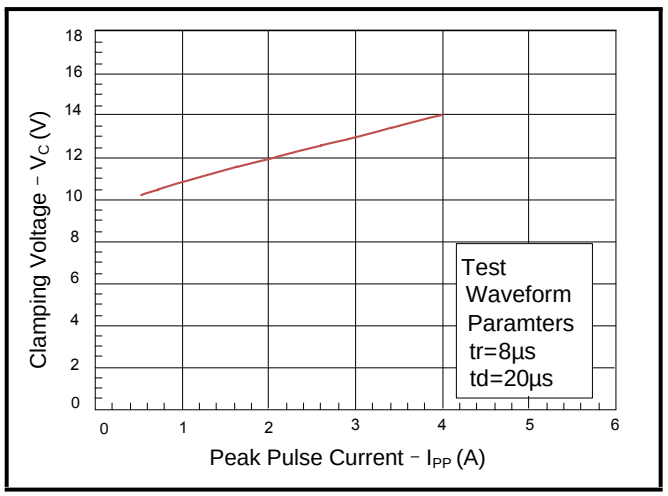

BORN SEMICONDUCTOR , INC. ALL RIGHT RESERVED

Specifications are subject to change without notice.
Please refer to http://www.born-tw.com for current information.

PESD5V0U1UT-N

ESD Protection Diode

Outline Drawing – SOT-23

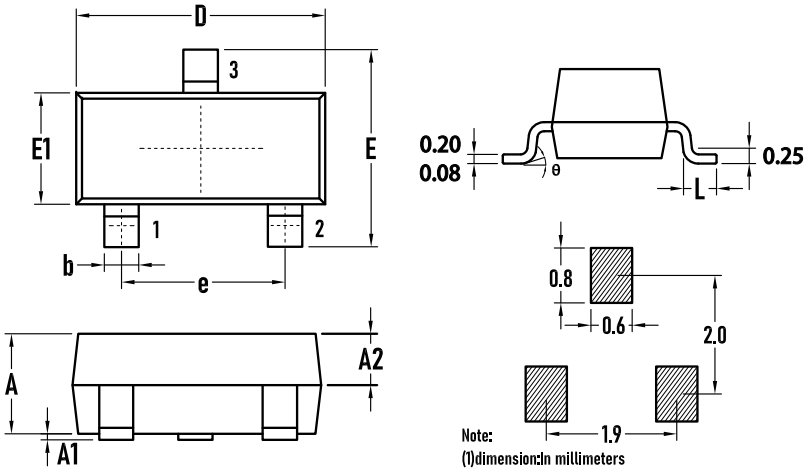

SYMBOL	MILLIMETER		
	MIN.	Typ.	MAX.
A	0.90	1.00	1.10
A1	0.01	–	0.10
A2	0.50	0.60	0.70
D	2.80	2.90	3.00
b	0.25	0.35	0.45
E	2.10	2.30	2.50
E1	1.20	1.30	1.40
e	1.80	1.90	2.00
L	0.25	0.35	0.45
θ	0	–	8°

Packaging Tape - SOT-23

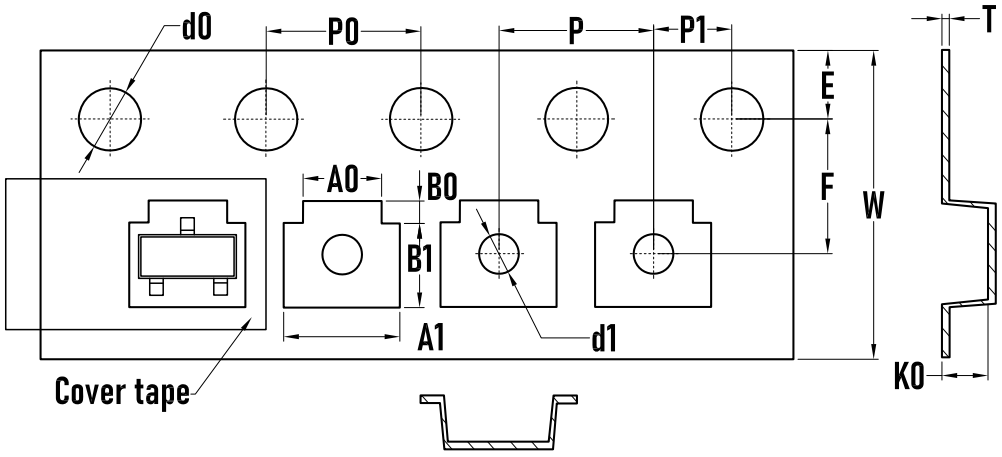

SYMBOL	MILLIMETER
A0	2.10±0.10
A1	3.10±0.10
B0	0.65±0.10
B1	2.75±0.10
d0	1.55±0.10
d1	1.00±0.05
E	1.75±0.10
F	3.50±0.10
K0	1.10±0.10
P	4.00±0.10
P0	4.00±0.10
P1	2.00±0.10
W	8.00±0.30
T	0.20 ±0.05

Packaging Reel

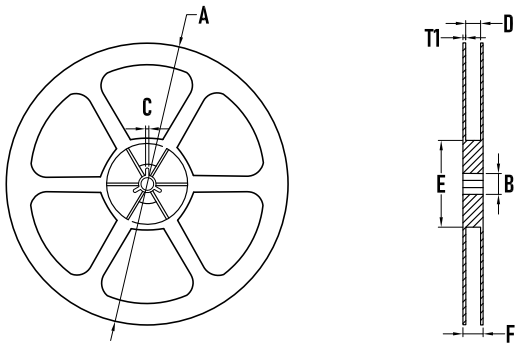

SYMBOL	MILLIMETER
A	177.8±0.2
B	3.1
C	13.50
D	9.6±0.3
E	75±0.2
F	12.3±0.3
T1	1.0±0.2
Quantity	3000PCS

BORN SEMICONDUCTOR , INC. ALL RIGHT RESERVED

Specifications are subject to change without notice.
Please refer to http://*www.born-tw.com* for current information.

Revision: 2022-Jan-1-A