Specification
No. G210510B0323Z1 — 1 to 8

Masspower

Electrolytic Capacitors
Specifications

Customer Part No. :

Customer Specification No. :

Nippon Chemi-Con Part No. : EKZH160EC3681MH151

Nippon Chemi-Con Corporation
Chemi-Con East Japan Corporation
Miyagi Plant Design Group Manager

A. Motoki

Shinnosuke Motoki

Receipt Stamp

Change history of specifications

Specifications No.	Revision date	Pages/section revised	Changes made	Reasons for changes
G210510B0323Z1	Aug.09.2022	—	First issue	—

1 Scope

This specification defines the requirements for aluminum electrolytic capacitors KZH series.

2 Part Numbering System

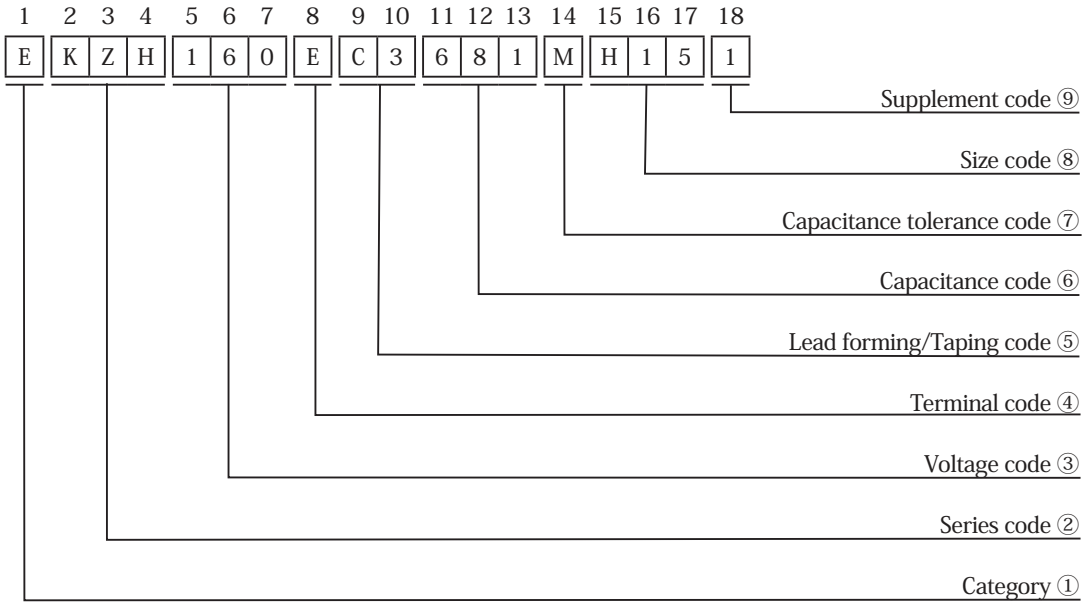

① Category

Category	Code
	1st
Polar	E

② Series code

Series name	Series code		
	2nd	3rd	4th
KZH	K	Z	H

③ Voltage code

Voltage[V]	Voltage code		
	5th	6th	7th
16	1	6	0

④ Terminal code

Terminal configuration	Terminal code
	8th
Radial lead	E

⑤ Lead forming/Taping code

Type	Shape/contents	Lead forming/Taping code	
		9th	10th
Lead forming (Radial lead/Bulk)	CC (3.5mm)	C	3

⑥ Capacitance code

Capacitance[μ F]	Capacitance code		
	11th	12th	13th
680	6	8	1

⑦ Capacitance tolerance code

Capacitance tolerance [%]	Capacitance tolerance code
	14th
± 20	M

⑧ Size code

φ D	Size code
	15th
8	H

L	Size code	
	16th	17th
15	1	5

⑨ Supplement code

Halogen-Free	Supplement code
	18th
	1

3 Appearance and dimensions

Cut

Lead forming code : C3

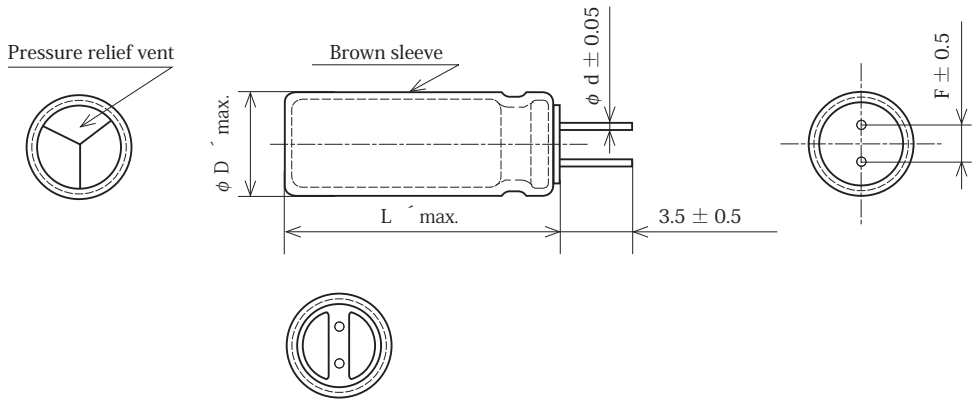

Dimension [mm]

φ D	8
L	15
φ d	0.6
F	3.5
L ´	L + 1.5 ※1
φ D ´	φ D + 0.5 ※1

※1 φ D , L ：Nominal case size

4 Construction

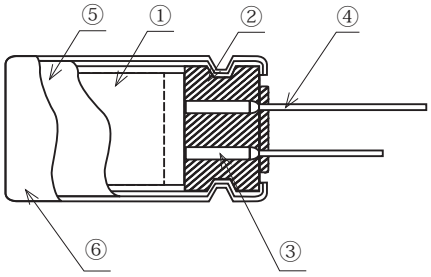

No.	Compositions		Materials
①	Element	Anode foil	Aluminum
		Cathode foil	Aluminum
		Separator	Paper
		Fixing tape	Polypropylene(PP)
②	Seal		Rubber
③	Aluminum tab		Aluminum
④	Lead wire		Bismuth-containing tinned copper clad steel
⑤	Case		Aluminum
⑥	Sleeve		Polyester

※ No ozone depleting substance has been used.
Compliant to the RoHS Directive (2011/65/EU) and the revisions (2015/863/EU)
Halogen-Free

5 Substance Requirements

All homogeneous materials within a component or product must meet the criteria in Table-1, and Table-2. A homogeneous material has uniform composition throughout and cannot be mechanically disjointed into different materials.

Table-1 Substance restrictions for halogen-free products.

Substance	Permissible Limit (by weight)
Bromine (Br)	≦ 900ppm (0.09%)
Chlorine (Cl)	≦ 900ppm (0.09%)
Total concentration of chlorine (Cl) + bromine (Br)	≦ 1500ppm (0.15%)

Table-2 Additional substance restrictions.

Substance	Permissible Limit (by weight)
Antimony Trioxide (Sb_2O_3)	≦ 1000 ppm (0.1%)
Red Phosphorus	≦ 1000 ppm (0.1%)

6 Rating and characteristics

No.	Item	Specification
1	Category temperature range	− 40 to + 105℃
2	Rated voltage range	16 V_{DC}
3	Surge voltage	Table-1
4	Rated capacitance range	See the standard rating table
5	Capacitance tolerance	− 20 to + 20%
6	Dissipation factor(tan δ)	See the standard rating table
7	Leakage current	See the standard rating table
8	Rated ripple current	See the standard rating table
9	Impedance	See the standard rating table

Table-1 Surge voltage

Rated voltage [V_{DC}]	16
Surge voltage [V_{DC}]	20

Rated ripple current multipliers
Frequency multipliers

Frequency [Hz] / Capacitance [μ F]	120	1k	10k	100k
680	0.60	0.87	0.95	1.00

When a frequency is different from the specified condition shown in the table of standard ratings, do not exceed the value obtained by multiplying the permissible maximum ripple current by the multiplier above.

7 Marking

The following items shall be marked on each capacitor. (White marking)

① Rated voltage
② Rated capacitance
③ Upper category temperature
④ Negative polarity marking
⑤ Manufacturer's identification mark
⑥ Capacitance tolerance code
⑦ Lot No.
⑧ Series name

Finish method

1. Lot No. is marked on either of the sleeve or the top of the aluminum case.
2. The negative polarity marking (stripe) is marked to distinguish the negative lead.

(Example)

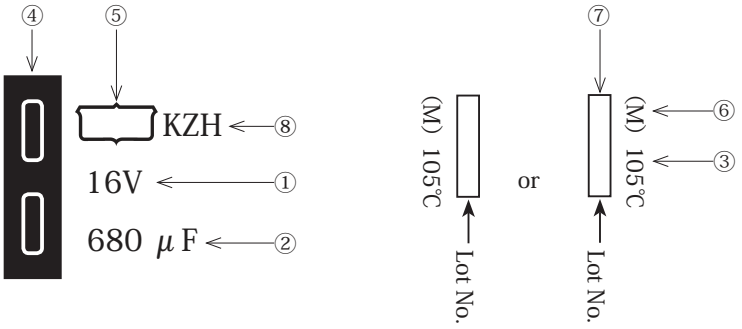

(Front) (Back)

8 Performance

Unless otherwise specified, the capacitors shall be measured at a temperature at + 15 to + 35℃ , a humidity of 45 to 75%RH and a atmospheric pressure of 86 to 106kPa. However, if any doubt arises on the judgment, the measurement conditions shall be + 20 ± 2℃ , 60 to 70%RH and 86 to 106kPa.

8.1 Leakage current (L.C.)

〔Conditions〕 Rated voltage shall be applied to capacitors in series with a resistor of 1000 ± 10 Ω .Then leakage current shall be measured at the end of a specified period after the capacitors reached the rated voltage across the terminals.

〔Criteria〕 Shall not exceed the values specified in the table of Standard Ratings.

8.2 Capacitance (Cap.)

〔Conditions〕 Measuring frequency : 120Hz ± 20%
Measuring voltage : 0.5Vrms max. + 1.5 to 2.0V$_{DC}$
Measuring circuit : Series equivalent circuit ()
〔Criteria〕 Shall be within the specified capacitance tolerance.

8.3 Dissipation factor (tan δ)

〔Conditions〕 Measuring frequency : 120Hz ± 20%
Measuring voltage : 0.5Vrms max. + 1.5 to 2.0V$_{DC}$
Measuring circuit : Series equivalent circuit()
〔Criteria〕 Shall not exceed the values specified in the table of Standard Ratings.

8.4 Impedance

〔Conditions〕 Measuring frequency : 100kHz ± 10%
Measuring voltage : 0.5V rms max.
〔Criteria〕 Shall not exceed the values specified in the table of Standard Ratings.

8.5 Terminal strength

(1) Pull strength

〔Conditions〕 The capacitor body shall be held. A force shall be gradually applied to the lead wire in the direction of the axis of the lead wire up to the specified pull force, and retained for 10 ± 1 seconds.

Nominal lead diameter [mm]	Pull force [N]
Over 0.5 to 0.8 incl.	10

〔Criteria〕 The lead wire shall neither loosen nor break away.

(2) Lead bending strength

〔Conditions〕 The capacitor shall be held so that the normal axis of the lead wire can be in a vertical position. A weight equivalent to the specified load shall be hung on the end of the lead wire. The capacitor body shall be inclined through 90° and returned to its normal position within 2 to 3 seconds. The consecutive bend shall then be in the opposite direction in the same manner.

Nominal lead diameter [mm]	Bending load [N]
Over 0.5 to 0.8 incl.	5

〔Criteria〕 The lead wire shall neither loosen nor break away.

8.6 Soldering heat

〔Conditions〕 Type of solder : Sn-3Ag-0.5Cu
Flux : Ethanol solution(25 wt.% rosin)
Solder temperature/immersion time : + 260 ± 5℃ for l0 ± 1 seconds or + 380 ± 10℃ for 3 ± 0.5 seconds.
Depth of immersion : Up to 1.5 to 2.0mm from the root of the lead wire covered with a thermal shield plate
Speed of immersion : 25 ± 2.5mm/sec.
〔Criteria〕 Appearance : No significant damage, legible marking, and no electrolyte leakage.
Leakage current : Shall not exceed the initial specified value.
Capacitance change : Shall be within ± 10% of the initial measured value.
Tan δ : Shall not exceed the initial specified value.

8.7 Solderability

〔Conditions〕 Type of solder : Sn-3Ag-0.5Cu
Flux : Ethanol solution (25 wt.% rosin)
Solder temperature : + 245 ± 3℃
Depth of immersion : Up to 1.5 to 2.0mm
Immersion time : 2 to 3sec.
〔Criteria〕 Solder shall cover at least 3/4 of the lead surface immersed.

8.8 Vibration

〔Conditions〕 Vibration frequency range : 10 to 55Hz
Amplitude or Acceleration : 0.75 mm (Half amplitude)or 98m/s^2 (Whichever is less severe)
Sweep rate : 10 to 55 to 10Hz in about 1 minute
Direction and period of motion : 2 hours in each of 3 mutually perpendicular directions (total of 6 hours)

Note : Capacitors shall be mounted on the pc board with their lead wires anchored at 4mm max. of their bodies, except for the capacitors with the case size ϕ 16 $\times$ 30L, whose lead wire shall be anchored at 1mm max. of their bodies The body of the capacitor with 12.5mm or larger in diameter or 25mm or longer in length, in addition, shall be anchored to the pc board with a fixture.

〔Criteria〕 Appearance : No significant damage, legible marking, and no electrolyte leakage.
Capacitance change : Shall be within $\pm$ 5% of the initial measured value.

8.9 Damp heat

〔Conditions〕 Test temperature : + 40 $\pm$ 2℃
Relative humidity : 90 to 95%RH
Test time : 240 $\pm$ 8 hours

〔Criteria〕 Appearance : No significant damage, legible marking, and no electrolyte leakage.
Leakage current : Shall not exceed the initial specified value.
Capacitance change : Shall be within $\pm$ 20% of the initial measured value.
Tan δ : Shall not exceed 120% of the initial specified value.

8.10 Endurance

〔Conditions〕 After the capacitors are put to a DC voltage with the rated ripple current within the rated voltage for the specified test of time at + 105 $\pm$ 2℃ , the following specifications shall be satisfied when the capacitors are restored to + 20℃ . The sum of a DC voltage and a peak AC voltage must not exceed their full rated voltage.
Specified test time : 6,000 $^{+72}_{0}$ hours

〔Criteria〕 Appearance : No significant damage, legible marking, and no electrolyte leakage.
Leakage current : Shall not exceed the initial specified value.
Capacitance change : Shall be within $\pm$ 25% of the initial measured value.
Tan δ : Shall not exceed 200% of the initial specified value.

8.11 Surge voltage test

〔Conditions〕 Test temperature : + 15 to + 35℃
Series protective resistor : 1000 $\pm$ 10 Ω
Test voltage : Surge voltage shown in Table-1
Applying of voltage : 30 $\pm$ 5 seconds every 6 $\pm$ 0.5minutes.
Test cycle : 1000cycle.

〔Criteria〕 Appearance : No significant damage and no electrolyte leakage.
Leakage current : Shall not exceed the initial specified value.
Capacitance change : Shall be 80% or more of the initial measured value.
Tan δ : Shall not exceed 200% of the initial specified value.

8.12 Pressure relief vent

〔Conditions〕 Apply a reverse voltage with the DC current of 1 amp.(DC reverse voltage test)

〔Criteria〕 When the pressure relief vent operated, the capacitor shall not flame although emission of gas or a part of the inside element is allowable.
If the vent does not operate with the voltage applied for 30 minutes, the test is considered to be passed.

8.13 High Temperature Storage

〔Conditions〕 The following specifications shall be satisfied when the capacitors are restored to + 20℃ after exposing them for 500 $^{+24}_{0}$ hours at + 105 $\pm$ 2℃ without an applied voltage. Before the measurements, the capacitor shall be preconditioned by applying voltage according to Item 4.1 of JIS C 5101-4.

〔Criteria〕 Appearance : No significant damage, legible marking, and no electrolyte leakage.
Leakage current : Shall not exceed the initial specified value.
Capacitance change : Shall be within $\pm$ 25% of the initial measured value.
Tan δ : Shall not exceed 200% of the initial specified value.

8.14 High and Low Temperature characteristics

〔Conditions〕

Step	Temperature [℃]
1	＋ 20 ± 2
2	－ 25 ± 3, － 40 ± 3
3	＋ 105 ± 2

Step 1：Measure capacitance , tan δ and impedance
Step 2：Measure impedance
Step 3：Measure capacitance, tan δ and a leakage current.

〔Criteria〕 Step 2：Impedance ratio shall not exceed the values shown in Table attached.

[120Hz]

Z － 25℃ /Z ＋ 20℃	2
Z － 40℃ /Z ＋ 20℃	3

9 Others

9.1 Export Trade Control Ordinance (When our product our is exported from Japan)

(1) Export Trade Control Ordinance (Section 1 through 15 of Appendix Table 1)

Export regulation of the capacitors for pulse use (750V or higher) and the capacitors for high voltage (5,000V or higher) is carried out sccording to (item 41-4) in Section 2 of Appendix Table 1 (Section 49 in Chapter 1 of METI's Ordinance) and (item 7) in Section 7 of Appendix Table 1 (Section 6 in Chapter 6 of METI's Ordinance). However, the aluminum electrolytic capacitors, which are described in this specification, don't fulfill the regulated level. Therefore, the aluminum electrolytic capacitors are not applicable to Export Trade Control Ordinance.

(2) Export Trade Control Ordinance (Section 16 of Appendix Table 1)

The aluminum electrolytic capacitors, which are described in this specification, applicable to goods under Export Regulations (Category 85 of Appendix Table in Customs Tariff Law) based on Section 16 of Appendix Table 1 in Export Trade Control Ordinance.

If the exporter got information that their exporting goods are used to any development of massive weapon, the exporter must apply for exporting permission to Ministry of Economy, Trade and Industry (METI), and get METI's approval.

Regardless of the above, if the exporter is notified by METI that his/her exporting goods are potentially used to any development of extensive destructive weapons, the exporter must seek permission from METI to export, and get METI's approval. When Nippon Chemi-Con receives such notice from METI, we will inform your company of that.

9.2 Cleaning PC board

(1) Alcohol system

Higher alcohol system / Isopropyl alcohol cleaning agents

Recommended cleaning agents:

Pine Alpha ST-100S (Arakawa Chemical)

Clean Through 750H, 750HS and 750J (Kao)

Cleaning conditions:

Using these cleaning agents, capacitors are capable of withstanding immersion or ultrasonic cleaning for 10 minutes at a maximum liquid temperature of 60℃ . Find optimum conditions for washing, rinsing, and drying. Be sure not to rub off the marking of the capacitors by coming in contact with any other components or the PC board. Note that shower cleaning adversely affects the markings on the sleeve.

It is necessary to maintain a flux content in the cleaning liquid in of 2 Wt.% or less, and to control for alkaline components not to remain in the final cleaning process.

end not using them as much as possible.

9.3 Manufacturing plant

CHEMI-CON EAST JAPAN CORPORATION MIYAGI PLANT (JAPAN)
P.T. INDONESIA CHEMI-CON (INDONESIA)
TAIWAN CHEMI-CON (TAIWAN)
SAMYOUNG ELECTRONICS CO., LTD. (KOREA)
QINGDAO SAMYOUNG ELECTRONICS CO., LTD. (CHINA)
CHEMI-CON (WUXI) CO., LTD. (CHINA)

9.4 For aluminum electrolytic capacitors, please refer to PRECAUTIONS AND GUIDELINES.

STANDARD RATINGS

WV [Vdc]	Cap [μ F]	Case size φ D × L [mm]	tan δ Max.	LC [μ A] Max.	Impedance [Ω Max./100kHz]		Rated ripple current [mArms/105℃]	Part No.
				2minutes	20℃	－ 10℃	100kHz	
16	680	8 × 15	0.16	108	0.048	0.15	1210	EKZH160EC3681MH151

Precautions and Guidelines (Aluminum Non-Solid Electrolytic Capacitors)

The circuits described as examples in the catalog and the "specifications" are featured in order to show the operations and usage of our products, however, this fact does not guarantee that the circuits are available to function in your equipment systems.
We are not in any case responsible for any failures or damage caused by the use of information contained herein.
You should examine our products, of which the characteristics are described in the "specifications" and other documents, and determine whether or not our products suit your requirements according to the specifications of your equipment systems. Therefore, you bear final responsibility regarding the use of our products.
Please make sure that you take appropriate safety measures such as use of redundant design and malfunction prevention measures in order to prevent fatal accidents and/or fires in the event any of our products malfunction.

【1】Device circuits design considerations

1) Confirm installation and operating requirements for capacitors, then use them within the performance limits prescribed in this catalog or product specifications.

2) Polarity

Aluminum electrolytic capacitors are polarized.

Never apply a reverse voltage or AC voltage. Connecting with wrong polarity will short-circuit or damage the capacitor with the pressure relief vent opening early on. To identify the polarity of a capacitor, see the relevant diagram in the catalogs or product specifications, or the polarity marking on the body of the capacitor.
Incidentally, the rubber end seal bungs of the radial lead type capacitors have a solder-flux gas escaping configuration, which is nothing to do with the polarity of the capacitors. For circuits where the polarity is occasionally reversed, use a bi-polar type of aluminum electrolytic capacitor. However, note that even bi-polar type capacitors must not be used for AC circuits.

3) Operating voltage

Do not apply an over-voltage that exceeds a rated voltage specified for the capacitors.

The total peak value of the ripple voltage plus the DC voltage must not exceed the rated voltage of the capacitors. Although capacitors specify a surge voltage that exceeds the full rated voltage, it does not assure long-term use but limited use under specific conditions.

4) Ripple current

Do not apply an overcurrent that exceeds the rated ripple current specified for the capacitors.

Excessive ripple current will increase heat production within the capacitors, causing the capacitors to be damaged as follows:

- Shorten lifetime
- Open pressure relief vent
- Short circuit

The rated ripple current is specified along with a specific ripple frequency.
Where using the capacitors at any other ripple frequency other than the specified frequency, calculate the allowable ripple current by multiplying the rated ripple current by a frequency compensation factor (Frequency Multiplier) specified for each product series.

5) Operating temperature (Category temperature)

Do not apply high temperatures that exceed the upper limit of the category temperature range specified for the capacitors.

Using the capacitor at temperatures higher than the upper limit will considerably shorten the lifetime of the capacitor and make the pressure relief vent open.
In other words, lowering ambient temperatures will extend the expected lifetime of the capacitors.

6) Lifetime

Select the capacitors to meet the service life requirements of a device.

7) Charging and discharging

Do not use capacitors in circuits intended for rapid charge and discharge cycle operations.

If capacitors are used in the circuits that repeat a charge and discharge with a large voltage drop or a rapid charge and discharge at a short interval cycle, capacitance will decrease and/or the capacitors will be damaged by internal heat generation.
Consult us for a heavy charge and discharge type of capacitor so that the capacitor will be designed in accordance with requirements of duty cycle of charge and discharge, the number of cycles, discharging resistance and operating temperatures.

8) Failure mode of capacitors

Non-solid aluminum electrolytic capacitors have a limited lifetime which ends in an open circuit failure mode, in general.
Depending on the product type and operating conditions, the failure mode may involve in opening of the pressure relief vent.

9) Capacitor insulation

Electrically isolate the following sections of a capacitor from the negative terminal, the positive terminal and the circuit patterns.

- The outer can case of a non-solid aluminum capacitor.
- The dummy terminal of a snap-in type non-solid aluminum capacitor, which is designed for mounting stability.

10) Outer sleeve

The outer sleeve of a capacitor does not assure electrical insulation (except for screw-terminal type capacitors). It should not be used where electrical insulation is required.

11) Operating conditions

Do not use/expose capacitors to the following conditions:

(1) Direct contact with water, salt water or oil, or high condensation environment.

(2) Direct sunlight.

(3) Toxic gases such as hydrogen sulfide, sulfurous acid, nitrous acid, chlorine and its compounds, bromine and its compounds and ammonium.

(4) Ozone, ultraviolet rays or radiation.

(5) Extreme vibration or mechanical shock that exceeds limits in the catalogs or product specifications.
The standard vibration condition is applicable to JIS C 5101-4.

12) Mounting

(1) Non-solid aluminum electrolytic capacitors contain paper separators and electric-conductive electrolyte that contains organic solvent as main solvent material, both of which are flammable. If the electrolyte leaks onto a printed circuit board, it can erode the device circuit pattern, may short-circuit the copper traces, smoke and burn. Make sure of designing a PC board as follows:

- Provide the appropriate hole spacing on the PC board to match the terminal spacing of a capacitor.
- Provide the following adequate clearance space over the pressure relief vent of a capacitor to avoid blocking the correct opening of the pressure relief vent.

Case diameter	Clearance
ϕ 8(6.3) to ϕ 16mm	: 2mm minimum
ϕ 18 to ϕ 35mm	: 3mm minimum
ϕ 40 mm and above	: 5mm minimum

- Do not locate any wire or circuit pattern over the pressure relief vent of a capacitor.
- If a capacitor is mounted with its pressure relief vent facing down on the PC board, provide a ventilation hole in the board beneath it to let gas escape when the vent opens.
- Do not print any copper trace under the seal (terminal) side of a capacitor. Copper traces should be 1 mm (preferably 2mm or more) spaced apart from the side of the capacitor body.
- Avoid locating any heat source components near capacitors or on the opposite side of the PC board under capacitors.
- In designing a double-sided PC board, do not locate any through-hole via or unnecessary hole underneath a capacitor.
- In designing a double-sided PC board, do not print any circuit pattern underneath a capacitor.

(2) For a screw terminal type capacitor, tightening the terminal screws and the mounting clamp should be within the maximum torque specified in the catalogs or product specifications. Do not mount a screw terminal type capacitor with the terminals facing downward. Also, if the body of a capacitor is installed horizontally such as being laid on its side, do not position the pressure relief vent downward.

(3) For a chip type capacitor, design the land patterns of the PC board in accordance with the recommended footprint dimensions described in the catalogs or product specifications.

13) Using capacitors for significantly safety-oriented applications

Consult with us in advance of usage of our products in the following listed applications. ① Aerospace equipment ② Power generation equipment such as thermal power, nuclear power etc. ③ Medical equipment ④ Transport equipment (automobiles, trains, ships, etc.) ⑤ Transportation control equipment ⑥ Disaster prevention / crime prevention equipment ⑦ Highly publicized information processing equipment ⑧ Submarine equipment ⑨ Other applications that are not considered general- purpose applications.
Note that some products such as photoflash use capacitors which have been designed for specific applications cannot be used for any other application.

14) Others

Design device circuits taking into consideration the following conditions:

(1) Electrical characteristics of a capacitor depend on the temperature and frequency. In designing the device circuits, consider the change in the characteristics.

(2) If using more than one capacitor connected in parallel, design the device circuits to balance the current flow in individual capacitors.

(3) If using more than one capacitor connected in series, connect shunting resistors in parallel with the individual capacitors to balance the voltage.

【2】Installation

1) Assembling

(1) Do not try to reuse the capacitors once assembled and electrified, except only capacitors that are taken from a device for periodic inspection to measure their electrical characteristics.

(2) Capacitors may have been spontaneously recharged with time by a recovery voltage phenomenon. In this case, discharge the capacitors through a resistor of approximately 1k Ω before use.

(3) If non-solid aluminum electrolytic capacitors have been stored at any conditions more than 35℃ and 75%RH for long storage periods of time more than the limits specified in the catalogs or product specifications, they may have high leakage current. In this case, make pre-conditioning by applying the rated voltage through a resistor of approximately 1k Ω .

(4) Confirm the rated capacitance and voltage of capacitors before installation.

(5) Confirm the polarity of capacitors before installation.

(6) Do not try to use the capacitors that were dropped to the floor and so forth.

(7) Do not deform the can case of a capacitor.

(8) Make sure that the terminal spacing of a capacitor equals the holes spacing on the PC board before installing the capacitor. For radial lead type capacitors, some standard pre-formed lead types are also available.

(9) When installing a snap-in type capacitor on the PC board, insert the terminals into the holes and press the capacitor down until the body is settled flush on the surface of the PC board (without the body standing off).

(10) Do not apply excessive mechanical force to capacitors more than the limits prescribed in the catalogs or product specifications. Avoid excessive mechanical force while the capacitors are in the process of vacuum-picking, placing and positioning by automatic mounting machines or cutting the lead wires by automatic insertion machines.

2) Soldering and heat resistance

(1) For soldering using a soldering iron, consider the following conditions:
- Soldering conditions (temperature and time) should be within the limits prescribed in the catalogs or product specifications.
- If it is necessary to pre-form the terminal spacing of a capacitor to match the hole spacing on the PC board before assembly and soldering, do not make mechanical stress reach into the body of the capacitor but only the lead wires.
- Do not touch the body of a capacitor with the hot tip of the soldering iron.

(2) For flow soldering, consider the following conditions:
- Do not dip the body of a capacitor into a solder bath.
  Expose only the terminals to the melt solder with the PC board interposing between the solder and the body of the capacitor. Solder only the reverse side of the PC board where the body of the capacitor is not located.
- Soldering conditions should be within the limits prescribed in the catalogs or product specifications.
- Do not apply flux to any part of a capacitor other than the terminals.
- Do not let any other component lean against nor come into contact with the capacitor while soldering.

(3) For reflow soldering, consider the following conditions:
- Soldering conditions (preheat, reflow temperature and time) should be within the limits prescribed in the catalogs or product specifications.
- When using the infrared heater and setting its temperatures, adjust the heating levels taking into consideration that the color and materials of a capacitor vary in their infrared absorbance.
- The allowable number of reflow passes is specified in the catalogs or product specifications.
- When mounting a capacitor on the double-sided PC board, do not place any wiring pattern underneath the capacitor.
- Please consult us about vapor phase soldering (VPS).

(4) Do not try to reuse the capacitor that was removed from the PC board after soldering.

(5) Only use chip type capacitors for reflow soldering. The other type capacitors are not designed for the reflow.

3) Handling after soldering

After soldering the PC board, do not apply the following mechanical stress to the capacitor:

(1) Do not tilt, push down or twist the body of the capacitor.

(2) Do not grab the body of the capacitor to carry the assembly board.

(3) Do not hit anything against the capacitor. When stacking the assembled boards, do not put any of the PC boards or other components against the capacitor.

(4) Do not drop the assembled board.

4) Cleaning assembly boards

(1) Do not clean capacitors with the following cleaning agents:
- Halogenated solvents : cause capacitor failures due to corrosion.
- Alkali system solvents : corrode (dissolve) the aluminum can case.
- Terpene and petroleum system solvents : deteriorate the rubber seal materials.
- Xylene and toluene : deteriorates the rubber seal materials as well.
- Acetone : erases the markings printed on a capacitor.

Where cleaning is necessary, use only solvent resistant type capacitors that have been assured for the cleaning within the specific cleaning conditions prescriber in the catalogs or product specifications. In particular, carefully set up the conditions for ultrasonic cleaning system.

(2) Where cleaning the solvent resistance type of aluminum electrolytic capacitors, confirm the following conditions:

- Control the contamination (the conductivity, pH, specific gravity, water content, etc.) of the cleaning agents.
- After the cleaning, do not leave the capacitors (assembly boards) in an environment of cleaning agent-rich or in a closed container. Sufficiently evaporate the residual cleaning agent from the assembly boards and the capacitors by forced hot air at temperatures less than the upper limit of category temperature range for more than 10 minutes. In general, aluminum electrolytic capacitors are sensitive to contamination of halogen ions (particularly to chlorine ions). Depending on the properties of the electrolyte and rubber seal materials used in a capacitor, the halogen ions lead up to catastrophic failures on the capacitor. Where the inside of a capacitor has been contaminated with more than a certain amount of halogen ions and the capacitor is in use, the corrosion reaction of aluminum occurs. The corrosion causes the capacitor to have a significant increase in leakage current with heat produced, open the pressure relief vent and become open circuit mode failure. Due to global environmental issues (greenhouse effects and other environmental destruction by depletion of the ozone layer), the conventional cleaning solvents of CFC 113, Trichloroethylene and 1,1,1-tricholoroethylene were replaced by substitutes. The following are some substitute cleaning agents and allowable cleaning conditions:

a) Fatty-alcohol cleaning agents

Pine Alpha ST-100S (Arakawa Chemical)

Clean Through 750H, 750HS and 750J (Kao)

〔Compatible capacitor products〕

Terminal Shape	Subject Series
Surface Mount Type	All Series
Radial Lead Type	All Series
Snap-in Type	All Series (Less and equal 100V$_{dc}$)

[Cleaning conditions]

Either of immersion or ultrasonic cleaning, for a maximum of 10 minutes and at a maximum liquid temperature of 60℃ is acceptable. Make sure that the markings on the capacitor are not rubbed against any other component or the PC board during cleaning. Note that shower cleaning affects the markings on the capacitor.

b) HCFC (Freon 225) as Alternative CFCs

AK225AES (Asahi Glass)

[Cleaning conditions]

Solvent resistant type capacitors, which were originally developed to intend to resist Freon TE or Freon TES, are also capable of withstanding any one of immersion, ultrasonic or vapor cleaning, for a maximum of 5 minutes (or 2 minutes for KRE series capacitors or 3 minutes for SRM series). However, this type of cleaning agent is not recommended to use, as the cleaning materials may be banned in near future in view of global environmental issues.

c) IPA (Isopropyl Alcohol)

Immersion cleaning with a maximum flux concentration of 2 wt% is acceptable.

5) Adhesives and coating materials

(1) Do not use any adhesive or coating materials containing halogenated solvents.

(2) Make sure of the following conditions before applying adhesive or coating materials to a capacitor,

- No flux residue nor stain is left between the rubber seal of a capacitor and PC board.
- Dry the capacitor to remove residual cleaning agents before applying adhesive and coating materials. Do not cover up the entire surface of the rubber seal of the capacitor with adhesives or coating materials.
- Heating and curing conditions for adhesives and coating materials should be followed as prescribed in the catalogs or product specifications.
- Covering up the entire surface of the rubber seal with resin mold materials will obstruct the normal diffusion of internal hydrogen gas from a capacitor and result in serious failures. Also, where the adhesive and coating materials contain a large amount of halogen ions, the halogen ions will contaminate the inside of the capacitor through the rubber seal materials, causing the capacitor to become a failure.
- Depending on solvent materials that the adhesive or coating materials contains, note that the outer sleeve of a capacitor may lose a gloss or whiten in appearance.

6) Fumigation

In exporting or importing electronic devices, they may be exposed to fumigation with halide such as methyl bromide.

Where aluminum electrolytic capacitors are exposed to halide such as methyl bromide, the capacitors will be damaged with the corrosion reaction with halogen ions in the same way as cleaning agents. For the export and import, Nippon Chemi-Con considers using some packaging method and so forth so that fumigation is not required. For customers to export or import electronic devices, semi-assembly products or capacitor components, confirm if they will be exposed to fumigation and also consider final condition of packaging. (Note that either cardboard or vinyl package has a risk of fumigation gas penetration.)

【3】Precautions during operation of devices

1) Never touch the terminals of a capacitor directly with bare hands.
2) Do not short-circuit between the capacitor terminals with anything conductive. Also, do not spill any conductive liquid such as acid or alkaline solution over a capacitor.
3) Confirm environmental conditions where the device will be placed. Do not use the devise in the following environmental conditions:
   (1) Water or oil spatters, or high condensation environment.
   (2) Direct sunlight.
   (3) Ozone, ultraviolet rays or radiation.
   (4) Toxic gases such as hydrogen sulfide, sulfuric acid, nitrous acid, chlorine and its compounds, bromine and its compounds and ammonium.
   (5) Extreme vibration or mechanical shock that exceeds the limits in the catalogs or product specifications.
   The standard vibration condition is applicable to JIS C 5101-4.

【4】Maintenance inspections

1) For industrial use capacitors, make periodic inspections of the capacitors. Before the inspections, turn off the power supply of the device and discharge the electricity of the capacitors. Where checking it by a volt-ohm meter, confirm the polarity beforehand. Do not apply mechanical stress to the terminals of the capacitors during inspection.
2) Characteristics to be inspected
   (1) Significant damage in appearance: vent opening, electrolyte leakage, etc.
   (2) Electrical characteristics: leakage current, capacitance, tan δ and other characteristics prescribed in the catalogs or product specifications
   If finding anything abnormal on the characteristics above, check the specifications of the capacitor and take appropriate actions such as replacement.

【5】Capacitor venting

1) A capacitor with more than a certain case size has the pressure relief vent functioning to escape abnormal gas pressure increase.
   If gas expels from a venting capacitor, disconnect the power supply of the device or unplug the power supply cord. If not disconnecting the power supply, the device circuit may be damaged due to the short circuit failure of the capacitor or short-circuited with the liquid that the gas was condensed to.
   It may cause secondary damages such as device burnout in the worst case scenario.
   The gas that comes out of the open vent is vaporized electrolyte, not smoke.
2) The gas expelled from a venting capacitor is more than100° C.
   Never expose your face to the capacitor. If your eyes are exposed to the gas or you inhale it, immediately flush your eyes and/or gargle with water. If the electrolyte comes in contact with the skin, wash with soap and water.

【6】Storage

1) Do not store capacitors at high temperature or high humidity.
   Store the capacitors indoors at temperatures of 5 to 35℃ and humidities of less than 75%RH.
   In principle, aluminum electrolytic capacitors should be used within three years after production.
2) Keep capacitors packed in the original packaging material wherever possible.
3) Avoid the following storage environmental conditions:
   (1) Water spattering, high temperatures, high humidity or condensation environment.
   (2) Oil spattering or oil mist filled.
   (3) Salt water spattering or salt filled.
   (4) Acidic toxic gases such as hydrogen sulfide, sulfuric acid, nitrous acid, chlorine, bromine and methyl bromide filled.
   (5) Alkaline toxic gases such as ammonium filled.
   (6) Acid or alkaline solutions spattering.
   (7) Direct sunlight, ozone, ultraviolet rays or radiation.
   (8) Extreme vibration or shock loading
4) JEDEC J-STD-020 is not applicable.

【7】Capacitor disposal

Please consult with a local organization for the proper disposal of industrial waste. For incinerating capacitors, apply a hightemperature incineration (over 800 ℃). Incinerating them at temperatures lower than that may produce toxic gases such as chlorine. To prevent capacitors from explosion, punch holes in or sufficiently crush the can cases of the capacitors, then incinerate.

【8】About AEC-Q200

The Automotive Electronics Council (AEC) was originally established by major American automotive related manufactures. Today, the committees are composed of representatives from the sustaining Members of manufacturing companies in automotive electrical components. It has standardized the criteria for "stress test qualification" and "reliability tests" for electronic components.

AEC-Q200 is the reliability test standard for approval of passive components in Automotive applications. It specifies the test type, parameters and quantity, etc. for each component. The criteria of the reliability tests such as for our main products, "Aluminum Electrolytic Capacitors" are described in this standard.

Pursuant to the customer's specific testing requirements, Chemi-Con submits the test results according to AEC-Q200 for Aluminum Electrolytic Capacitors used in automotive applications on request.

An electronic component manufacturer cannot simply claim that their product is "AEC-Q200 Qualified". It can be claimed "Compliant", "Capable", "Available", etc., however each component must be tested per each users "Qualification Test Plan" in order to claim AEC-Q200 status.

Please contact us for more information.

【9】Response to the Substances of Concern

1) Nippon Chemi-Con aims for developing products that meet laws and regulations concerning substances of concern.
(Some products may contain regulated substances for exempted application)
Please contact us for more information about law-compliance status.

2) According to the content of REACH handbook (Guidance on requirements for substances in articles which is published on May 2008), our electronic components are "articles without any intended release". Therefore they are not applicable for "Registration" for EU REACH Regulation Article 7 (1). Reference: Electrolytic Condenser Investigation Society "Study of REACH Regulation in EU about Electrolytic Capacitor"(publicized on 13 March 2008)

【10】Safety Application Guide

For more details, refer to JEITA RCR-2367D (March 2019) with the title of "Safety Application Guide for fixed aluminum electrolytic capacitors for use in electronic equipment".