THIS DRAWING IS UNPUBLISHED. RELEASED FOR PUBLICATION -,- .
© COPYRIGHT - By - ALL RIGHTS RESERVED.

REVISIONS					
P	LTR	DESCRIPTION	DATE	DWN	APVD
	C	ECR-17-014058	05FEB2018	HZ	RS

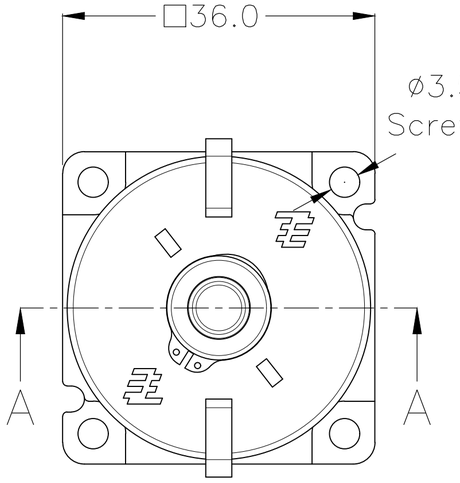

ASSEMBLED 2061433-1
(cord not shown)

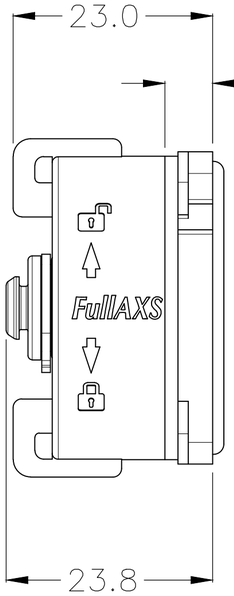

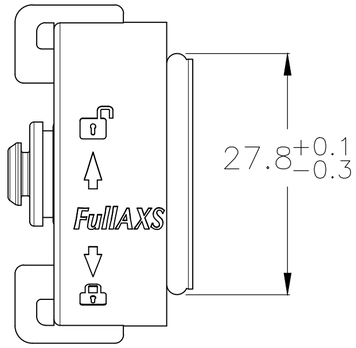

FULLAXS BULKHEAD CAP
(Housing not shown)

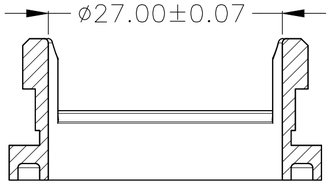

SECTION A-A
(Cap not shown)

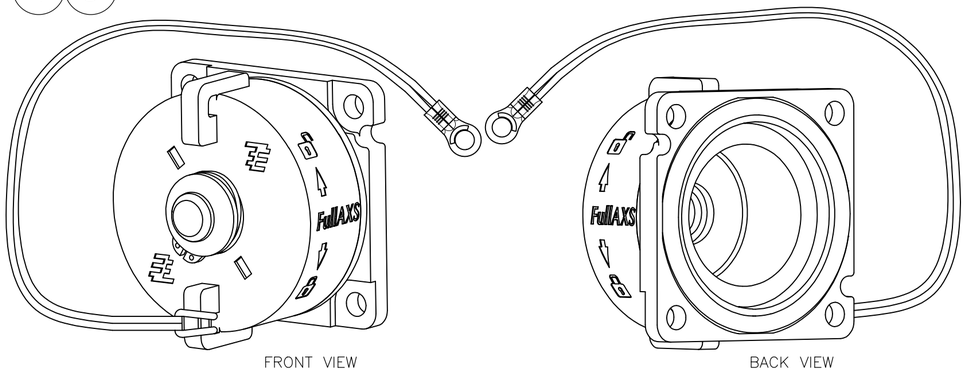

FRONT VIEW BACK VIEW

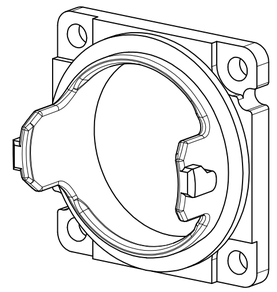

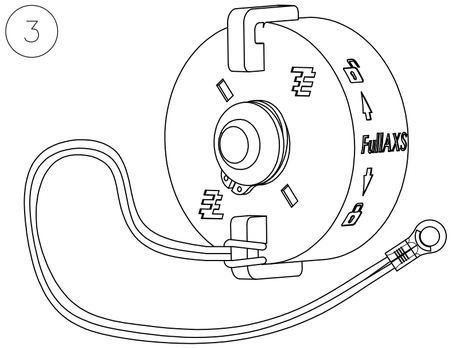

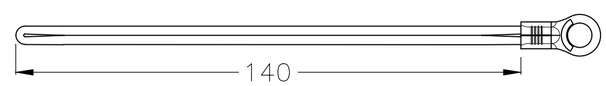

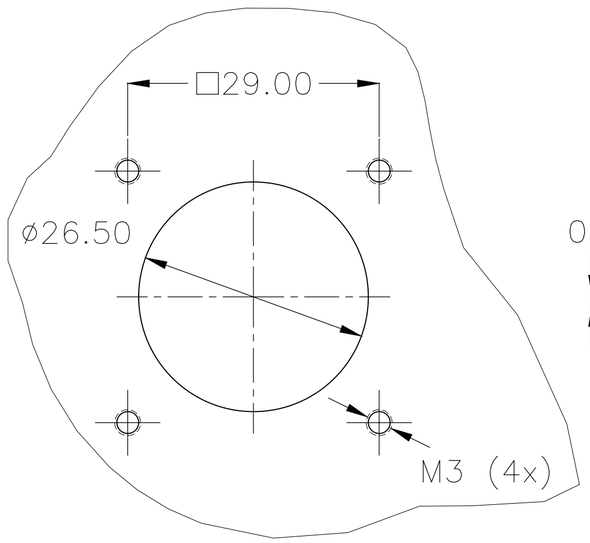

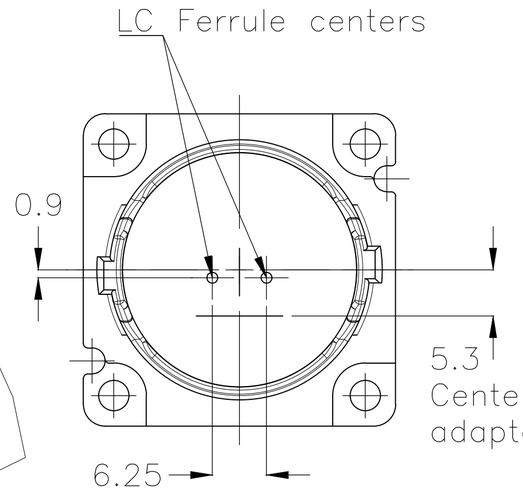

Recommended panel cutout
for the assembly and housing

NOTE:

1 SHOWN DIMENSIONS ARE FOR REFERENCE ONLY
2 THE CLIP ON CAP CAN PASS 24DAYS CORROSION TEST (INCLUDE 14 DAYS SALT SPRAY AND 10DAYS MOIST SO_2 EXPOSURE)

ITEM	TE PART NUMBER	DESCRIPTION
1	2061433-1	FOKIT FULLAXS BULKHEAD ASSEMBLY
2	2061433-2	FOAC FULLAXS BULKHEAD HOUSING
3	2061433-3	FOAC FULLAXS BULKHEAD CAP
4	2061433-4	FOAC FULLAXS BULKHEAD CAP STRAP
2 5	2061433-5	FOKIT FULLAXS BULKHEAD ASSEMBLY

THIS DRAWING IS A CONTROLLED DOCUMENT.

DIMENSIONS: mm

TOLERANCES UNLESS OTHERWISE SPECIFIED:
0 PLC ± -
1 PLC ± -
2 PLC ± -
3 PLC ± -
4 PLC ± -
ANGLES ± -

MATERIAL -
FINISH -

DWN R. COOLEN 10JUN2010
CHK M. SCHOLTEN 17MAY2013
APVD A. HENGELMOLEN 17MAY2013
PRODUCT SPEC —
APPLICATION SPEC —
WEIGHT 0.000000

TE Connectivity

NAME FOKIT FULLAXS BULKHEAD ASSEMBLY

SIZE	CAGE CODE	DRAWING NO	RESTRICTED TO
A2	00779	C-2061433	—

CUSTOMER DRAWING | SCALE NTS | SHEET 1 OF 1 | REV C

2061433