This document is the property of Xinshengyue Corporation and is delivered on the express condition that it is not to be disclosed, reproduced or used, in whole or in part, for manufacture or sale by anyone other than Xinshengyue Corporation without its prior concert&that no right is granted to disclose or to use any information in this document.

REV.	ECN NO.	DESCRIPTION	DATE	DESIGN
A	ECN NO.	NEW DRAWING	2026.05.04	Janus

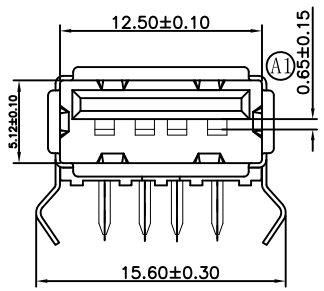

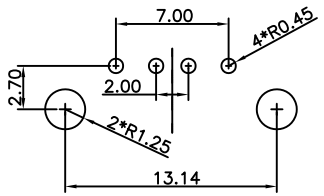

LAYOUT P.C.B

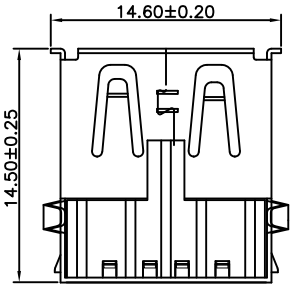

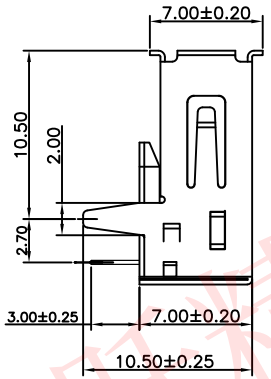

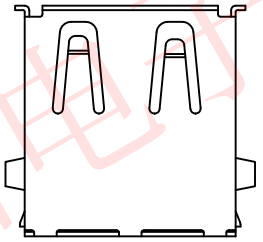

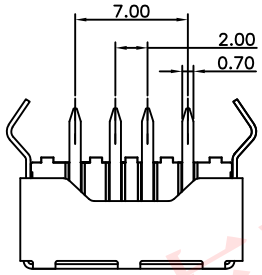

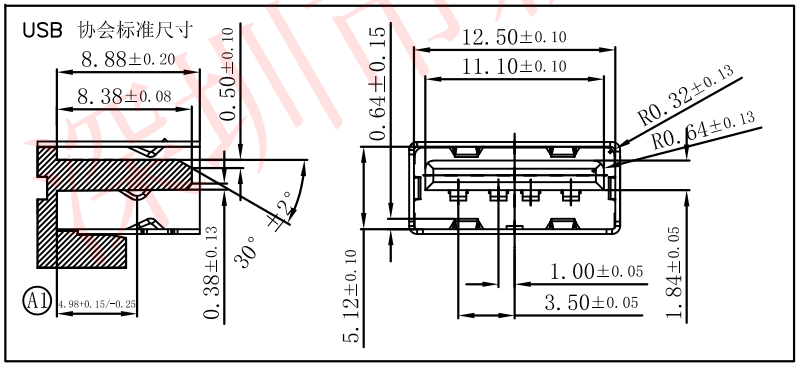

备注:

1. 材质:
   - 1-1. 主体:PBT, White
   - 1-2. 端子:黄铜 T=0.25±0.01
     (表面处理:整体镀镍40u",
     焊接区镀锡80u",接触区镀金G/F)
   - 1-3. 外壳:铁料, T=0.30mm, 镀镍30U" MIN
2. 电测:
   - 2-1. 接触阻抗:30MILLIOHMS MAX
   - 2-2. 绝缘阻抗:100 MEGA OHMS MIN
   - 2-3. 耐电压:500V AC ONE MIN LEVEL
   - 2-4. 工作温度:-20° C~ 85° C
3. 所用材质需符合RoHS标准。

P/N: 103041-120101

- 1:DIP
- PACKAGING:2.TRAY
- SERIES NUMBER:01~99
- CONTACT AREA PLATED 1: Au G/F
- SOLDER AREA PLATED 0: SN

TOLERANCE		NAME(INTENDED USE) CUSTOMER DRAWING	XSUA® 深圳市新升跃精密电子有限公司 SHENZHEN XINSHENGYUE PRECISION ELECTRONICS CO., LTD
X.X ±0.30	X.° ±10°	PART NO.	TITLE: USB AF单层90度DIP卷边带后盖弯脚15.60
.XX ±0.20	.X° ± 8°		
.XXX ±0.10	.XX° ± 5°		
UNITS	mm	DESIGN: Arvin	DRAWG NO. C-103041
MATERILA		CHED:	SCALE 1:1 / SHEET 1/2 / REV. A
FINISH		APPD:	

深圳市新升跃精密电子有限公司

This document is the property of Xinshengyue Corporation and is delivered on the express condition that it is not to be disclosed, reproduced or used, in whole or in part, for manufacture or sale by anyone other than Xinshengyue Corporation without its prior concert&that no right is granted to disclose or to use any information in this document.

REV.	ECN NO.	DESCRIPTION	DATE	DESIGN
A	ECN NO.	NEW DRAWING	2026.05.04	Janus

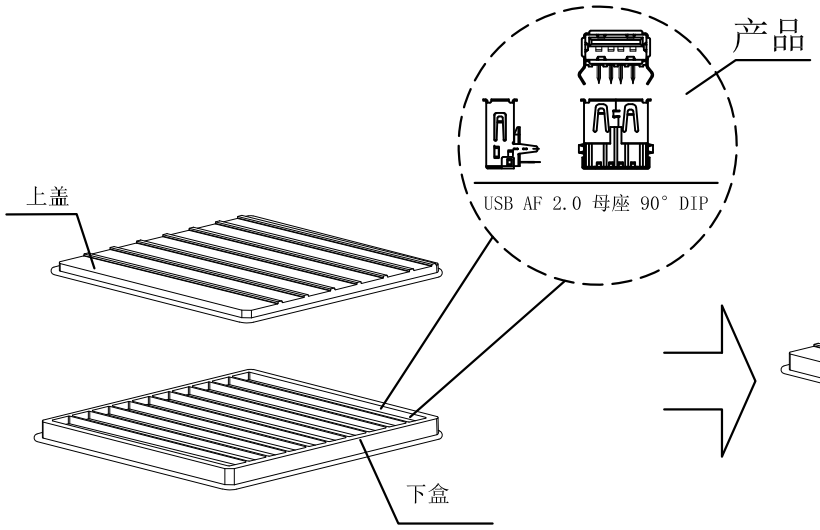

① PE真空格子盒(1Set).

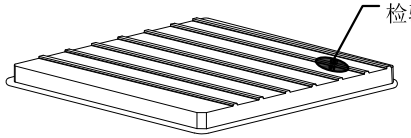

② 100Pcs/盒,四周不用打钉.

贴上"QC"
检验标签

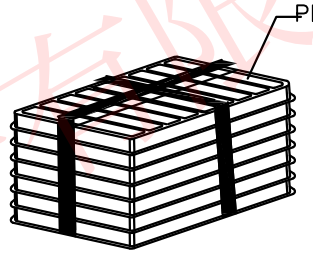

③ 10或15盘/摞,用PE膜捆紧

PE膜捆紧

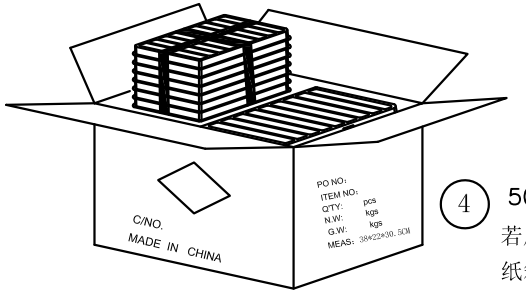

④ 50盒/箱(5000PCS),共4摞(10盘和15盘各2摞)
若尾数箱在空间处加装填充物.
纸箱规格：34*22*32CM

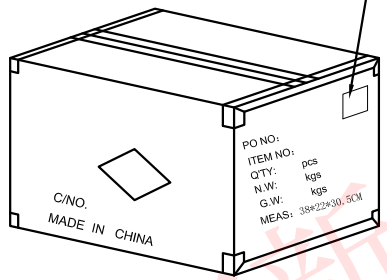

⑤ 外箱用透明胶纸带封"工"字型.
依图示粘贴产品或其它标签.

备注：
1.PE真空盒1Set
2.每盘装成品100Pcs，四周不用打钉;
每10盘为一摞,用PE膜捆紧,并贴上相对应的标签;
3.每箱装50盒，数量共计5000PCS;
4.每箱尺寸与规格印刷：详见包材图面;
5.外箱用透明胶纸带封"工"字型;
6.依外箱右上角图示位置粘贴好产品或其它要求的标签。（若客户另有贴标签要求,则按其定单注明之要求贴）
7.包规适用于USB A/F 单层母座系列。

TOLERANCE		NAME(INTENDED USE) CUSTOMER DRAWING	XSUA® 深圳市新升跃精密电子有限公司 SHENZHEN XINSHENGYUE PRECISION ELECTRONICS CO., LTD
X.X ±0.30	X.° ±10°	PART NO.	TITLE: USB AF单层90度DIP卷边带后盖弯脚15.60
.XX ±0.20	.X° ± 8°		
.XXX ±0.10	.XX° ± 5°	DESIGN: Arvin	DRAWG NO. C-103041
UNITS	mm		SCALE 1:1 / SHEET 2/2 / REV. A
MATERILA		CHED:	
FINISH		APPD:	

深圳市新升跃精密电子有限公司