This document is the property of Xinshengyue Corporation and is delivered on the express condition that it is not to be disclosed, reproduced or used, in whole or in part, for manufacture or sale by anyone other than Xinshengyue Corporation without its prior concert&that no right is granted to disclose or to use any information in this document.

REV.	ECN NO.	DESCRIPTION	DATE	DESIGN
A	ECN NO.	NEW DRAWING	2025.07.16	Janus

RoHS COMPLIANT

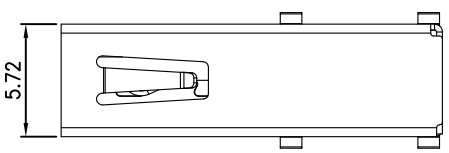

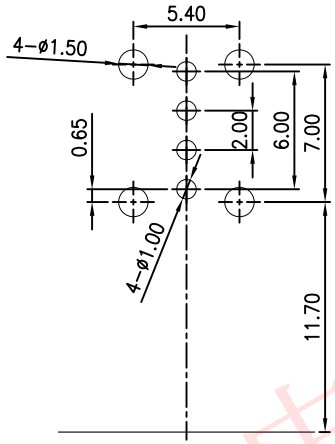

NOTE:
MATERIAL:
1.HOUSING: PBT UL94 V-0
2.CONTACT: BRASS T=0.25
(SURFACE PLATING:AuG/F+Sn80u"+Ni50u")
3.SHEEL:SPCC OR BRASS T=0.30
(SURFACE PLATING: Cu80u+Ni80u"

SPECIFICATIONS:
1.CONTACT CURRENT RATING:1.5A MAX.
2.CONTACT RESISTANCE: 30 MΩ MAX.
3.WITHSTANDING VOLTAGE:500V AC MIN.
4.INSULATION RESISTANCE: 1000 MΩ MIN.

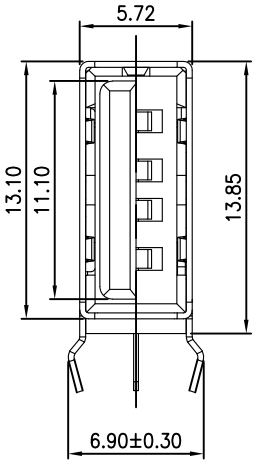

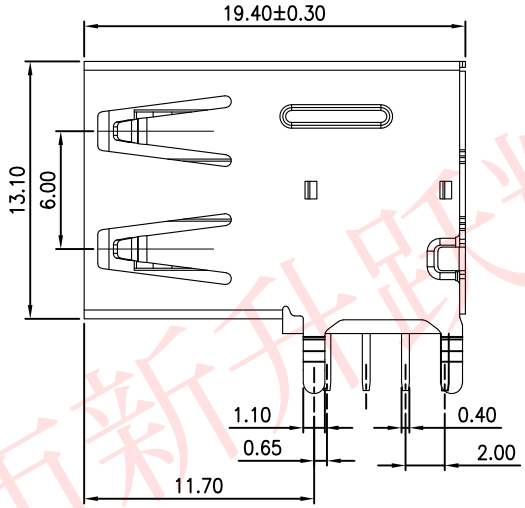

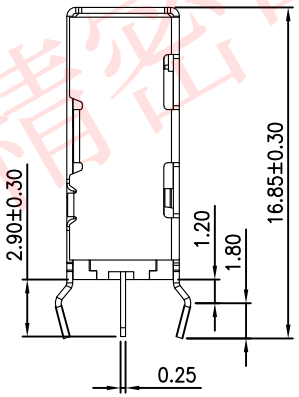

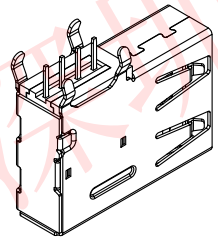

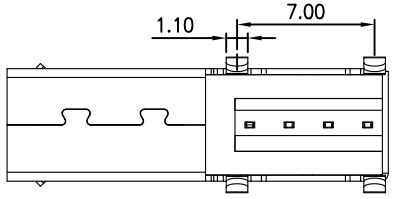

P/N: 103015-120101

- 1:DIP
- PACKAGING:2.TRAY
- SERIES NUMBER:01~99
- CONTACT AREA PLATED
  - 1: Au G/F
  - 8: Au 30U"
- SOLDER AREA PLATED
  - 0: SN

TOLERANCE		NAME(INTENDED USE) CUSTOMER DRAWING	XSUA® 深圳市新升跃精密电子有限公司 SHENZHEN XINSHENGYUE PRECISION ELECTRONICS CO., LTD
X.X ±0.38	X.° ±10°	PART NO.	TITLE: USB AF 侧立式插板K=6.9直边
.XX ±0.25	.X° ± 8°		
.XXX ±0.02	.XX° ± 5°		
UNITS	mm	DESIGN: Arvin	DRAWG NO. C-103015
MATERILA		CHED:	SCALE 1:1 / SHEET 1/2 / REV. A
FINISH		APPD:	

深圳市新升跃精密电子有限公司

This document is the property of Xinshengyue Corporation and is delivered on the express condition that it is not to be disclosed, reproduced or used, in whole or in part, for manufacture or sale by anyone other than Xinshengyue Corporation without its prior concert&that no right is granted to disclose or to use any information in this document.

REV.	ECN NO.	DESCRIPTION	DATE	DESIGN
A	ECN NO.	NEW DRAWING	2025.07.16	Janus

RoHS COMPLIANT

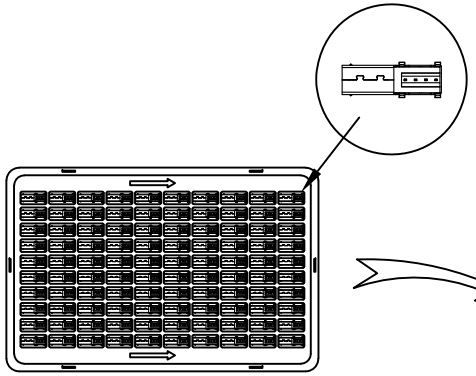

100PCS/盘，四周打订

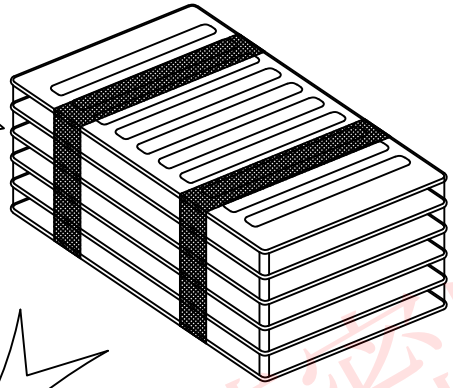

15盘/捆，用PE膜捆紧，2捆/箱

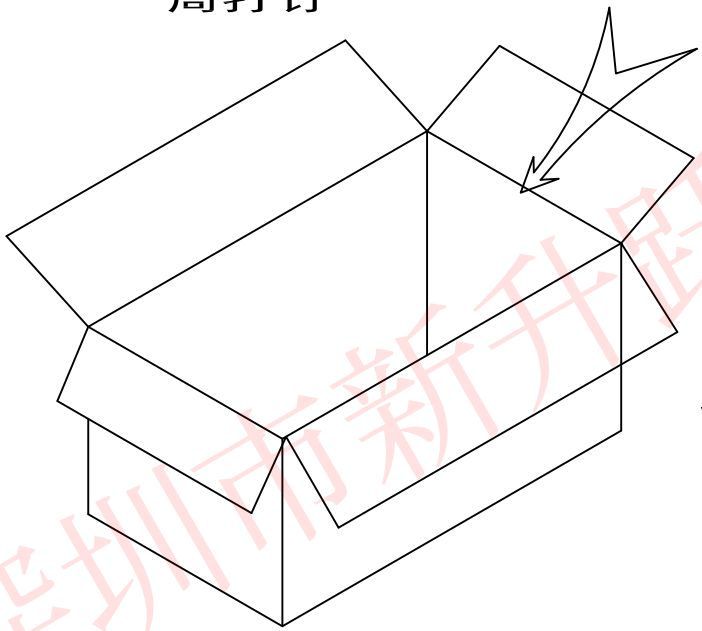

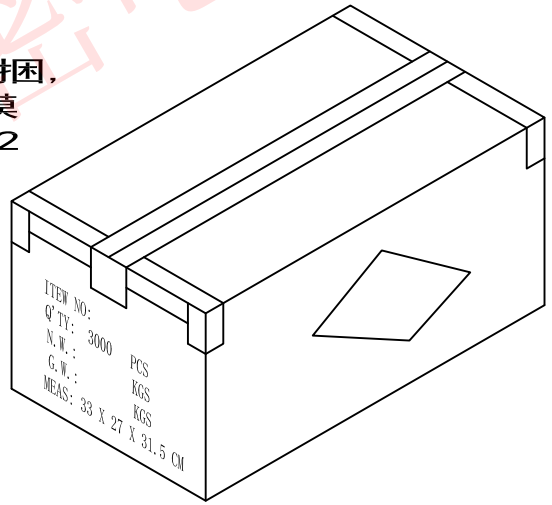

封箱

包装注意事项：
1. 每15叠真空盘需用PE膜捆扎；
2. 每箱需放入适量干燥剂；
3. 产品标签按要求；
4. 尾数箱请将内部多余的空间用干燥物填充满，并在产品标签上标明尾数箱；

100	3000
PCS/真空盒	PCS/外箱

TOLERANCE		NAME(INTENDED USE) CUSTOMER DRAWING	XSUA® 深圳市新升跃精密电子有限公司 SHENZHEN XINSHENGYUE PRECISION ELECTRONICS CO., LTD
X.X ±0.38	X.° ±10°	PART NO.	TITLE: USB AF 侧立式插板K=6.9直边
.XX ±0.25	.X° ± 8°		
.XXX ±0.02	.XX° ± 5°	DESIGN: Arvin	DRAWG NO. C-103015
UNITS	mm		
MATERILA		CHED:	SCALE 1:1 SHEET 2/2 REV. A
FINISH		APPD:	

深圳市新升跃精密电子有限公司