This document is the property of Xinshengyue Corporation and is delivered on the express condition that it is not to be disclosed, reproduced or used, in whole or in part, for manufacture or sale by anyone other than Xinshengyue Corporation without its prior concert&that no right is granted to disclose or to use any information in this document.

REV.	ECN NO.	DESCRIPTION	DATE	DESIGN
A	ECN NO.	NEW DRAWING	2026.05.08	Janus

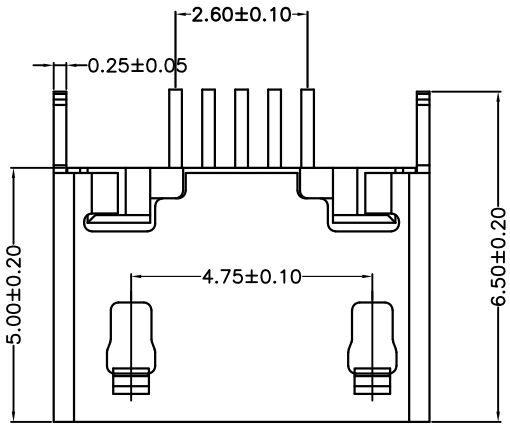

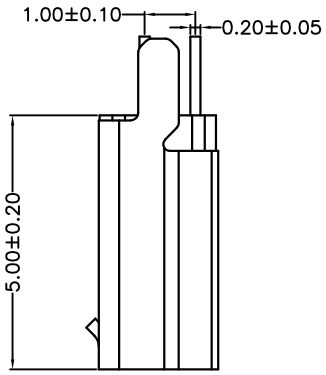

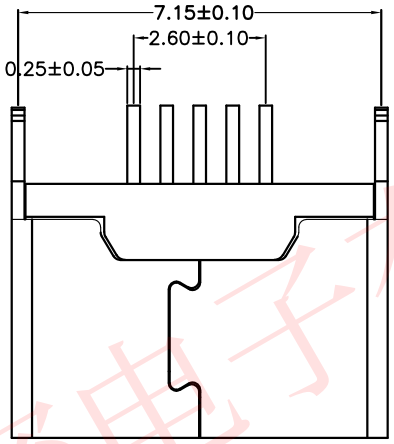

备注:
1.产品规格:
1.1 插入力:35N Max.
1.2 拔出力:10N MIN.INITIAL 8-20N AFTER 3000 CYCLES
1.3 额定电流:1.0A
1.4 额定电压:30V
1.5 耐久性:3000 CYCLES MIN.
1.6 耐电压:100V AC MIN.
1.7 接触阻抗:30mΩ MAX.INITIAL;40mΩ MAX AFTER 3000 CYCLES
1.8 绝缘电阻:100MΩ MIN
1.9 工作温度:-30° TO +80°
2.材质:
2.1 胶芯:UL94V-0 LCP Black ROHS
2.2 端子:C5191 镀金G/F μ″
2.3 外壳:SUS201 镀雾锡30U″
3.所用材质须合符RoHS要求

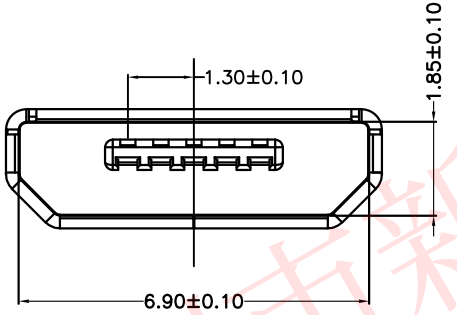

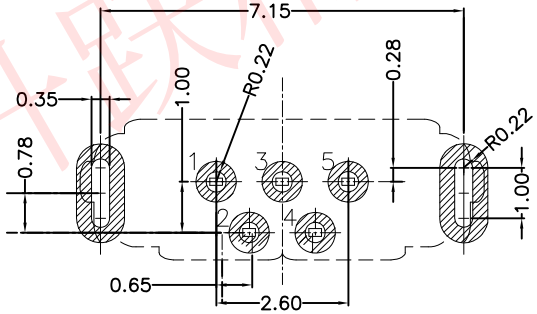

RECOMMEDED P.C.B LAYOUT

P/N: 103054-111101

1:DIP

PACKAGING:1.REEL

SERIES NUMBER:01~99

CONTACT AREA PLATED
1: Au G/F

SOLDER AREA PLATED
1: Au G/F

TOLERANCE		NAME(INTENDED USE) CUSTOMER DRAWING	XSUA® 深圳市新升跃精密电子有限公司 SHENZHEN XINSHENGYUE PRECISION ELECTRONICS CO., LTD
X.X ±0.38	X.° ±10°	PART NO.	TITLE: MICRO 5P F B TYPE 180插板无卷边
.XX ±0.25	.X° ± 8°		
.XXX ±0.10	.XX° ± 5°	DESIGN: Arvin	DRAWG NO. C-103054
UNITS	mm		SCALE 1:1 / SHEET 1/1 / REV. A
MATERILA		CHED:	
FINISH		APPD:	

深圳市新升跃精密电子有限公司