650V N-Channel Planar MOSFET

DESCRIPTION

PMS65N07X is a high voltage MOSFET based on advanced planar stripe DMOS technology. This advanced MOSFET has optimized on-state resistance, and also provides superior switching performance and higher avalanche energy strength. This device family is suitable for high efficiency switch mode power supplies.

FEATURE

- R_{DSON}=1.2Ω @Vgs=10V,Id=3.5A
- Low gate Charge(typical 25.9nC)
- Low Crss (typical 3pF)
- Fast switching capability
- 100% avalanche tested
- Improved dv/dt capability
- Halogen free and RoHS compliant
- Main parameters：

V_{DS}	650V
Rdson	1.2Ω
Qg,typ	25.9nC
I_D	7A
$I_{D,\ pulse}$	28A

APPLICATIONS

- Switch Mode Power Supply
- Uninterruptible Power Supply (UPS)
- TV Power
- Adapter/Charger

PIN ASSIGNMENTS

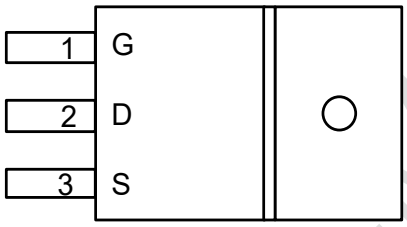

TO220F PKG

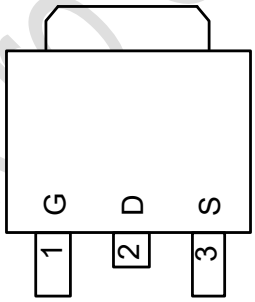

TO-252 PKG

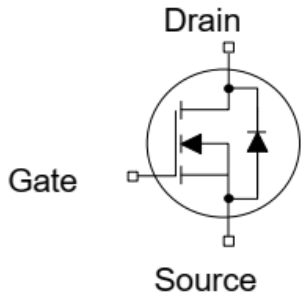

Schematic diagram

PIN DESCRIPTION

PIN NUMBER	PIN NAME	DESCRIPTION
1	G	Gate
2	D	Drain
3	S	Source

Power-Micro Confidential

POWER-MICRO'S PRODUCTS ARE NOT AUTHORIZED FOR USE AS CRITICAL COMPONENTS IN LIFE SUPPORT DEVICES OR SYSTEMS, WITHOUT THE EXPRESS PRIOR WRITTEN APPROVAL OF THE CHIEF EXECUTIVE OFFICER GENERAL COUNSEL OF POWER-MICRO SEMICONDUCTOR.

ORDERING INFORMATIONS

PART NUMBER	PACKAGE	CASING
PMS65N07F	TO-220F	50 Pcs/Tube
PMS65N07D	TO-252	2,500 pcs/ Tape & Reel

ABSOLUTE MAXIMUM RATINGS

(All specification below at Ta=25℃; unless otherwise specified.)

Symbol	Parameter		Value	Unit
V_{DSS}	Drain-source voltage (V_{GS}=0V)		650	V
I_D	Continuous drain current(1)	Tc = 25℃	7	A
I_D	Continuous drain current(1)	Tc = 100℃	4.2	A
I_{DM}	Pulsed drain current (2)		28	A
V_{GSS}	Gate-source voltage		±30	V
E_{AS}	Single pulse avalanche energy(3)		490	mJ
dv/dt	Reverse diode dv/dt(4)		5	V/nS
P_D	Power dissipation (Tc = 25℃) (TO-220F)		41	W
	Power dissipation (Tc = 25℃) (TO-252)		104	W
$R_{\theta JC}$	Thermal resistance, junction-case Ambient(TO-220F)		3	° C/W
	Thermal resistance, junction-case Ambient(TO-252)		1.2	° C/W
$R_{\theta JA}$	Thermal resistance, junction-ambient(TO-220F)		80	° C/W
	Thermal resistance, junction-ambient(TO-252)		62	° C/W
T_J	Junction temperature		-55 ~ +150	° C
T_{STG}	Storage temperature		-55 ~ +150	° C

NOTES:

(1) Limited by maximum junction temperature.
(2) Repetitive Rating: Pulse width limited by maximum junction temperature.
(3) L=20mH, I_D=7A,R_G=25Ω, VDD=80V, Start T_J=25℃.
(4) I_{SD}≤7A, di/dt≤100A/μs, VDD≤BV_{DSS}, Start T_J=25℃.

Power-Micro Confidential

ELECTRICAL CHARACTERISTICS (5)(6)(7)(8)

(All specification below at Ta=25℃; unless otherwise specified.)

Symbol	Parameter	Test Condition	Min	Type	Max	Unit
Static Characteristics						
BV_{DSS}	Drain-source breakdown voltage	V_{GS}=0V, I_D=250μA	650			V
I_{DSS}	Zero gate voltage drain current	V_{DS}=650V,V_{GS}=0V, T_J=25ºC			1	uA
		V_{DS}=650V,V_{GS}=0V, T_J=150ºC			100	uA
I_{GSS}	Gate-body leakage current	V_{GS}=±30V			±100	nA
$V_{(GS)th}$	Gate threshold voltage	V_{DS}= V_{GS}, I_D=250uA	2		4	V
$R_{DS(on)}$	Static drain-source on-resistance	V_{GS}=10V,I_D=3.5A		1.2	1.4	Ω
R_G	Gate Resistance	f=1.0MHz open drain		1.7		Ω
Dynamic Characteristics						
C_{ISS}	Input capacitance	V_{GS}=0V, V_{DS}=25V f=1MHz		1191		pF
C_{OSS}	Output capacitance			86		pF
C_{RSS}	Reverse transfer capacitance			3		pF
Qgs	Gate to source charge	V_{DD}=520V,I_D=7A, V_{GS}=10V		7.1		nC
Qgd	Gate to drain charge			8.0		nC
Qg	Gate charge total			25.9		nC
$V_{Plateau}$	Gate Plateau Voltage			4.9		V
$T_{d(on)}$	Turn-on delay time	V_{DD}=325V,I_D=7A, R_G=25Ω		20		nS
T_r	Turn-on rise time			50		nS
$T_{d(off)}$	Turn-off delay time			90		nS
T_f	Turn-off fall time			55		nS
Reverse Diode Characteristics						
V_{SD}	Diode forward voltage	V_{GS}=0V,I_{SD}=7A			1.2	V
Trr	Reverse recovery time	V_R=400V, I_F=7A di$_F$/dt=100A/μs		351		nS
Qrr	Reverse recovery charge			3.3		uC

NOTES:

(5) Typical values in electrical characteristics are theoretical values of design, minimum and maximum values are guaranteed by test statistics.
(6) The data is based on the results of PME laboratory tests.
(7) TJ=+25℃ to +150℃.
(8) Pulse width≤380μs; duty cycle≤2%.

Power-Micro Confidential

PACKAGE INFORMATION

TO-220F

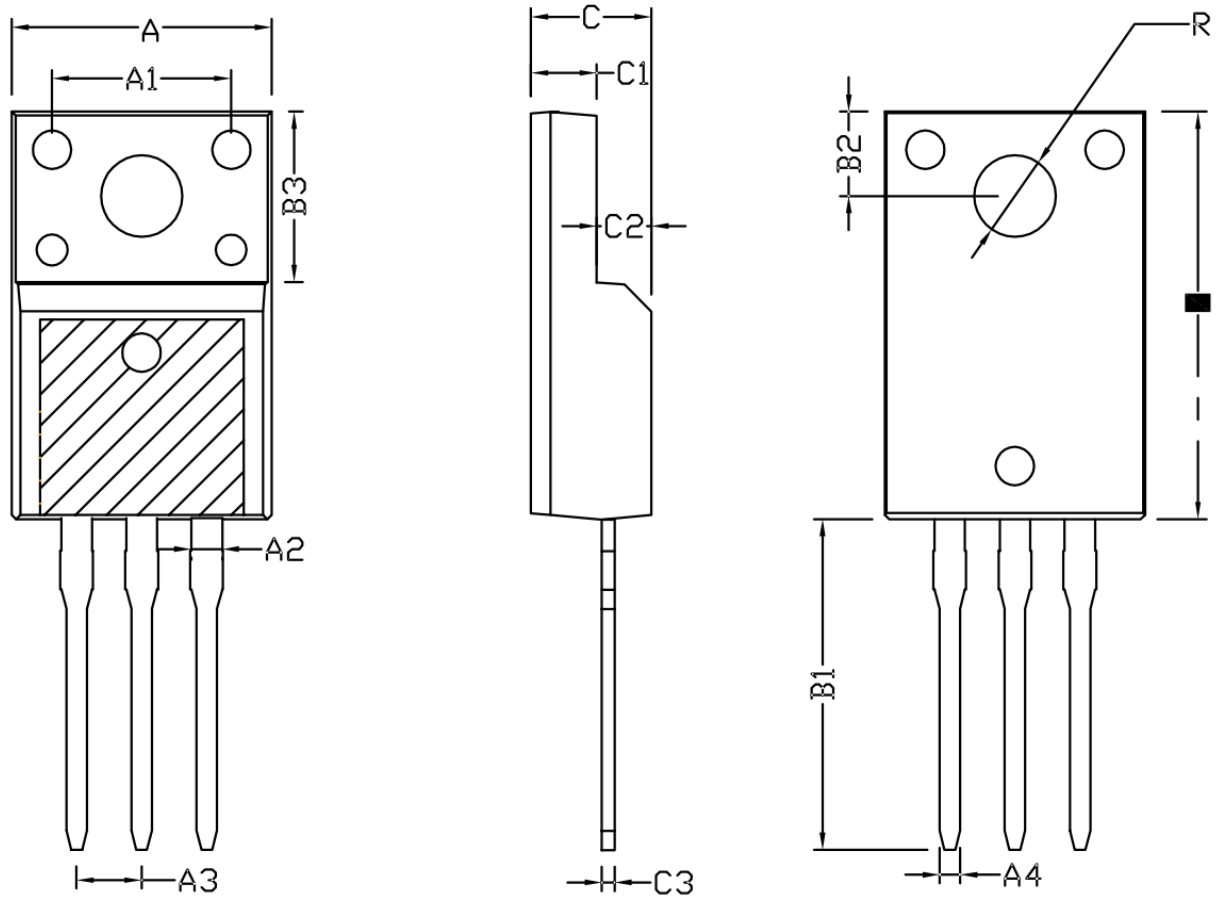

标注	最小	标准	最大	标注	最小	标准	最大	标注	最小	标准	最大
A	9.98	10.08	10.18	B	15.81	15.91	16.01	C	4.62	4.7	4.78
A1	6.5	7.0	7.5	B1	12.86	12.96	13.06	C1	2.5	2.55	2.6
A2	1.20	1.28	1.36	B2	3.0	3.3	3.6	C2	2.1	2.15	2.2
A3		2.54		B3	6.6	6.65	6.7	C3		0.5	
A4	0.7	0.8	0.9	R		3.18					

TO252-3L PACKAGE OUTLINE DIMENSIONS

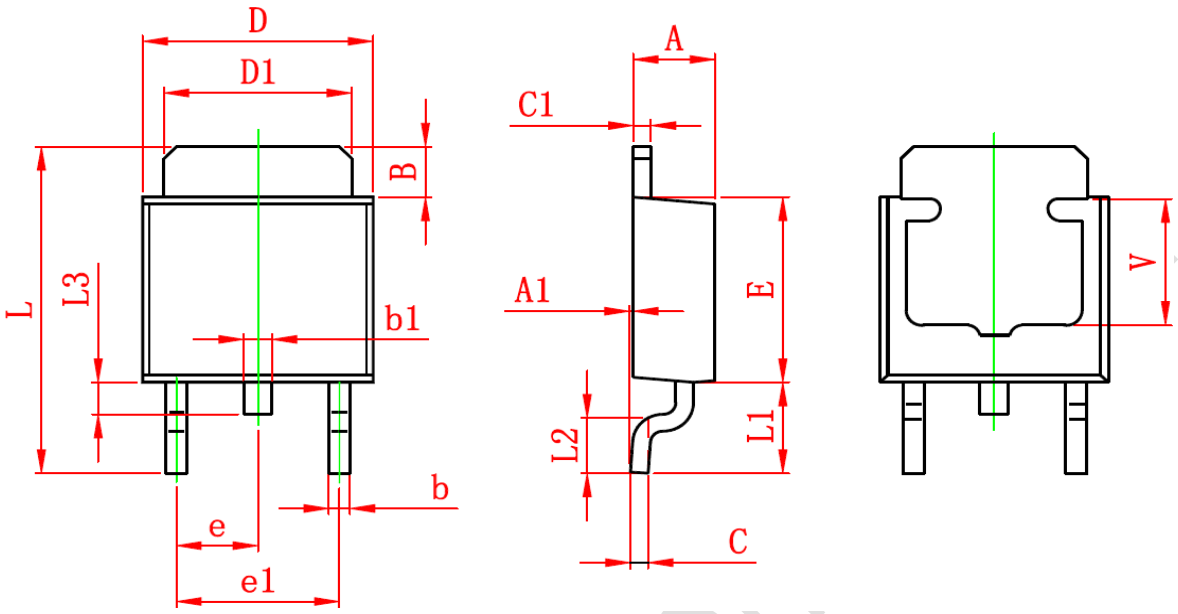

Symbol	Dimensions In Millimeters		Dimensions In Inches	
	Min	Max	Min	Max
A	2.200	2.400	0.087	0.094
A1	0.000	0.100	0.000	0.004
B	0.900	1.250	0.035	0.049
b	0.500	0.840	0.020	0.034
c	0.430	0.570	0.017	0.023
D	6.350	6.700	0.250	0.264
D1	5.200	5.400	0.205	0.213
E	5.400	6.200	0.213	0.244
e	2.300TYP		0.091TYP	
e1	4.500	4.700	0.177	0.185
L	9.500	10.300	0.374	0.406
L2	1.400	1.600	0.055	0.063
L3	0.600	1.000	0.024	0.039
V	3.800REF		0.150REF	

Power-Micro Co

VERSION INFORMATION

Modify	Version	Change Note
2026-03-15	V1.0	First Version
2026-06-18	V1.1	Refined Various Details

P.S.:

(1) Power-Micro Semi reserves the final right to interpret the terms and conditions of this content.

(2) Purchasers must request the latest version datasheet from Power-Micro Semi before placing orders.

Power-Micro Confidential