BORN SEMICONDUCTOR

BESD3V3B15G

ESD Protection Diode

Features

- 110Watts peak pulse power (tp = 8/20μs)
- Bidirectional configurations
- Solid-state silicon-avalanche technology
- Low clamping Voltage
- Low leakage current
- IEC 61000-4-2 ±30kV contact ; ±30kV air
- IEC 61000-4-4 (EFT) 40A (5/50ns)
- IEC 61000-4-5 (Lightning) 10A (8/20μs)

Package

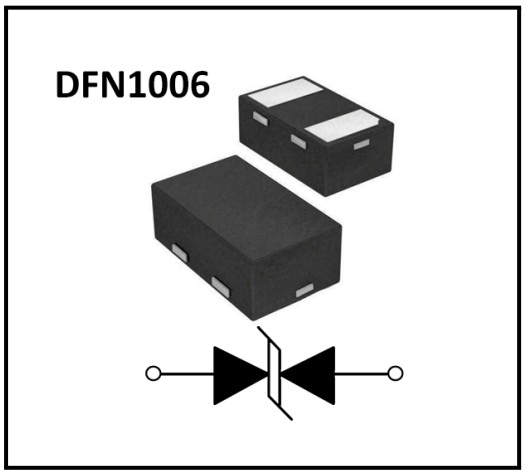

Applications

- Cell Phone Handsets and Accessories
- Microprocessor based equipment
- Personal Digital Assistants (PDA's)
- Notebooks, Desktops, and Servers
- Portable Instrumentation

Mechanical Characteristics

- DFN1006 package
- Molding compound flammability rating: UL 94V-0
- Packaging: Tape and Reel
- RoHS/WEEE Compliant

Marking

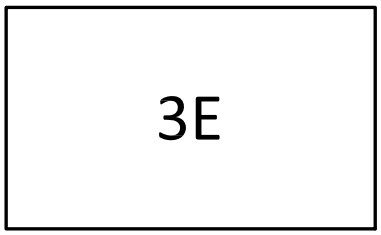

Ordering information

Order code	Package	Base qty	Delivery mode
BESD3V3B15G	DFN1006	10k	Tape and reel

BORN SEMICONDUCTOR , INC. ALL RIGHT RESERVED

Specifications are subject to change without notice.
Please refer to http://*www.born-tw.com* for current information.

Revision: 2022-Jan-1-A

BESD3V3B15G

ESD Protection Diode

Electrical Parameters (T_A = 25°C unless otherwise noted)

Symbol	Parameter
I_{PP}	Maximum Reverse Peak Pulse Current
V_C	Clamping Voltage @ I_{PP}
V_{RWM}	Peak Reverse Working Voltage
I_R	Reverse Leakage Current @ V_{RWM}
V_{BR}	Breakdown Voltage @ I_T
I_T	Test Current

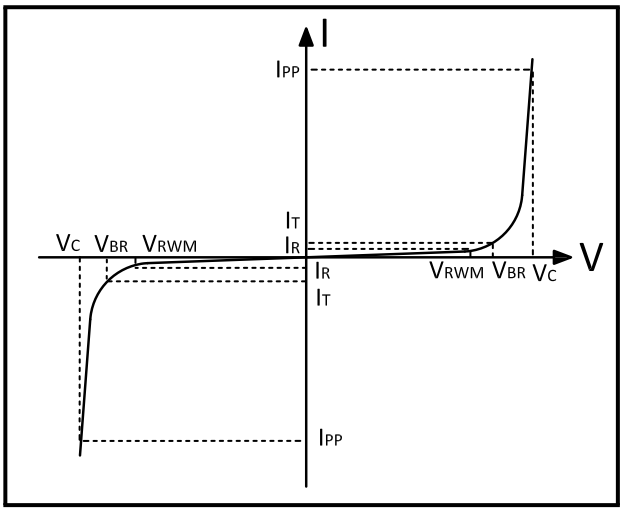

Note:8/20us pulse Waveform.

Absolute Maximum Rating

Rating	Symber	Value	Units
Peak Pulse Power (tp =8/20μs)	P_{PP}	110	Watts
Peak Pulse Current (tp =8/20μs)	I_{PP}	10	A
ESD per IEC 61000-4-2 (Air) ESD per IEC 61000-4-2 (Contact)	V_{ESD}	30 30	KV
Lead Soldering Temperature	T_L	260(10seconds)	°C
Junction Temperature	T_J	-55 to + 150	°C
Storage Temperature	T_{stg}	-55 to + 150	°C

Electrical Characteristics

Parameter	Symber	Conditions	Min	Typical	Max	Units
Reverse Stand-Off Voltage	V_{RWM}	–	–	–	3.3	V
Reverse Breakdown Voltage	V_{BR}	I_T=1mA	4.0	5.0	6.5	V
Reverse Leakage Current	I_R	V_{RWM}=3.3V,T=25°C	–	0.1	0.2	uA
Peak Pulse Current	I_{PP}	tp =8/20us	–	–	10	A
Clamping Voltage	V_{CL}	I_{PP}=16A, tp =100ns	–	8	–	V
Clamping Voltage	V_C	I_{PP}=5 A, tp =8/20us	–	6	8	V
Clamping Voltage	V_C	I_{PP}=10A, tp =8/20us	–	9	11	V
Dynamic resistance	R_{DYN}	–	–	0.2	–	Ω
Junction Capacitance	C_j	V_R=0V,f=1MHZ	–	18	25	pF

BORN SEMICONDUCTOR , INC. ALL RIGHT RESERVED

Specifications are subject to change without notice.
Please refer to http://*www.born-tw.com* for current information.

BESD3V3B15G

ESD Protection Diode

Typical Characteristics

Figure 1: Peak Pulse Power vs. Pulse Time

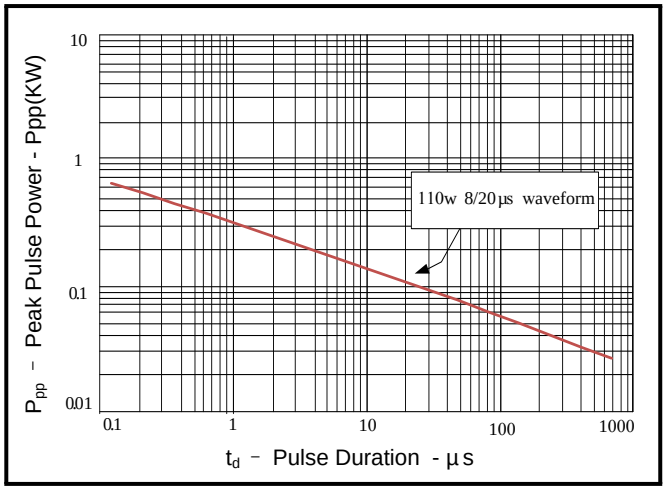

Figure 2: Power Derating Curve

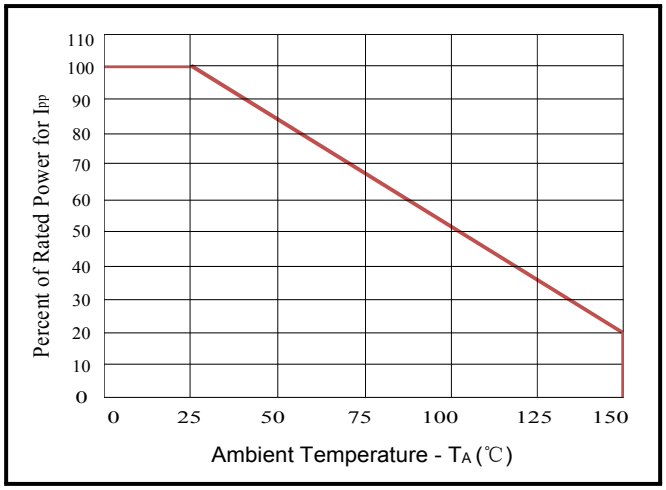

Figure 3: Pulse Waveform

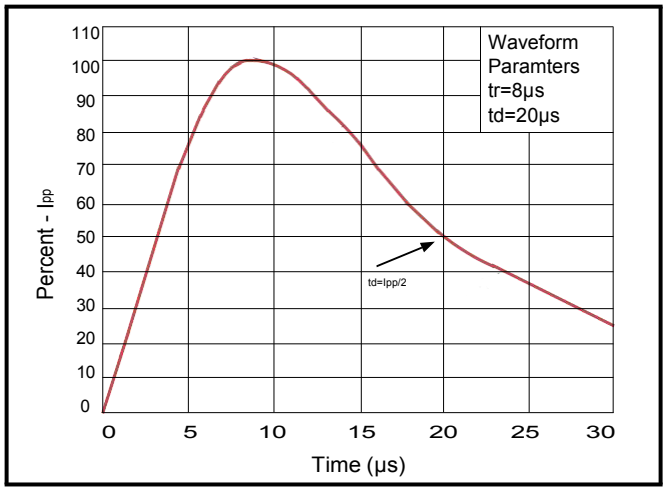

Figure 4: Clamping Voltage vs. I_{PP}

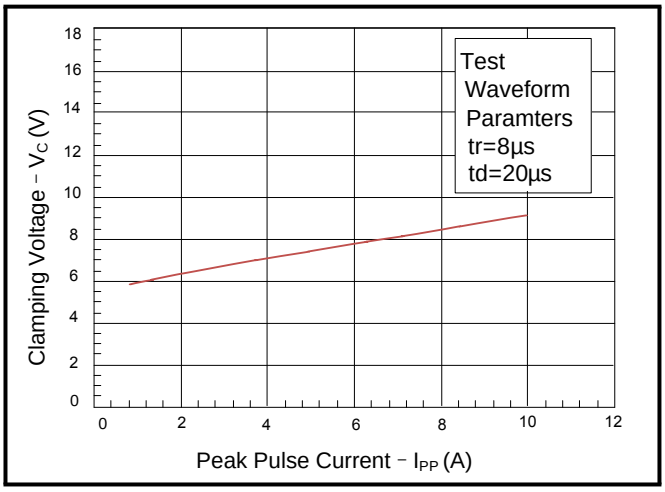

BORN SEMICONDUCTOR , INC. ALL RIGHT RESERVED

Specifications are subject to change without notice.
Please refer to http://www.born-tw.com for current information.

BESD3V3B15G

ESD Protection Diode

Outline Drawing – DFN1006

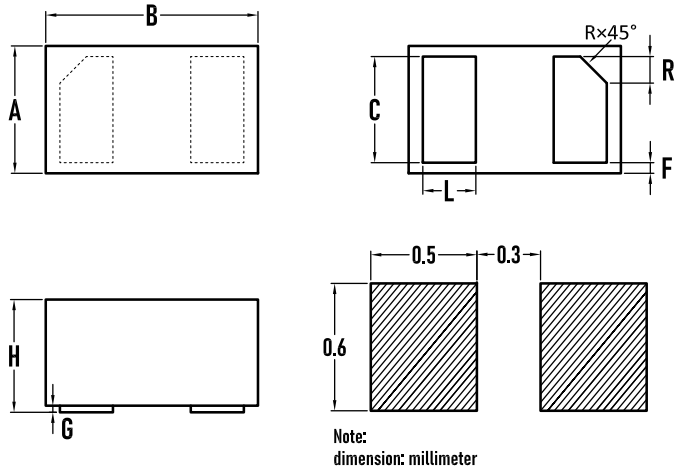

SYMBOL	MILLIMETER		
	MIN.	Typ.	MAX.
A	0.55	0.60	0.65
B	0.95	1.00	1.05
C	0.45	0.50	0.55
L	0.20	0.25	0.30
F	0.05REF		
G	0.00	0.02	0.05
H	0.45	0.50	0.55
R	0.07	0.12	0.17

Packaging Tape - DFN1006

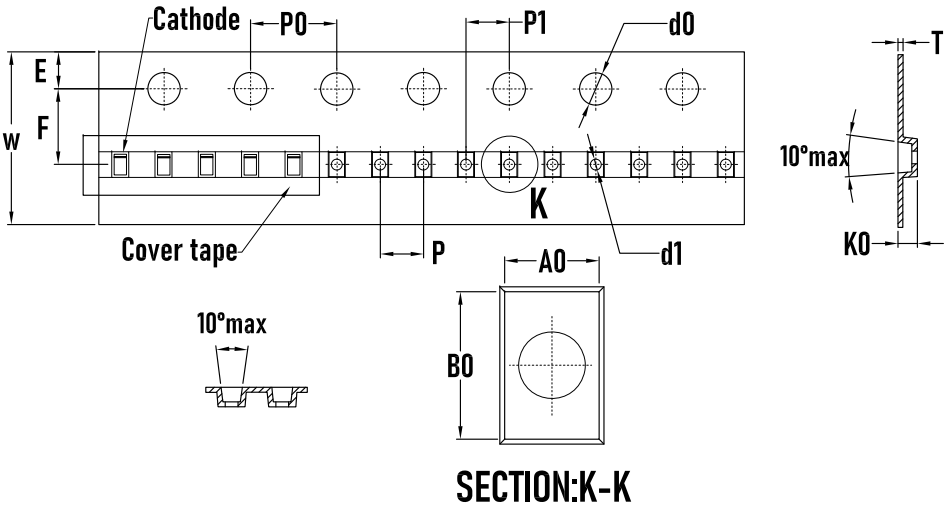

SYMBOL	MILLIMETER
A0	0.71±0.05
B0	1.11±0.05
d0	$1.5^{+0.1}_{-0}$
d1	0.50±0.05
E	1.75±0.10
F	3.50±0.05
K0	0.56±0.05
P	2.00±0.05
P0	4.00±0.10
P1	2.00±0.05
W	$8.00^{+0.03}_{-0.01}$
T	0.2±0.015

Packaging Reel

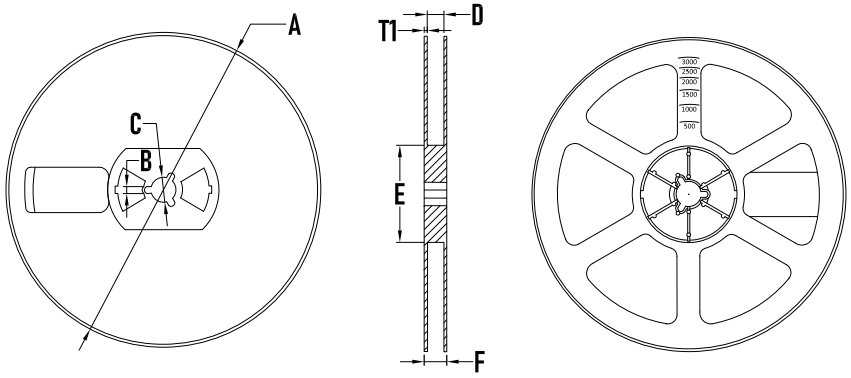

SYMBOL	MILLIMETER
A	178±1
B	3.5±0.2
C	14.3±0.2
D	9.8^{+2}_{-1}
E	54.5±0.5
F	12.4±0.2
T1	1.0±0.2
Quantity	10000PCS

BORN SEMICONDUCTOR , INC. ALL RIGHT RESERVED

Specifications are subject to change without notice.
Please refer to http://*www.born-tw.com* for current information.

Revision: 2022-Jan-1-A