BORN SEMICONDUCTOR

BPESD0603-240

ESD Protection Diode

Features

- Deal ESD protection for high frequency, low voltage ap-plications.
- Exceeds testing requirements outlined in IEC 61000-4-2
- Ultra low capacitance (0.2pF typ.)
- Very low leakage current
- Fast response time
- Bi-directional

Package

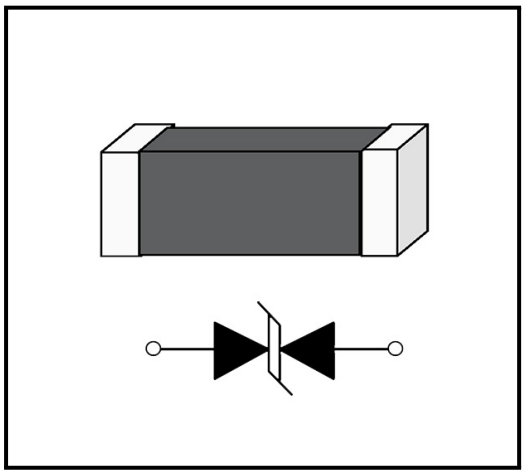

Applications

- High Speed Data Ports (USB 2.0, IEEE 1394)
- Computers & Peripherals (Cell phone, PDA, HDTV, DVD players)

Mechanical Data

- Surface mount
- RoHS Compliant

Ordering information

Order code	Package	Base qty	Delivery mode
BPESD0603-240	0603	5k	Tape and reel

Absolute Maximum Rating

Rating	Symbol	Value	Units
ESD per IEC 61000-4-2 (Contact) ESD per IEC 61000-4-2 (Air)	V_{ESD}	±8 ±15	KV
Response time	T_{RISE}	<0.5	ns
Lead content	–	<1000	ppm
Withstanding ESD capability	IEC61000-4-2	Level 4	–
Operating Ambient Temperature	T_A	-50 to + 85	°C
Storage Temperature	T_{stg}	-50 to + 125	°C

BORN SEMICONDUCTOR , INC. ALL RIGHT RESERVED

Specifications are subject to change without notice.
Please refer to http://*www.born-tw.com* for current information.

BPESD0603-240

ESD Protection Diode

Electrical Characteristics

Part NO.	Working Voltage	Typical ESD Trigger Voltage	Typical ESD Clamping Voltage at 30ns	Leakage Current (at Initial State)	Leakage Current (after ESD Test)	Cap. Value at 1MHz	
Symbol	$V_{DC(max.)}$	$V_{trigger(typ.)}$	$V_{C(typ.)}$	I_{LDC}	I_{LDCA}	C(pF)	
Unit	V	V	V	μA	μA	Typ.	Max.
BPESD0603-240	24	300	30	<0.05	<10	0.20	0.30

Notes:

1.The clamping voltage was measured by IEC61000-4-2 level 4, direct discharge 8KV.

2.The leakage current was measured at VDC.

3.The components shall be employed within 1 year, in the nitrogen condition.

ESD Wave Form

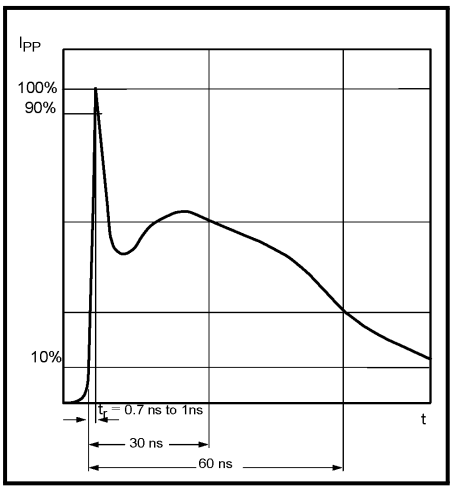

Electrical Characteristics

SEVERITY LEVEL	AIR DIRCHARGE	DIRECT DISCHARGE
1	2KV	2KV
2	4KV	4KV
3	8KV	6KV
4	15KV	8KV

Note:IEC61000-4-2 compliant ESD current pulse waveform.

BORN SEMICONDUCTOR , INC. ALL RIGHT RESERVED

Specifications are subject to change without notice.
Please refer to http://*www.born-tw.com* for current information.

Revision: 2022-Jan-1-A

BPESD0603-240

ESD Protection Diode

Testing Results

Figure 1 : with ESD protection sample

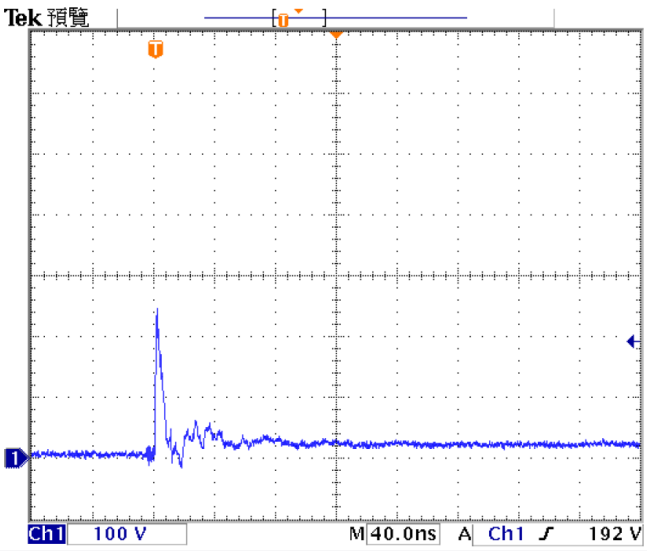

Figure 2 : without ESD protection sample

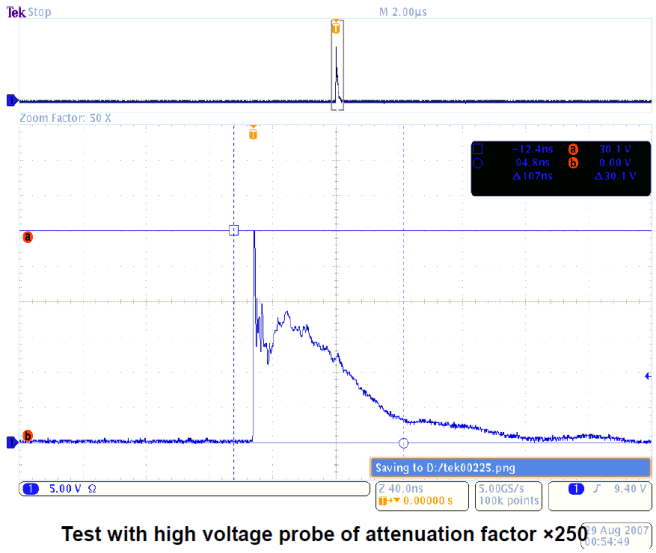

Test with high voltage probe of attenuation factor ×250

BORN SEMICONDUCTOR , INC. ALL RIGHT RESERVED

BPESD0603-240

ESD Protection Diode

Soldering Parameters

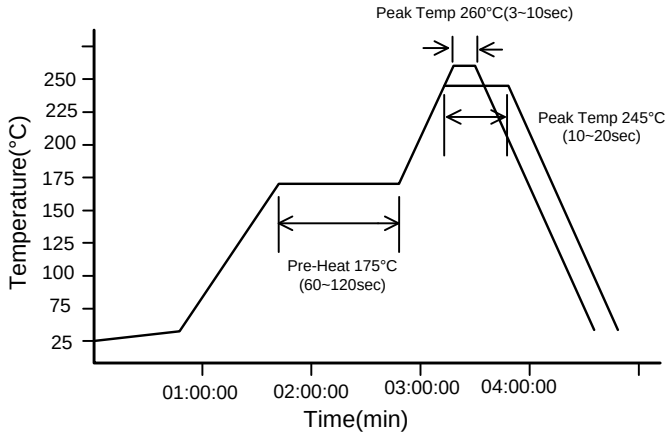

IR reflow Pb free process suggestion profile

(1)The solder recommend is Sn96.5/Ag3.5 and thickness recommend as shown in table 5.3.

(2)Ramp-up rate (217°C to peak) + 3°C /second max.

(3)Temp. maintain at 175±25°C 180 seconds max.

(4)Temp. maintain above 217°C 60～150 seconds.

(5) Peak temperature range 245 +20/-10°C within 5°C of actually peak temperature (tp) 10~20 seconds.

(6) Ramp down rate -6°C/second max.

Environment Reliability Test

Characteristic	Test Method and Description			
High Temperature Storage	The specimen shall be subjected to 125±2°C for 1000±2 hours without load and then stored at room temperature and normal humidity for one or two hours. The change of varistor voltage shall be within 10%.			
Temperature Cycle	The temperature cycle of specified temperature shall be repeated five times and then stored at room temperature and normal humidity for one or two hours. The change of varistor voltage shall be within 10% and mechanical damage shall be examined.	Step	Temperature	Period
		1	-40±3°C	30±3min
		2	room temperature	1 hour
		3	125±3°C	30±3min
		4	room temperature	1 hour
High Temperature Load	After being continuously applied the maximum allowable voltage at 85±2°C for 1000±2 hours, the specimen shall be stored at room temperature and normal humidity for one or two hours. The change of varistor voltage shall be within 10%.			
Damp Heat Load/Humidity Load	The specimen should be subjected to 40±2°C and 90～95% RH, the maximum allowable voltage applied for 1000±2 hours and then stored at room temperature and normal humidity for one or two hours. The change of varistor voltage shall be within 10%.			
Low Temperature Storage	The specimen should be subjected to -40±2°C for 1000±2 hours without load and then stored at room temperature and normal humidity for one or two hours. The change of varistor voltage shall be within 10%.			

BORN SEMICONDUCTOR , INC. ALL RIGHT RESERVED

Specifications are subject to change without notice.
Please refer to http://*www.born-tw.com* for current information.

BPESD0603-240

ESD Protection Diode

Outline Drawing

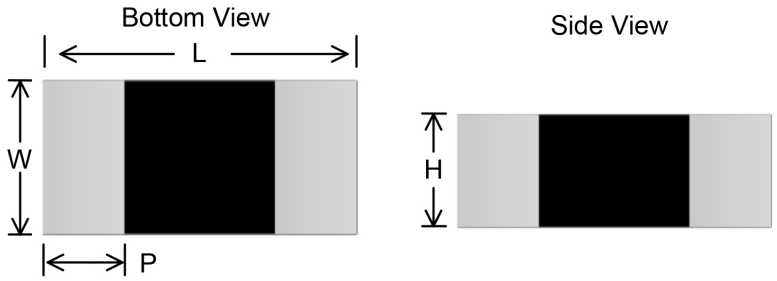

SYMBOL	MILLIMETERS
	0603
L	1.60±0.10
W	0.80±0.10
P	0.30±0.10
H	0.90(Max.)

Packaging Tape

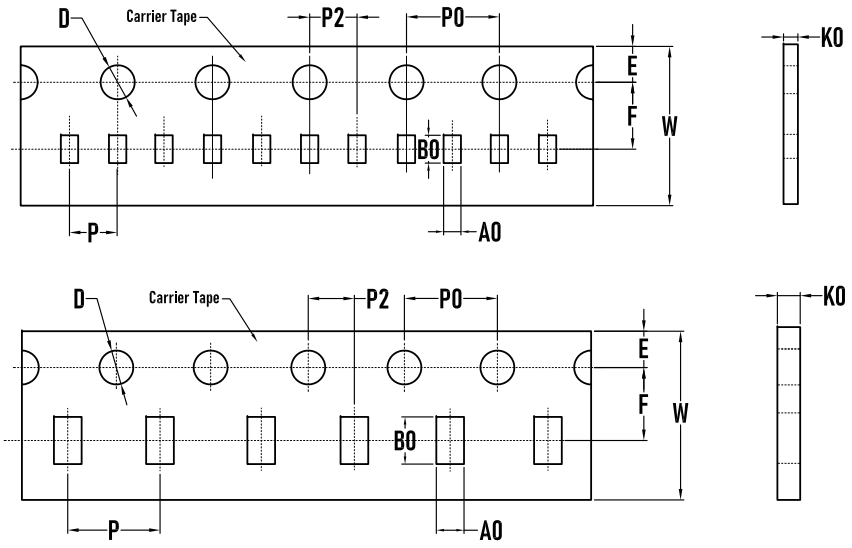

SYMBOL	MILLIMETER	
	0402	0603
A0	0.80±0.05	1.00±0.05
B0	1.20±0.05	1.80±0.05
K0	0.65±0.05	0.75±0.05
D	$1.50^{+0.1}_{-0.05}$	$1.50^{+0.1}_{-0.05}$
P	2.00±0.10	4.00±0.10
P2	2.00±0.10	2.00±0.10
P0	4.00±0.10	4.00±0.10
W	8.00±0.10	8.00±0.10
E	1.75±0.10	1.75±0.10
F	3.50±0.05	3.50±0.05

Packaging Reel

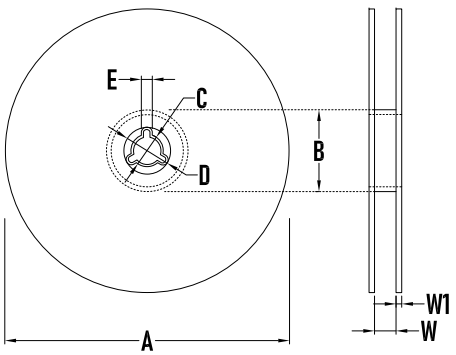

SYMBOL	MILLIMETER	
	0402	0603
A	178±1	178±1
B	60±0.5	60±0.5
C	13.0±0.2	13.0±0.2
D	21±0.2	21±0.2
E	2.0±0.5	2.0±0.5
W	9.0±0.5	9.0±0.5
W1	1.5±0.1	1.5±0.1
Quantity	10000PCS	5000PCS

BORN SEMICONDUCTOR , INC. ALL RIGHT RESERVED

Specifications are subject to change without notice.
Please refer to http://*www.born-tw.com* for current information.

Revision: 2022-Jan-1-A