1. Features

- Ultra-Low capacitance:0.05pF(typ.)
- Low leakage current(<100nA)
- Fast response time(<1ns)
- Bi-directional,single line protection
- IEC 61000-4-2 (ESD Air): 15kV
  IEC 61000-4-2 (ESD Contact): 8kV

2. Pin Description

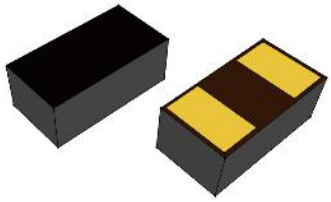

3. Applications

- USB 3.0/3.1
- HDMI 1.3/1.4/2.0
- RF Antenna
- SATA and eSATA Interface

4. Schematic Diagram

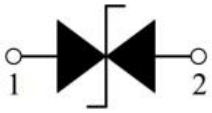

5. Order Information

Type	Package	Size (mm)	Delivery Form	Delivery Quantity
KAU0511P1	0402	1.00x0.52x0.38	7" T&R	10,000

6. Limiting Values(T_A = 25 °C, unless otherwise specified)

Symbol	Parameter	Conditions	Min	Max	Unit
V_{ESD}	Electrostatic Discharge Voltage	IEC 61000-4-2; Contact Discharge	-	8	kV
		IEC 61000-4-2; Air Discharge	-	15	kV
T_A	Operating Temperature Range	-	-40	90	℃
T_{stg}	Storage Temperature Range	-	-55	125	℃

7. Electrical Characteristics(T_A = 25 °C unless otherwise specified)

Symbol	Parameter	Conditions	Min	Typ.	Max	Unit
V_{DC}	Continuous Operating Voltage	-	-	-	5.0	V
V_T	Trigger Voltage	IEC61000-4-2 8kV contact discharge	-	450	-	V
V_C	Clamping Voltage	IEC61000-4-2 8kV contact discharge	-	40	-	V
I_L	Leakage Current	DC 5V shall be applied on component	-	-	100	nA
C_J	Capacitance	Measured at 10MHz	-	0.05	-	pF

8. Typical Characteristics

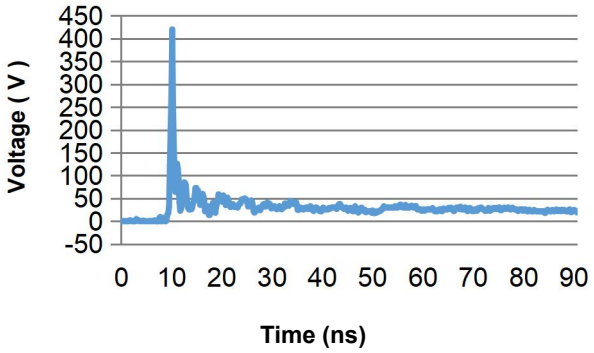

Fig.1 Typical ESD Response
（IEC 61000-4-2, 8kV contact discharge）

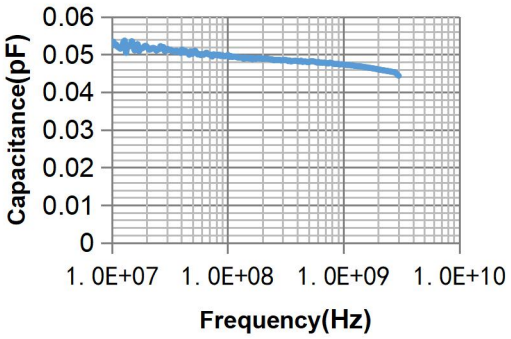

Fig.2 Typical Device Capacitance VS. Frequency

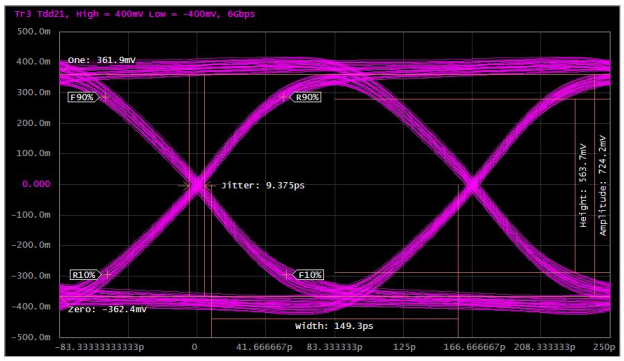

Fig.3 HDMI 2.0 Mask at 6.0 Gbps

9. ESD Protection for Signal Line

The PESD is designed for the protection of one bidirectional data line from ESD damage.

- Place the PESD as close to the input terminal or connector as possible.
- Minimize the path length between the PESD and the protected signal line.
- Use ground planes whenever possible.

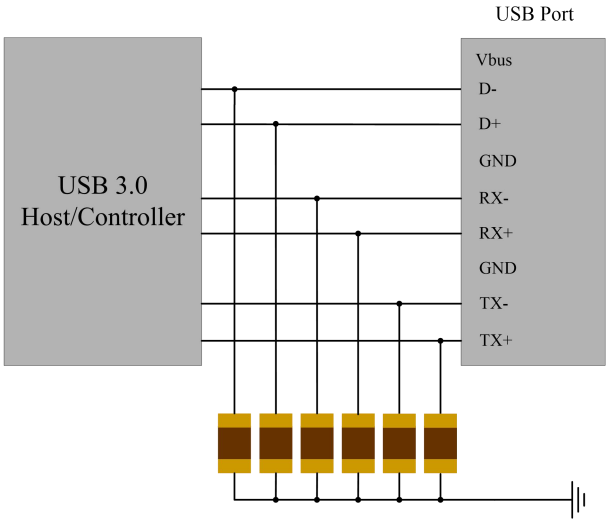

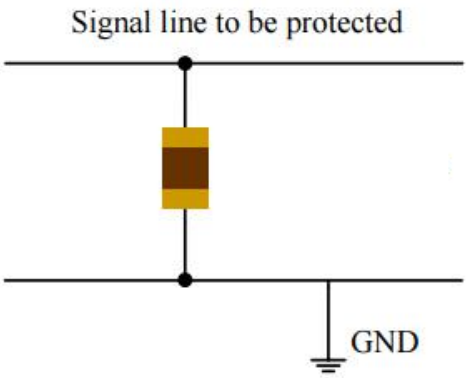

10. Package Dimension

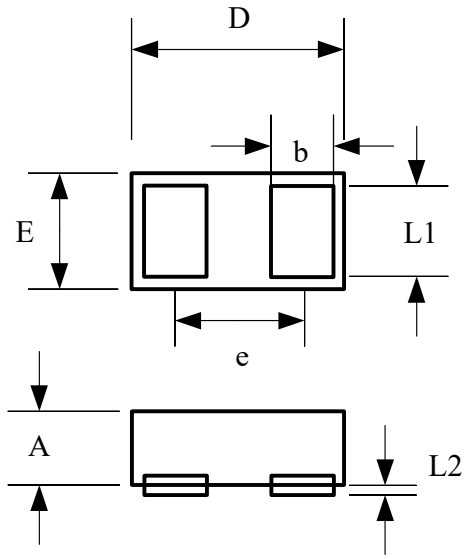

Recommended Solder Pad Footprint

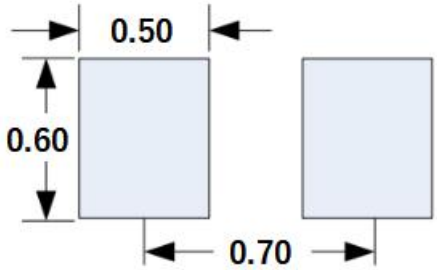

***Sizes in mm**

Notes：

This solder pad layout is for reference purposes only.

Dimension	Unit: Millimeters	
	Min.	Max.
A	0.25	0.45
b	0.20	0.40
D	0.90	1.10
E	0.40	0.60
e	0.65BSC	
L1	0.30	0.50
L2	0.00	0.05

11. Soldering Parameters

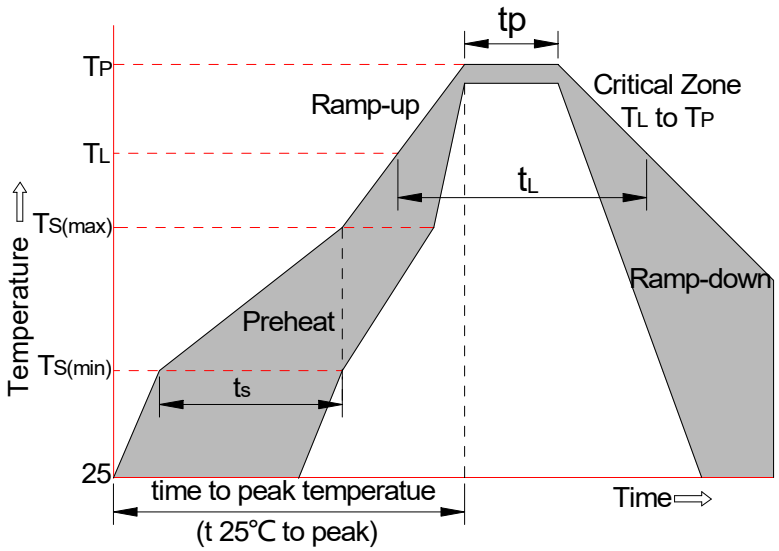

Reflow Condition		Pb-Free Assembly
Pre-heat	-Temperature Min ($T_{s(min)}$)	+150°C
	-Temperature Max($T_{s(max)}$)	+200°C
	-Time (Min to Max) (ts)	60-180 secs.
Average ramp up rate (Liquid us Temp (T_L) to peak)		3°C/sec. Max
$T_{s(max)}$ to T_L - Ramp-up Rate		3°C/sec. Max
Reflow	-Temperature(T_L)(Liquid us)	+217°C
	-Temperature(t_L)	60-150 secs.
Peak Temp (T_p)		+260(+0/-5)°C
Time within 5°C of actual Peak Temp (t_p)		30 secs. Max
Ramp-down Rate		6°C/sec. Max
xTime 25°C to Peak Temp (T_P)		8 min. Max
Do not exceed		+260°C

12. Package Information

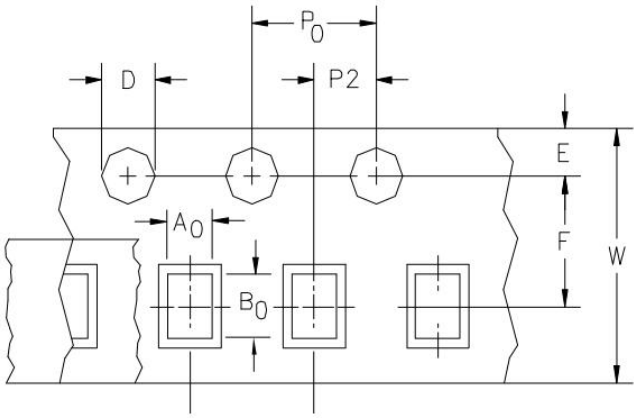

Dimension	Typical	Unit
A0	0.75	mm
B0	1.22	
D	1.55	
P0	4.00	
P1	2.00	
P2	2.00	
E	1.75	
F	3.50	
W	8.00	

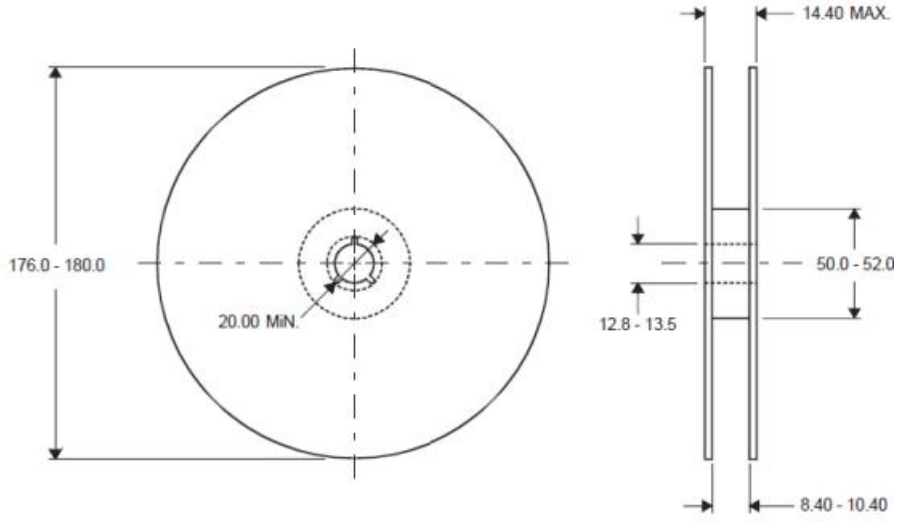

DIMENSIONS ARE: MILLIMETERS