REVISIONS					
REV.	ECN NO.	LOCATION	DESCRIPTION	DATE	DESIGN
A1	N/A		图面升级整理图面	2024.07.20	阿 树
A2	ECN-P-2025112803	Ⓐ2X1	产品尺寸变更,新增C尺寸	2025.11.28	阿 树

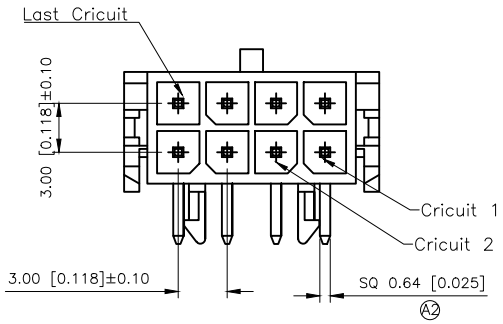

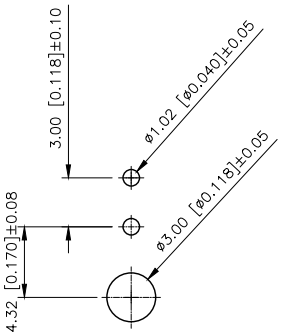

2x01P P.C.B LAYOUT

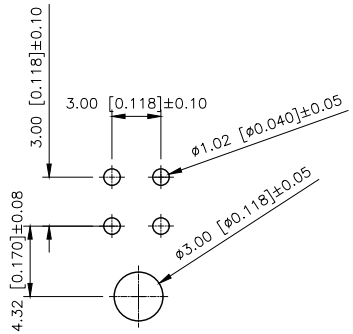

2x02P P.C.B LAYOUT

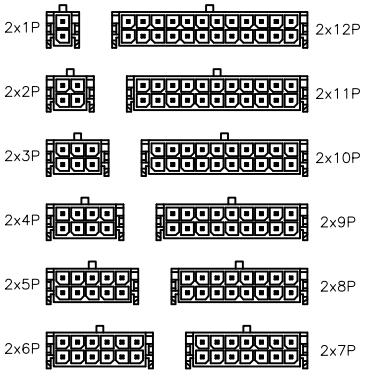

Scale 1:3

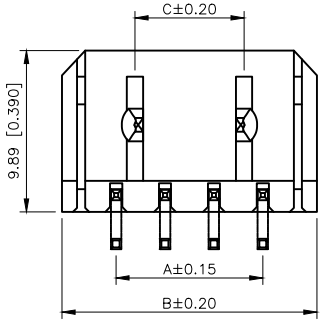

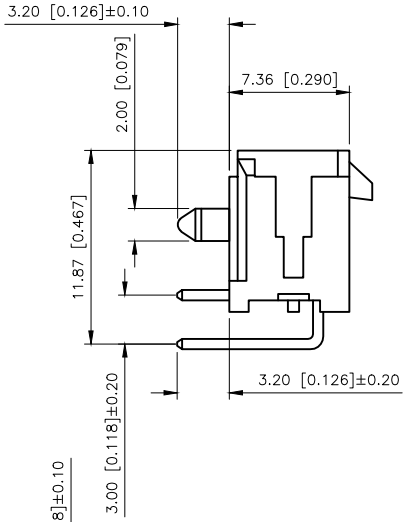

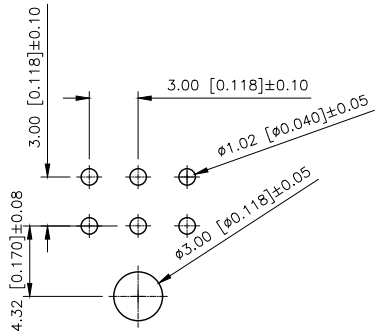

2x03P P.C.B LAYOUT

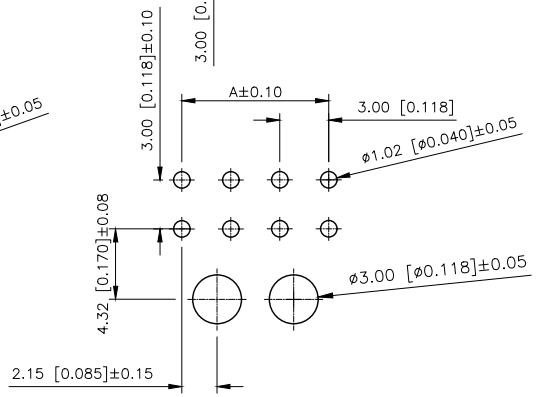

2x04P~2x12P P.C.B LAYOUT

■SPECIFICATIONS
- Voltage rating:250V AC/DC
- Current rating:5A AC/DC
- Withstanding Voltage:1500V AC/minute
- Temperature range:-45°C+125°C
- Insulation resistance:≥1000MΩ
- Contact resistance:≤10mΩ
- After environmental testing: ≤20mΩ

PART NO.:

X3025 W R-2x07-46 SN XX
① ② ③ ④ ⑤ ⑥ ⑦

①Series No
②Category:W-Wafer
③Welding Board Angle:R-Stright 90°
④Row No-Pin No: 2xX-2x01P~2x12P
⑤Material:46-PA46 UL94V-0
⑥Planting:G01:Gold-Contact Gold Flash
SN-Bright tin plating
⑦Color:Blank-natural color

Poles	Dimensions (mm)		
	A	B	C
2x01	---	6.65	2.00
2x02	3.00	9.65	2.00
2x03	6.00	12.65	2.00
2x04	9.00	15.65	6.70
2x05	12.00	18.65	9.70
2x06	15.00	21.65	12.70
2x07	18.00	24.65	15.70
2x08	21.00	27.65	18.70
2x09	24.00	30.65	21.70
2x10	27.00	33.65	24.70
2x11	30.00	36.65	27.70
2x12	33.00	39.65	30.70

X3025WR-2x07-46G01	PA46 UL 94V-0	Brass	Contact Gold	X3025H
X3025WR-2x07-46SN			Tin-Plated	
PART NO	Material	Material(Pin)	Finish(Pin)	Mates With XKB Housing

AuGLAR	±5°
X.	±0.40
X.x	±0.30
X.xx	±0.20
X.xxx	±0.15
UNSPECIFIED TOLERAuCES	

XKB 星创 Connection

DESIGN	阿 树	VIEW:	MODEL TYPE: 3.00 mm Crimp Style Connectors
CHECKED		UNIT: mm/in	PART NO.: X3025WR-2x07-46SN
APPROVED		SIZE: A4	DWG NO.: X-X3025WR-2x07-46SN

XKB INDUSTRIAL PRECISION CO.,LIMITED

SCALE	PAGE	REVISION
N/A	1/1	A2