PDFN3030 Plastic-Encapsulate MOSFETS

Features

- V_{DS}=30V
- I_D=80A
- $R_{DS(on)}$@V_{GS}=10V ＜ 3.2mΩ
- $R_{DS(on)}$@V_{GS}=4.5V ＜ 6mΩ
- Trench Power LV MOSFET technology
- Voltage controlled small signal switch
- Fast Switching Speedze

Drain-source Voltage
30 V
Drain Current
80 Ampere

Applications

- DC-DC Converters
- Power management

PDFN3030

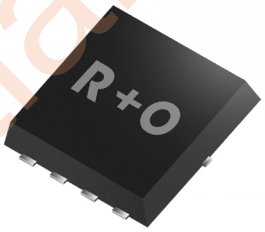

Mechanical Data

- Case: PDFN3030
  Molding compound meets UL 94V-0 flammability rating, RoHS-compliant,halogen-free
- Terminals: Solder plated, solderable per MIL-STD-750,Method 2026

Function Diagram

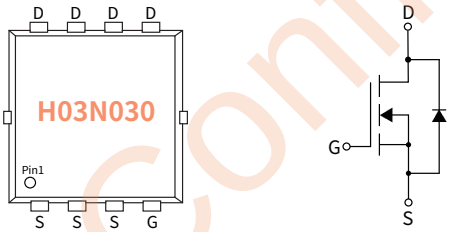

Ordering Information

PACKAGE	PACKAGE CODE	UNIT WEIGHT(g)	REEL(pcs)	BOX(pcs)	CARTON(pcs)	DELIVERY MODE
PDFN3030	R3	0.0218	5000	10000	80000	13''

Maximum Ratings (Ta=25°C Unless otherwise specified)

PARAMETER	SYMBOL	UNIT	VALUE
Drain-source Voltage	V_{DS}	V	30
Gate-source Voltage	V_{GS}	V	±20
Drain Current	I_D	A	80
Pulsed Drain Current (1)	I_{DM}	A	320
Total Power Dissipation	P_D	W	30
Single pulse avalanche energy(2)	EAS	mJ	88
Junction temperature	T_J	°C	-55 ~+150
Storage temperature	T_{stg}	°C	-55 ~+150
Thermal Resistance Junction-to-Case	$R_{\theta JC}$	°C / W	4.4

HJC Confidential

Static Parameter Characteristics (Tj=25°C Unless otherwise specified)

PARAMETER	SYMBOL	Condition	UNIT	Min	Typ	Max
Drain-Source Breakdown Voltage	BV_{DSS}	V_{GS}= 0V, I_D=250μA	V	30	—	—
Zero Gate Voltage Drain Current	I_{DSS}	V_{DS}=30V, V_{GS}=0V	μA	—	—	1.0
Gate-Body Leakage Current	I_{GSS}	V_{GS}= ±20V, V_{DS}=0V	nA	—	—	±100
Gate Threshold Voltage	$V_{GS(th)}$	V_{DS}= V_{GS}, I_D=250μA	V	1.0	1.7	2.5
Static Drain-Source On-Resistance (3)	$R_{DS(ON)}$	V_{GS}= 10V, I_D=20A	mΩ	—	2.8	3.2
		V_{GS}= 4.5V, I_D=15A		—	4.5	6.0

Dynamic Parameters

PARAMETER	SYMBOL	Condition	UNIT	Min	Typ	Max
Input Capacitance	C_{iss}	V_{DS}=15V, V_{GS}=0V, f=1MHZ	pF	—	3550	—
Output Capacitance	C_{oss}			—	456	—
Reverse Transfer Capacitance	C_{rss}			—	388	—

Switching Parameters

PARAMETER	SYMBOL	Condition	UNIT	Min	Typ	Max
Turn-on Delay Time	$t_{D(on)}$	V_{GS}=10V, V_{DD}=15V, I_D=20A ,R_{GEN}=3Ω	nS	—	10	—
Turn-on Rise Time	t_r		nS	—	20	—
Turn-off Delay Time	$t_{D(off)}$		nS	—	51	—
Turn-off fall Time	t_f		nS	—	21	—
Total Gate Charge	Q_g	V_{DS}=15V, I_D=20A V_{GS}=10V	nC	—	75	—
Gate-Source Charge	Q_{gs}		nC	—	12	—
Gate-Drain Charge	Q_{gd}		nC	—	18.3	—

Drian-Source Diode Characteristics

PARAMETER	SYMBOL	Condition	UNIT	Min	Typ	Max
Diode Forward Voltage	V_{SD}	I_S=80A, V_{GS}=0V	V	—	—	1.2
Maximum Body-Diode Continuous Current	I_S	—	A	—	—	80
Reverse recover time	T_{rr}	I_S=80A, di/dt=100A/us, Tj=25°C	nS	—	19	—
Reverse recovery charge	Q_{rr}		nC	—	7	—

Note :
(1)Repetitive Rating: Pulse width limited by maximum junction temperature.
(2)EAS condition : Tj=25°C ,VDD=15V,VG=10V,L=0.1mH,IAS=42A,Rg=25Ω.
(3)Pulse Test: Pulse Width ≤ 300μs, Duty Cycle ≤ 2%.

HJC Confidential

Ratings And Characteristics Curves (Ta=25°C Unless otherwise specified)

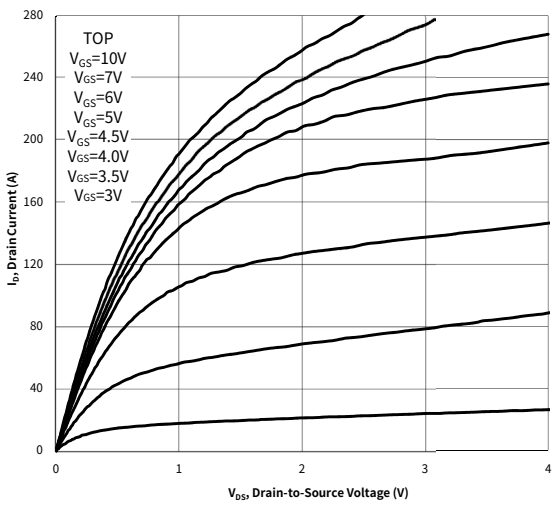

Fig.1 Output Characteristics

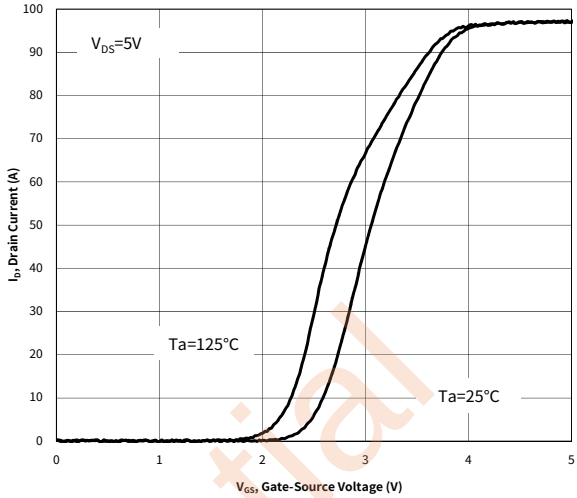

Fig.2 Transfer Characteristics

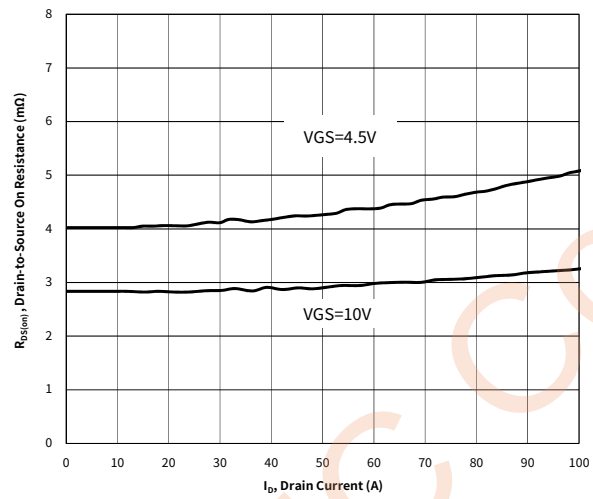

Fig.3 On-Resistance vs. Drain Current and Gate Voltage

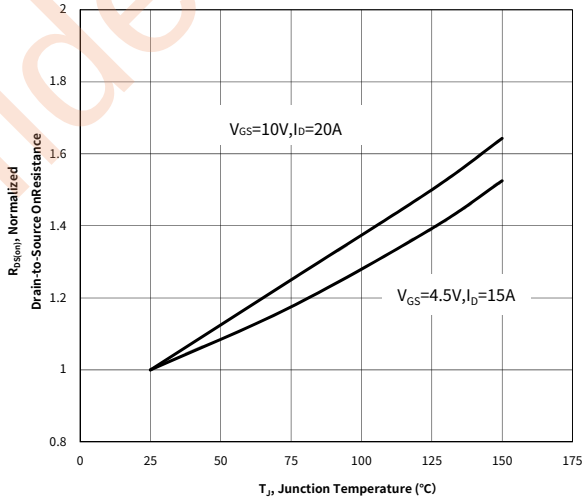

Fig.4 On-Resistance vs. Junction Temperature

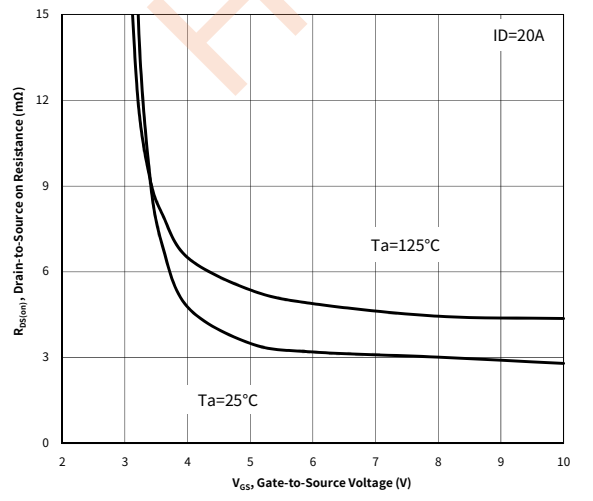

Fig.5 On-Resistance vs. Gate to Source Voltage

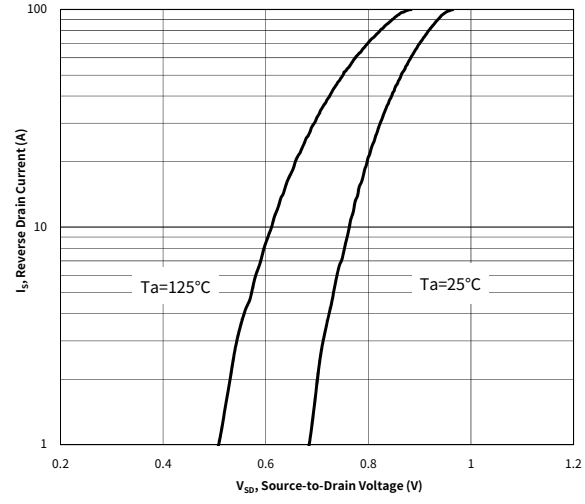

Fig.6 Typical Body-Diode Forward Characteristics

HJC Confidential

Ratings And Characteristics Curves (Ta=25°C Unless otherwise specified)

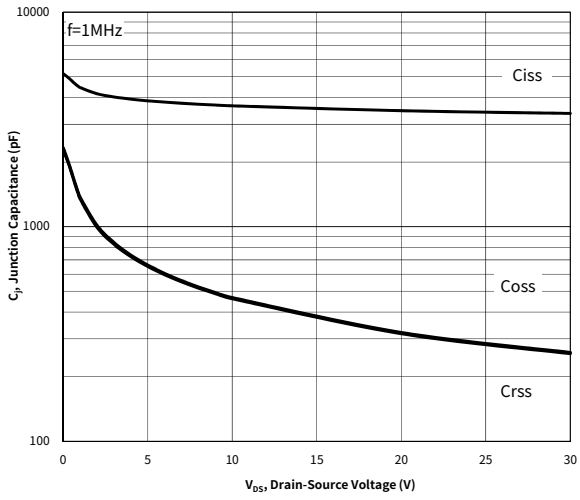

Fig.7 Capacitance Characteristics

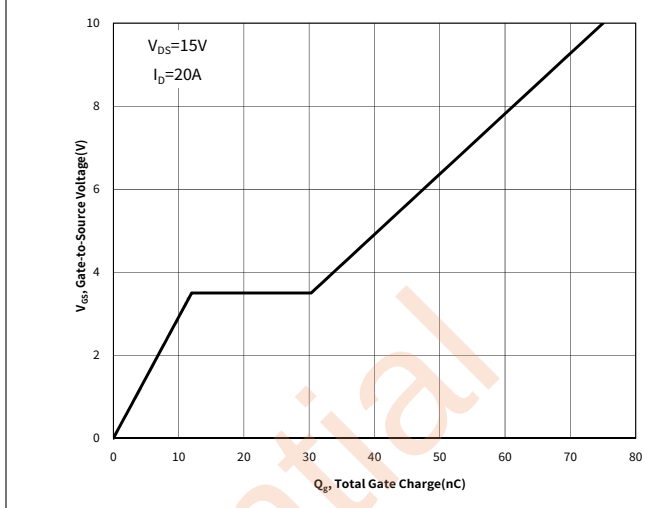

Fig.8 Gate Charge

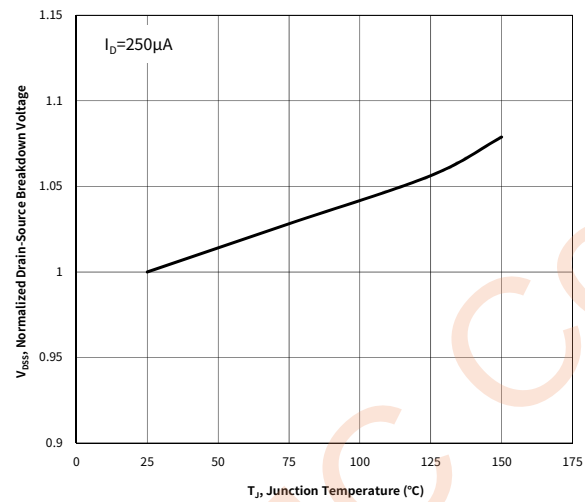

Fig.9 V(BR)DSS vs.Junction Temperature

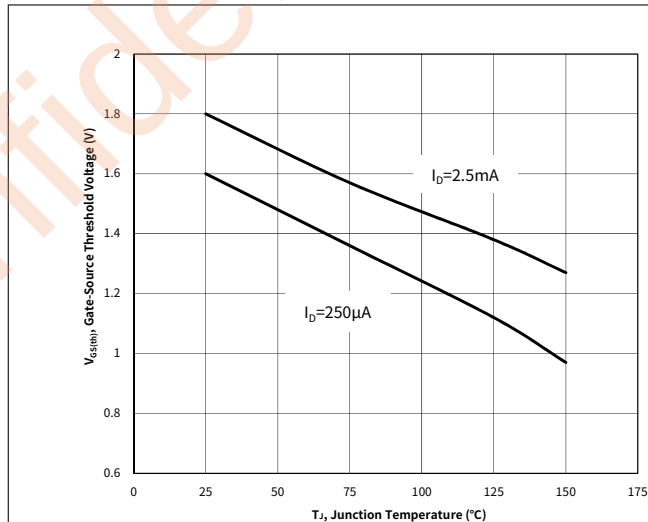

Fig.10 Gate Thresold Variation vs. Tj

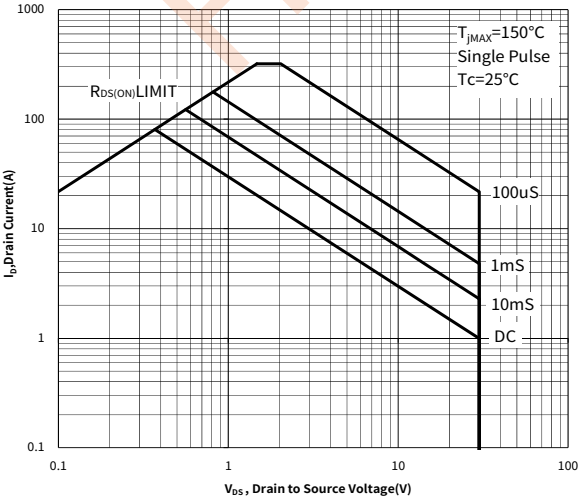

Fig.11 Safe Operation Area

HJC Confidential

Ratings And Characteristics Curves (Ta=25°C Unless otherwise specified)

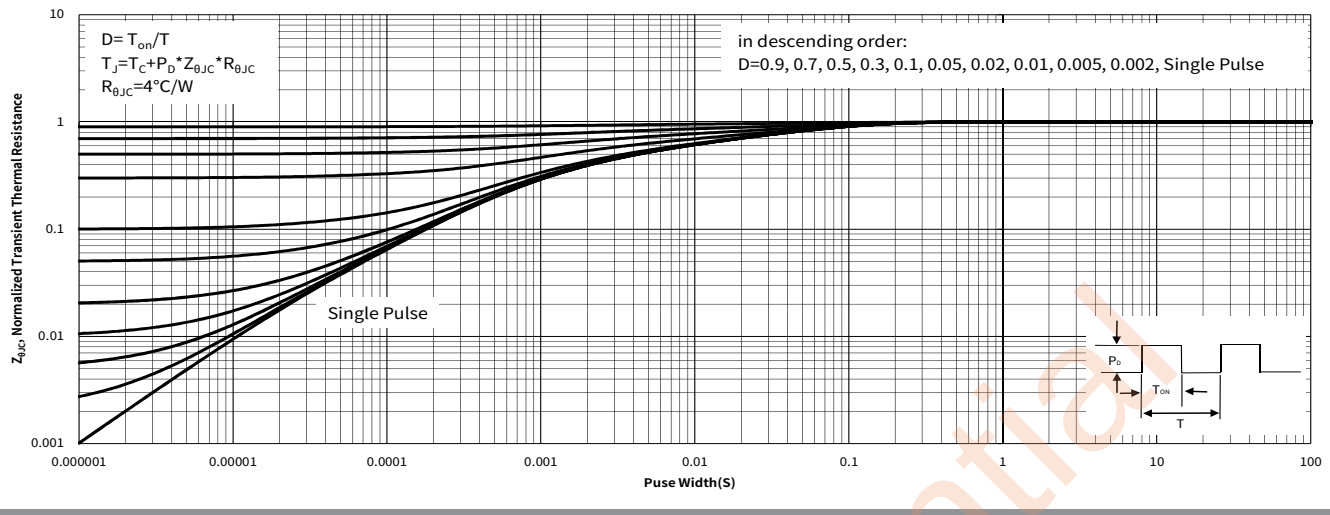

Fig.12 Normalized Maximum Transient Thermal Impedance

Package Outline Dimensions (PDFN3030)

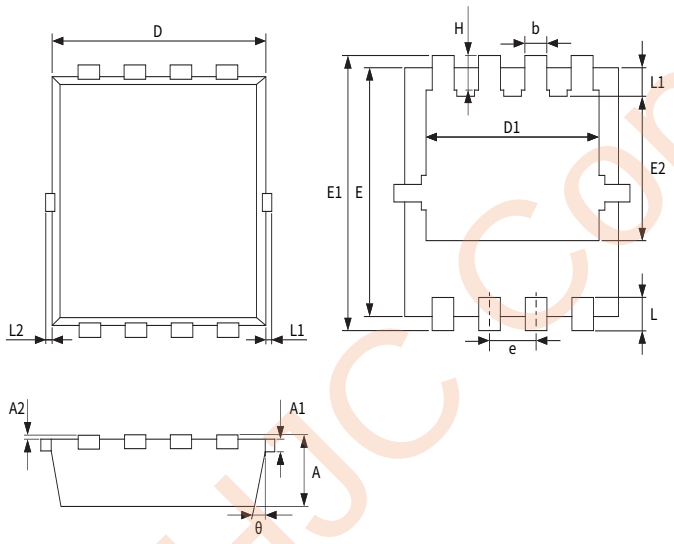

Symbol	Dimensions			
	Millimeters		Inches	
	Min.	Max.	Min.	Max.
A	0.650	0.900	0.026	0.035
A1	0.152 REF.		0.006 REF.	
A2	0~0.05		0~0.002	
D	2.90	3.200	0.114	0.126
D1	2.300	2.600	0.091	0.102
E	2.900	3.200	0.114	0.126
E1	3.150	3.450	0.124	0.136
E2	1.535	1.935	0.060	0.076
b	0.200	0.400	0.008	0.016
e	0.550	0.750	0.022	0.030
L	0.300	0.500	0.012	0.020
L1	0.180	0.480	0.007	0.019
L2	0~0.100		0~0.004	
L3	0~0.100		0~0.004	
H	0.315	0.515	0.012	0.020
θ	9°	13 °	9°	13 °

Suggested Pad Layout

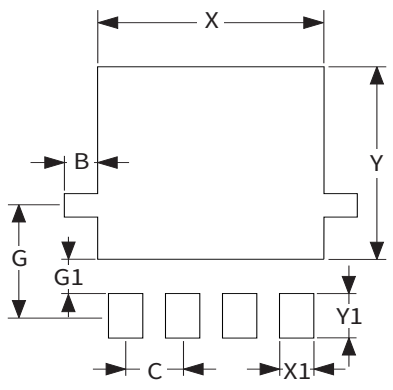

Symbol	Dimensions			
	Millimeters		Inches	
	Min.	Max.	Min.	Max.
B	0.34	0.36	0.013	0.014
C	0.55	0.75	0.022	0.030
G	1.35	1.55	0.054	0.062
G1	0.37	0.57	0.014	0.022
X	2.55	2.75	0.102	0.110
X1	0.30	0.50	0.012	0.020
Y	2.40	2.60	0.096	0.102
Y1	0.46	0.66	0.018	0.026

HJC Confidential

1.Gate Charge Test Circuit & Waveforms

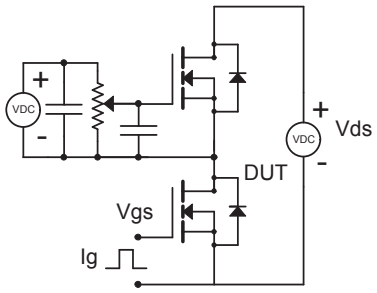

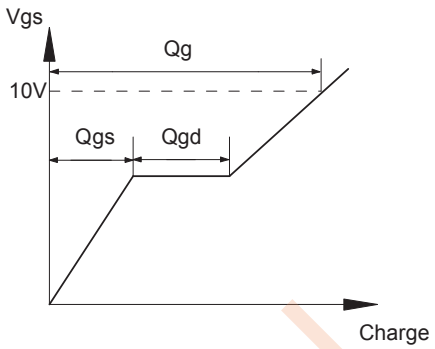

2. Resistive Switching Test Circuit & Waveforms

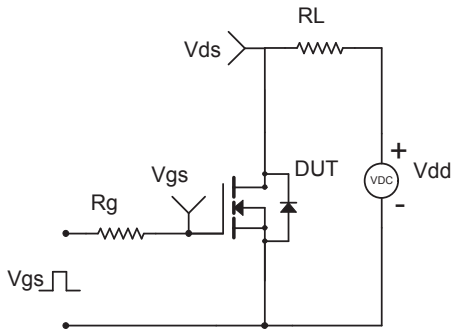

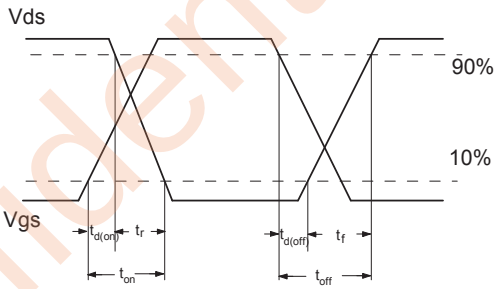

3.Unclamped Inductive Switching (UIS) Test Circuit & Waveforms

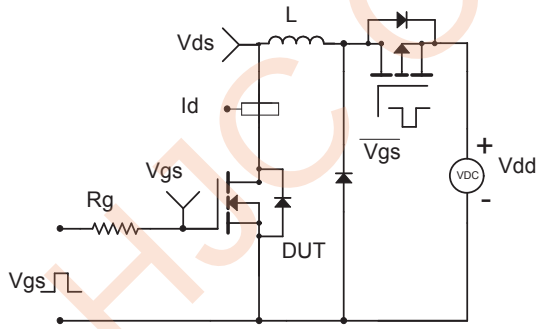

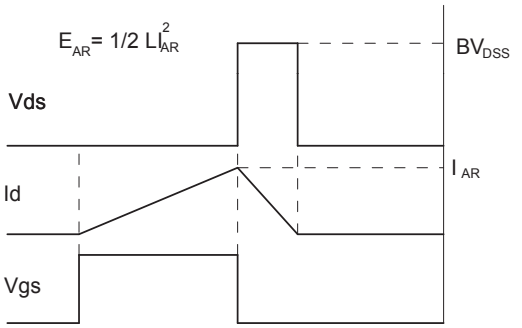

4.Diode Recovery Test Circuit & Waveforms

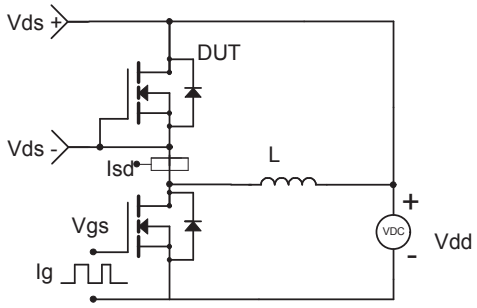

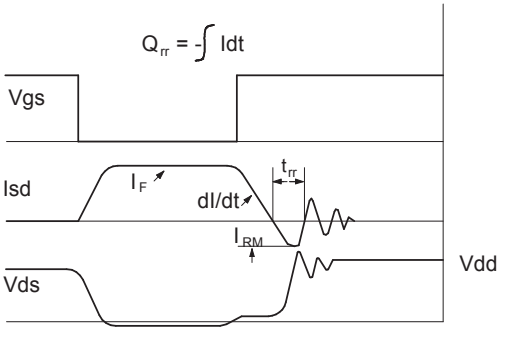

HJC confidential