PRODUCT CATALOG

HIROSE ELECTRIC CO., LTD.

KM32A Series

2.0mm Pitch, 0.5 Terminal Tab Size, Wire-to-Board Connector

P=2.0mm

P=2.0mm

Space-Saving

125℃

High Temp

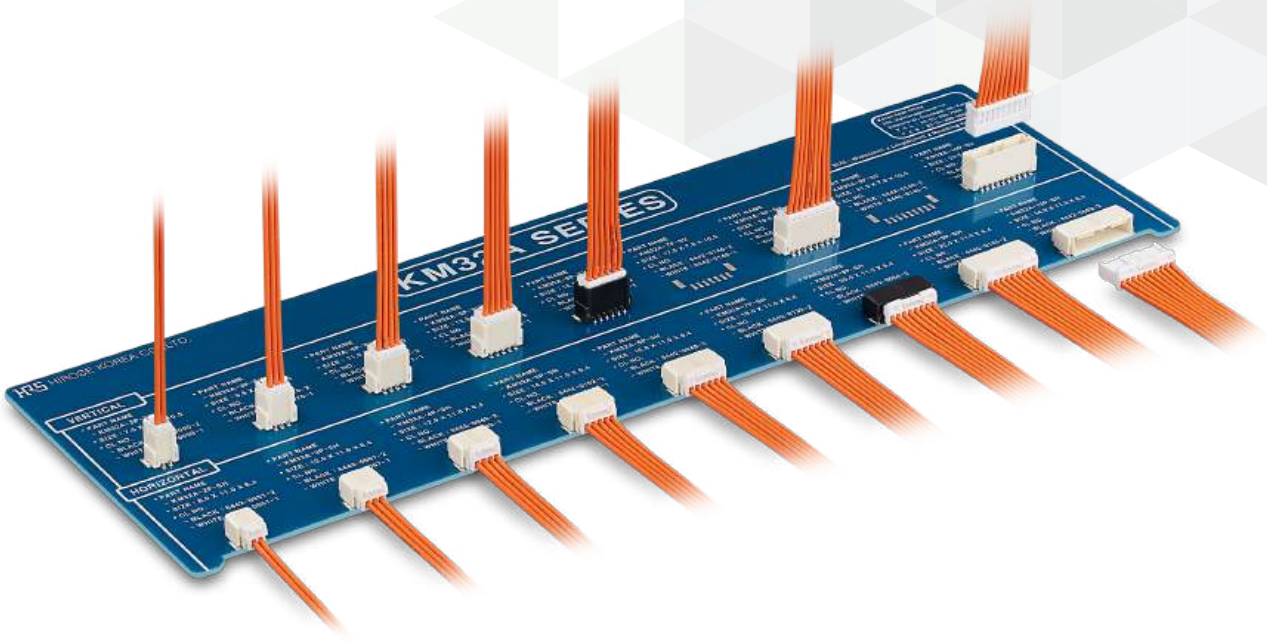

Mar.1.2026 Copyright 2026 HIROSE ELECTRIC CO., LTD. All Rights Reserved.

Product Page
https://www.hirose.com/en/product/series/KM32A

Aug. 2025

Features

1. Space-saving and Wide Variations

Space-saving design reduces the size of end products.
Multiple variations are available.
- Interface Types：Straight / Right Angle
- Single-row

Mated Combination Ex) 2 pos.

Straight Type **Right Angle Type**

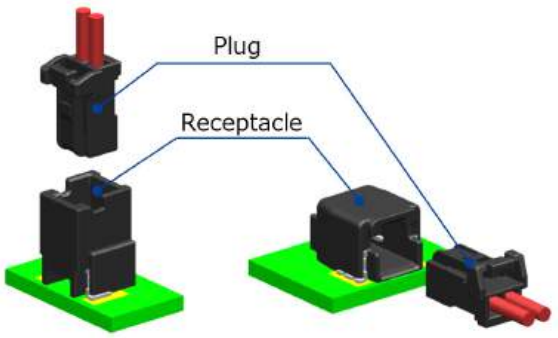

2. Meets strict automotive requirements.

3. Center lock design prevents incomplete mating, mis-insertion, and lock damage

Lock Damage Prevention Design

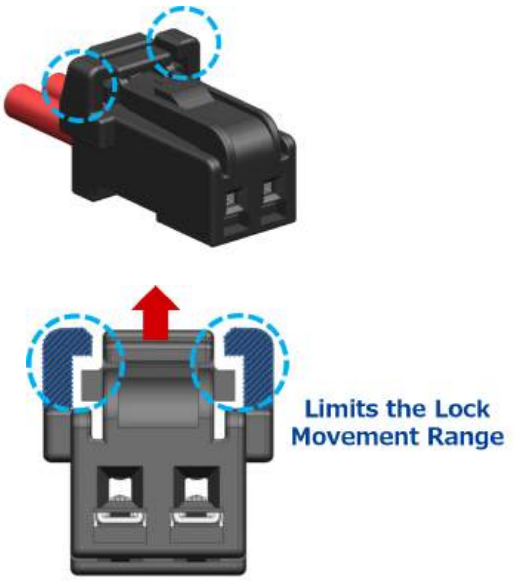

- Prevents Lock Damage
- Limits Lock Movement Range and Prevents Cable Snaring

Mar.1.2026 Copyright 2026 HIROSE ELECTRIC CO., LTD. All Rights Reserved.

4. Secure Terminal Retention and Audible Click Feedback

Without a retainer, the actual terminal retention force is a maximum of 60N (Note).
(Note) Specification retention force : 35N Min.

The design ensures that contacts remain securely in place during wiring, even without a retainer.

The audible click provides clear confirmation of secure mating, reducing the risk of improper connections.

Excellent Contact Retention

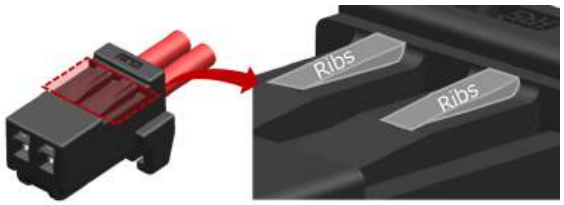

Increase terminal retention by adding ribs

High Coupling Sound Design

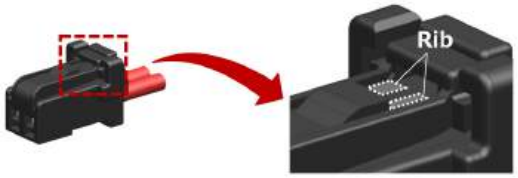

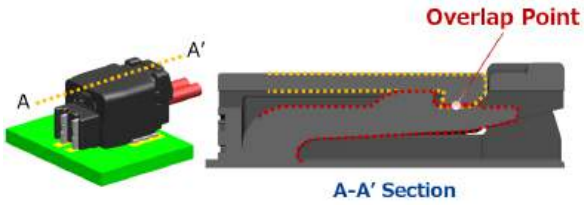

The addition of ribs to the lever overlap generates a distinct audible click.

5. Unique Contact Design Ensures Reliable Vibration Resistance

Enhanced contact design ensures reliability under intense vibration.

Vibration-Resistant Terminal Design

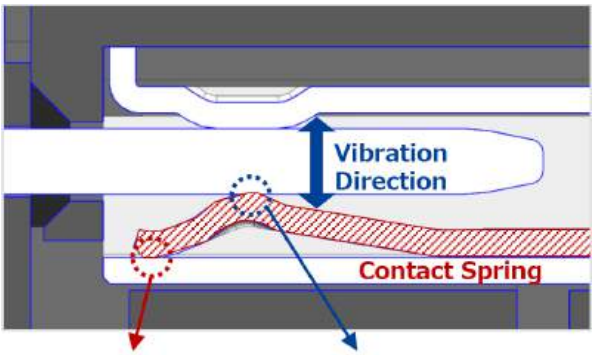

The contact spring is firmly fixed, ensuring enhanced vibration resistance.

Contact Between Female Terminal and Tab Terminal

Mar.1.2026 Copyright 2026 HIROSE ELECTRIC CO., LTD. All Rights Reserved.

Product Specifications

Rated Current	20 AWG	22 AWG	Operating Temperature (Note 1)	-40 to +125°C
	5A	3A		
Rated Voltage	60V AC/DC			

Items	Specifications	Conditions
Low Voltage Current Resistance	25mΩ Max.	Apply current 10mA
Insulation Resistance	1,000MΩ Min.	Measured at 500V DC
Withstanding Voltage	No insulation breakdown.	Apply 1,000V AC for 1 minute
Mating Durability	Low voltage current resistance：25mΩ Max. Insertion and removal force : 75N Max. Terminal retention force : 35N Min.	10 times
Thermal Shock	Low voltage current resistance：25mΩ Max. Voltage drop：25mV/A Max. Terminal Crimp Strength：50N Min. Terminal retention force：35N Min. Connector retention force：100N Min.	Leave it at +125°C(Max.) and -40°C(Min.) for about 1,000 cycles

Note 1 : Includes the temperature rise due to current flow.
Note 2 : Please refer to the specification sheet for details.

Materials / Finish

Product	Component	Materials	Color / Finish
Receptacle	Insulator	PPS	White or Black
	Male Contact	Brass	Tin Plating
	Retention Tab	Brass	Tin Plating
Plug	Insulator	PA66	White or Black
	Female Contact	Copper Alloy	Tin Plating

Mar.1.2026 Copyright 2026 HIROSE ELECTRIC CO., LTD. All Rights Reserved.

Product Number Structure

Refer to the chart below when determining the product specifications from the product number.
Please select from the product numbers listed in this catalog when placing orders.

Receptacle / Plug

KM32A	-	2	P	-	SV	(W)	(CAP)	(800)
❶		❷	❸		❹	❺	❻	

Crimp Contact

KM32A	F	TML	(L)	(800)
❶	❼	❹	❽	

❶ Series Name	KM32A	❺ Color (Note)	W : White B : Black
❷ No. of Pos.	Straight : 2-6, 8, 10pos. Right Angle : 2-6, 8, 10pos.	❻ Etc.	Cap : With Cap
❸ Connector Type	P : Receptacle S : Plug	❼ Product Type	F : Female Crimp Contact
❹ Product Type	SV : Straight SMT SH : Right Angle SMT HU : Plug Housing TML : Crimp Contact	❽ Contact Size	L : Large (Applicable Cable : 20-22 AWG)

Note : There is no mating key code structure. Combinations are possible regardless of the color.

Mar.1.2026 Copyright 2026 HIROSE ELECTRIC CO., LTD. All Rights Reserved.

Straight Receptacle

Single-row

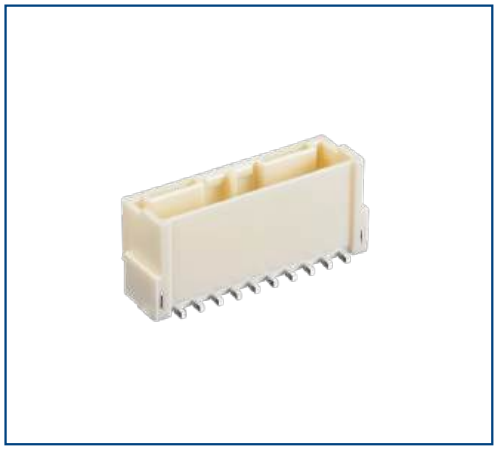

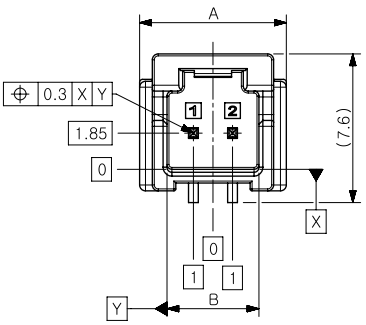

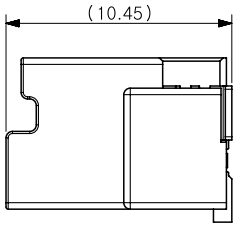

Recommended
PCB Pattern (t=1.6mm)

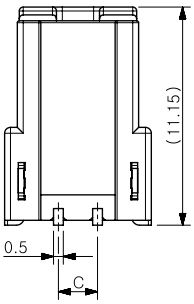

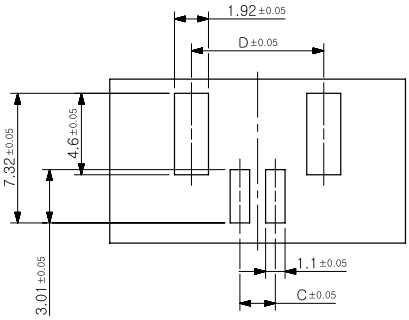

Unit : mm

Part No.	HRS No.	Color (Note 1)	No. of Pos.	A	B	C	D	Purchase Unit
KM32A-2P-SV(B)(CAP)(800)	CL0480-1157-0-00	Black	2	7.5	4.7	2.0	7.47	510pcs per reel
KM32A-2P-SV(W)(CAP)(800)	CL0480-1158-0-00	White						
KM32A-3P-SV(B)(CAP)(800)	CL0480-1161-0-00	Black	3	9.5	6.7	4.0	9.47	
KM32A-3P-SV(W)(CAP)(800)	CL0480-1162-0-00	White						
KM32A-4P-SV(B) (CAP)(800)	CL0480-1165-0-00	Black	4	11.5	8.7	6.0	11.47	
KM32A-4P-SV(W)(CAP)(800)	CL0480-1166-0-00	White						
KM32A-5P-SV(B)(CAP)(800)	CL0480-1169-0-00	Black	5	13.5	10.7	8.0	13.47	
KM32A-5P-SV(W)(CAP)(800)	CL0480-1188-0-00	White						
KM32A-6P-SV(B)(CAP)(800)	CL0480-1172-0-00	Black	6	15.5	12.7	10.0	15.47	
KM32A-6P-SV(W)(CAP)(800)	CL0480-1173-0-00	White						
KM32A-7P-SV(B)(CAP)(800)	Under Planning (Note 2)	Black	7	17.5	14.7	12.0	17.47	
KM32A-7P-SV(W)(CAP)(800)	Under Planning (Note 2)	White						
KM32A-8P-SV(B)(CAP)(800)	CL0480-1176-0-00	Black	8	19.5	16.7	14.0	19.47	
KM32A-8P-SV(W)(CAP)(800)	CL0480-1177-0-00	White						
KM32A-9P-SV(B)(CAP)(800)	Under Planning (Note 2)	Black	9	21.5	18.7	16.0	21.47	
KM32A-9P-SV(W)(CAP)(800)	Under Planning (Note 2)	White						
KM32A-10P-SV(B)(CAP)(800)	CL0480-1180-0-00	Black	10	23.5	20.7	18.0	23.47	
KM32A-10P-SV(W)(CAP)(800)	CL0480-1181-0-00	White						

Note 1 : There is no mating key code structure. Combinations are possible regardless of the color.
Note 2 : Products without HRS No. are currently being planned for development.
Please contact a Hirose representative regarding questions on pin count variation development.

Mar.1.2026 Copyright 2026 HIROSE ELECTRIC CO., LTD. All Rights Reserved.

Right Angle Receptacle

Single-row



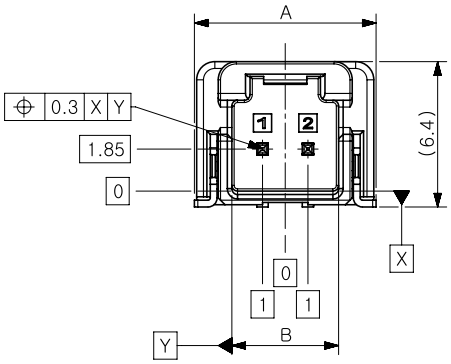

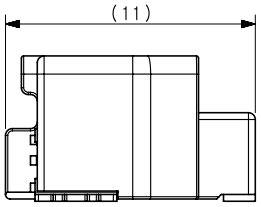

Recommended
PCB Pattern (t=1.6mm)

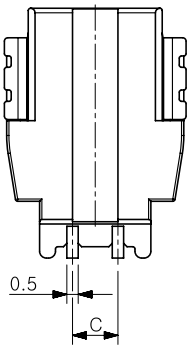

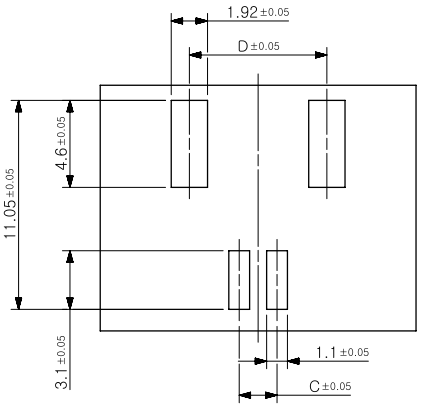

Unit : mm

Part No.	HRS No.	Color (Note 1)	No. of Pos.	A	B	C	D	Purchase Unit
KM32A-2P-SH(B)(800)	CL0480-1155-0-00	Black	2	8.0	4.7	2.0	7.27	840pcs per reel
KM32A-2P-SH(W)(800)	CL0480-1156-0-00	White						
KM32A-3P-SH(B)(800)	CL0480-1159-0-00	Black	3	10.0	6.7	4.0	9.27	
KM32A-3P-SH(W)(800)	CL0480-1160-0-00	White						
KM32A-4P-SH(B)(800)	CL0480-1163-0-00	Black	4	12.0	8.7	6.0	11.27	
KM32A-4P-SH(W)(800)	CL0480-1164-0-00	White						
KM32A-5P-SH(B)(800)	CL0480-1167-0-00	Black	5	14.0	10.7	8.0	13.27	
KM32A-5P-SH(W)(800)	CL0480-1168-0-00	White						
KM32A-6P-SH(B)(800)	CL0480-1170-0-00	Black	6	16.0	12.7	10.0	15.27	820pcs per reel
KM32A-6P-SH(W)(800)	CL0480-1171-0-00	White						
KM32A-7P-SH(B)(800)	Under Planning (Note 2)	Black	7	18.0	14.7	12.0	17.27	730pcs per reel
KM32A-7P-SH(W)(800)	Under Planning (Note 2)	White						
KM32A-8P-SH(B)(800)	CL0480-1174-0-00	Black	8	20.0	16.7	14.0	19.27	
KM32A-8P-SH(W)(800)	CL0480-1175-0-00	White						
KM32A-9P-SH(B)(800)	Under Planning (Note 2)	Black	9	22.0	18.7	16.0	21.27	
KM32A-9P-SH(W)(800)	Under Planning (Note 2)	White						
KM32A-10P-SH(B)(800)	CL0480-1178-0-00	Black	10	24.0	20.7	18.0	23.27	
KM32A-10P-SH(W)(800)	CL0480-1179-0-00	White						

Note 1 : There is no mating key code structure. Combinations are possible regardless of the color.
Note 2 : Products without HRS No. are currently being planned for development.
Please contact a Hirose representative regarding questions on pin count variation development.

Mar.1.2026 Copyright 2026 HIROSE ELECTRIC CO., LTD. All Rights Reserved.

Plug

Single-row

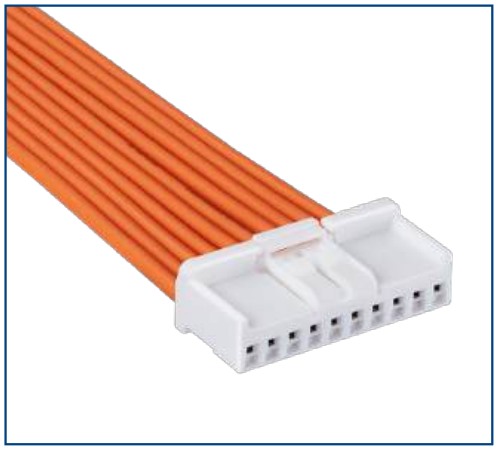

Shown with crimp contact inserted.

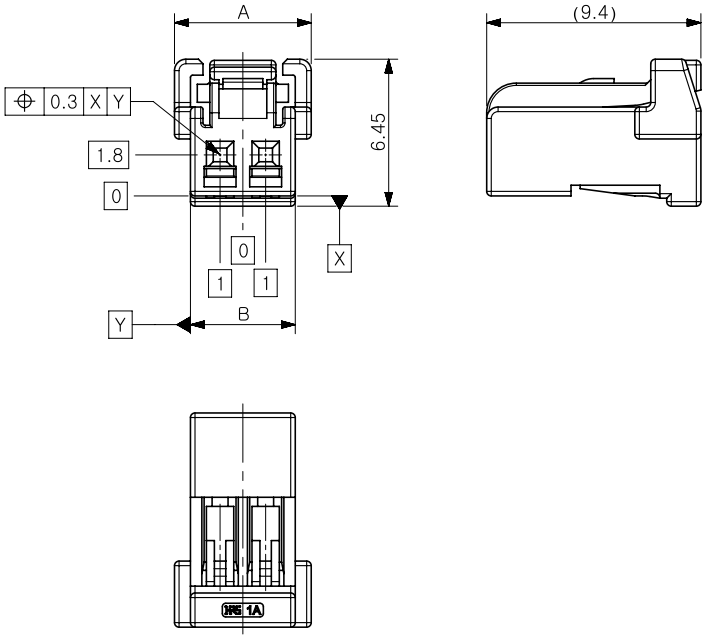

Unit : mm

Part No.	HRS No.	Color (Note 1)	No. of Pos.	A	B	Purchase Unit
KM32A-2S-HU(B)(800)	CL0480-1182-0-00	Black	2	6.0	4.6	4,000pcs per bag
KM32A-2S-HU(W)(800)	CL0480-1183-0-00	White				
KM32A-3S-HU(B)(800)	CL0480-1184-0-00	Black	3	8.0	6.6	
KM32A-3S-HU(W)(800)	CL0480-1185-0-00	White				
KM32A-4S-HU(B)(800)	CL0480-1186-0-00	Black	4	8.6	8.6	
KM32A-4S-HU(W)(800)	CL0480-1187-0-00	White				
KM32A-5S-HU(B)(800)	CL0480-1146-0-00	Black	5	10.6	10.6	
KM32A-5S-HU(W)(800)	CL0480-1189-0-00	White				
KM32A-6S-HU(B)(800)	CL0480-1190-0-00	Black	6	12.6	12.6	
KM32A-6S-HU(W)(800)	CL0480-1191-0-00	White				
KM32A-7S-HU(B)(800)	Under Planning (Note 2)	Black	7	14.6	14.6	3,000pcs per bag
KM32A-7S-HU(W)(800)	Under Planning (Note 2)	White				
KM32A-8S-HU(B)(800)	CL0480-1192-0-00	Black	8	16.6	16.6	
KM32A-8S-HU(W)(800)	CL0480-1193-0-00	White				
KM32A-9S-HU(B)(800)	Under Planning (Note 2)	Black	9	18.6	18.6	
KM32A-9S-HU(W)(800)	Under Planning (Note 2)	White				
KM32A-10S-HU(B)(800)	CL0480-1194-0-00	Black	10	20.6	20.6	2,000pcs per bag
KM32A-10S-HU(W)(800)	CL0480-1195-0-00	White				

Note 1 : There is no mating key code structure. Combinations are possible regardless of the color.
Note 2 : Products without HRS No. are currently being planned for development.
Please contact a Hirose representative regarding questions on pin count variation development.

Mar.1.2026 Copyright 2026 HIROSE ELECTRIC CO., LTD. All Rights Reserved.

Crimp Contact



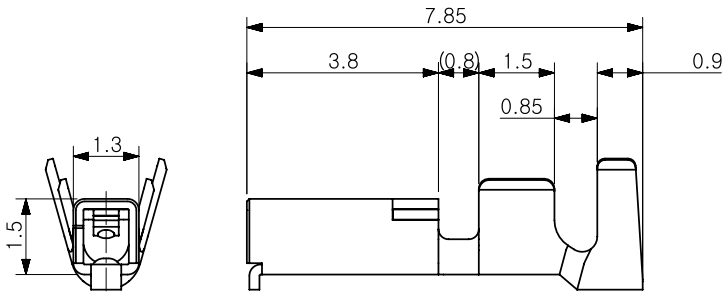

Part No.	HRS No.	Applicable Cable	Purchase Unit
KM32A F TML(L)(800)	CL0480-1115-0-00	20 AWG (0.5sq) 22 AWG (0.3sq)	7,000pcs per reel

Applicable Crimping Tools

Type	Part No.	HRS No.	Applicable Contact
Automatic Crimp Press	CM-105C	CL0901-0001-0-00	-
Applicator	AP105-KM32A-2022S	CL0901-7004-0-00	KM32A F TML(L)(800)

Note 1 : Please conduct crimping work according to the Crimp Quality Standard and the Crimp Condition Table.
Note 2 : Any problems that occur from using tools other than those specified by Hirose are not covered by the warranty.

Mated Dimensions Diagram

Straight Receptacle to Plug Connection

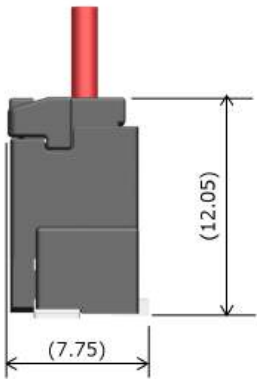

Right Angle Receptacle to Plug Connection

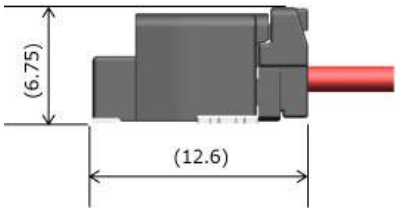

Mar.1.2026 Copyright 2026 HIROSE ELECTRIC CO., LTD. All Rights Reserved.

Usage Precautions

Recommended Temperature Profile	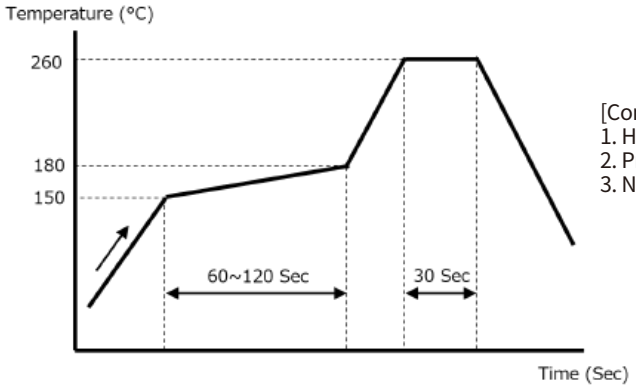 [Conditions] 1. Heating：260°C± 5°C , 30 sec. Max. 2. Preheating：150 to 180°C , 60 to 120 sec. 3. Number of Reflow Cycles : 3 cycles Max. *Measurement is conducted at the contact lead part. Soldering results may change depending on conditions such as solder paste type, manufacturer, PCB size, and other soldering materials. Please determine all mounting conditions before use. *This temperature profile is a recommended value.
Cautions	1. Forcing the connector out might cause damage. If it's difficult to remove, press down gently on the lock before releasing. 2. Always disconnect the power before reseating the connector. 3. Avoid touching the terminal area while the power is active to prevent hazards. 4. For harnessing guidelines, please consult a Hirose representative.

While Taking into Consideration

Specifications mentioned in this catalog are reference values.
When considering to order or use this product, please review the Drawing and Product Specifications sheets.
Use an appropriate cable when using the connector in combination with cables.
If considering usage of a non- specified cable, please contact your sales representative.
If assembly process is done by jigs & tools which are not identified by Hirose, the warranty of the product may beaffected.
If considering usage for below mentioned applications, please contact your sales representative.
In cases where the application will demand a high level of reliability, such as automotive, medical instruments,
Public infrastructure, aerospace/ defense etc. Hirose must review before assurance of reliability can be given.

Mar.1.2026 Copyright 2026 HIROSE ELECTRIC CO., LTD. All Rights Reserved.

HIROSE ELECTRIC CO., LTD. 2-6-3,Nakagawa Chuoh,Tsuzuki-Ku,Yokohama-Shi 224-8540,JAPAN
https://www.hirose.com/

※ The contents of this catalog are current as of date of 08/2025. Contents are subject to change without notice for the purpose of improvements.
※ The HRS logo and "HIROSE" are trademarks of HIROSE ELECTRIC CO., LTD.