www.dzyjzj.com Tel:0755-27575531 Fax:0755-27576267

加防水圈示意图

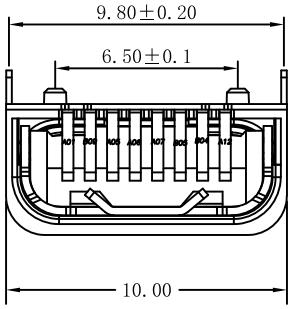

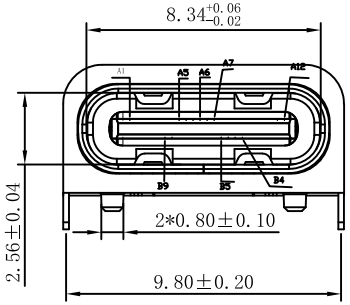

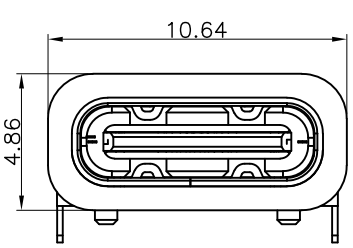

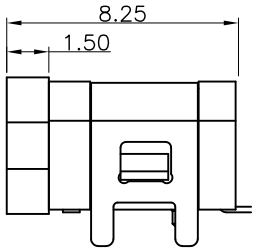

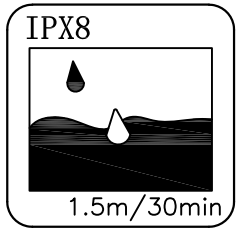

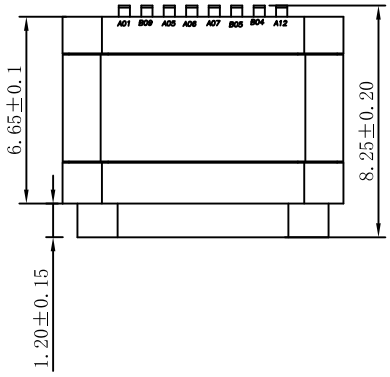

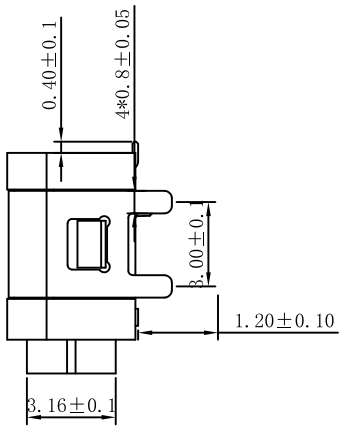

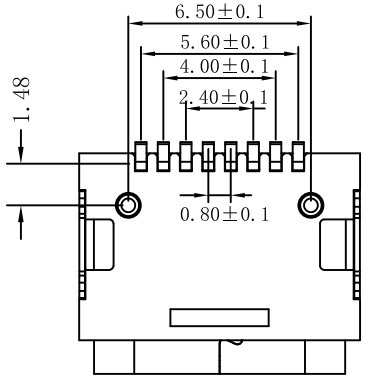

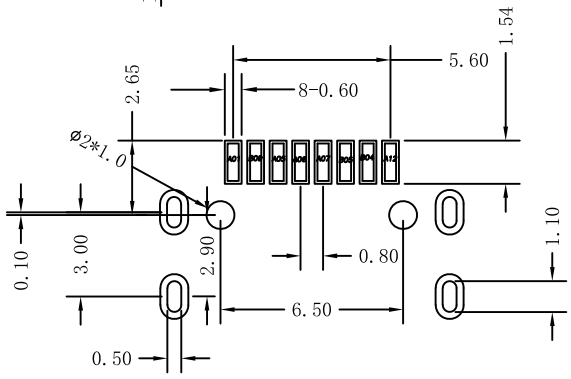

NOTE:
1. MATERIAL:
   1.1 INSULATOR: HIGH TEMPERATURE PLASTIC UL 94 V-0; Black Color
   1.2 CONTACT: C7025(T=0.20mm)
   1.3 SHELL:STAINLESS STEEL(T=0.20mm)
   1.4 MID PLATE:STAINLESS STEEL(T=0.15mm)
2. ELECTRICAL CHARACTERISTICS;
   2.1 CONTACT RESISTANCE: 40mΩ Max FOR INITIAL. 10mΩ CHANGE AFTER TEST. MEASURE AT 20mV, 100mA.
   2.3 DIELECTRIC WITHSTANDING VOLTAGE: 100V AC R.M.S.
   2.4 INSULATION RESISTANCE 100MΩ Min
   2.5 OPERATING TEMPERATURE: -40° C ～ 85° C
3 MECHANICAL CHARACTERISTICS:
   3.1 MATING FORCE: 5~20 N.
   3.2 UNMATED FORCE: 8~20N INITIAL TEST; 6~20N DURABILITY AFTER TEST
   3.3 DURABILITY: 10,000 CYCLES
4. PLATING
   4.1 TERMINAL CONTACT: Au 3u'' PLATING ON CANTACT AREA; TIN 50u'' Min TING ON SOLDER TAIL,SN 80u'' Min UNDERPLATING OVERALL
   4.2 SHELL: 50u" Min. NICKEL ALL OVER,
   4.3 MID PLATE: 50u" Min. NICKEL ALL OVER,

深圳市华宇创精密电子有限公司

TOLERANCE: X.X ±0.30, X.XX ±0.25, X.XXX ±0.15, X.° ±2°, X.X" ±0.5'	DRAWED BY : 陈一鸣	DATE : 2014-02-23	PART NAME: USB TYPE C 防水母座8P 板上SMT L=7.85带柱
	CHECKED BY: 马跃	DATE : 2014-02-23	PART NO. HYCW588-USBC08-785B
			MOLD NO.
UNIT: mm [inch]	APPROVED BY: 邱敏	DATE : 2014-02-23	DRAW NO: HYC-2610121146
SCALE:1:1 SIZE: A4			SHEET NO. 1 OF 1

www.dzyjzj.com Tel:0755-27575531 Fax:0755-27576267

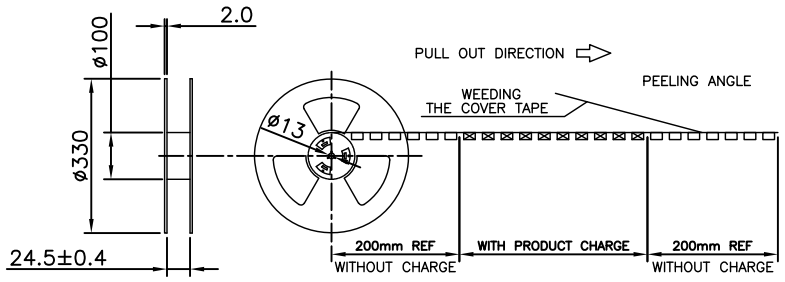

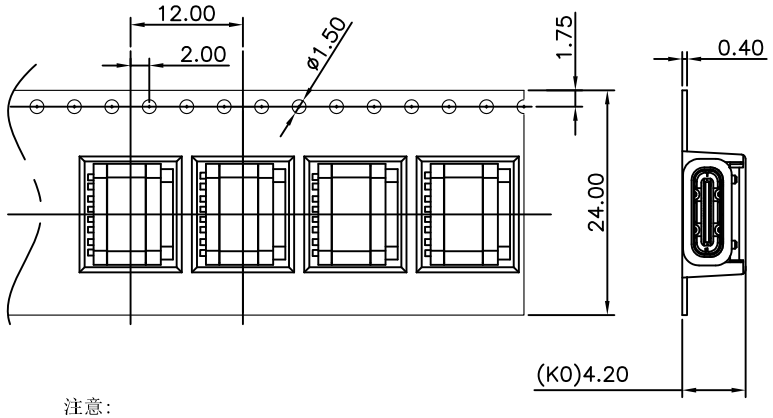

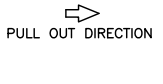

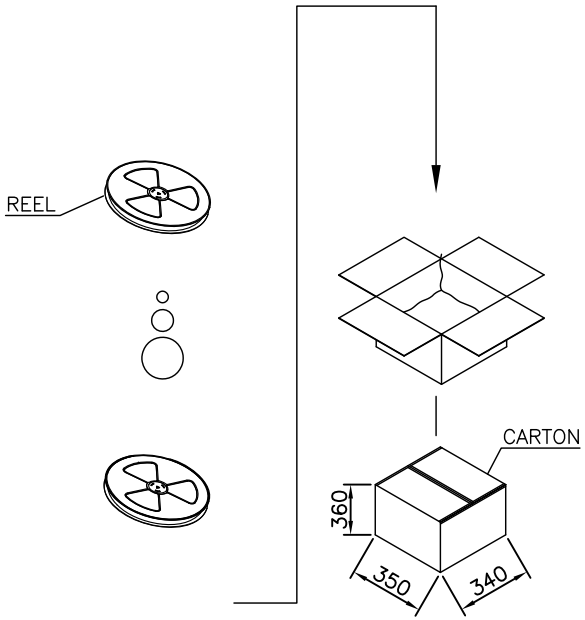

NOTE:
1.QUANTITY:600 PCS/RELL,6600PCS/CARTON.

注意:
1. 材料:
纸箱:纤维板，瓦楞，双层壁。
胶带:聚苯乙烯，耐热温度:120℃，白。
卷筒:聚苯乙烯，耐热温度:70℃，蓝色。
包装:聚乙烯，耐热温度:100℃。
2. 剥离强度:0.1 ~ 1.3 N(10 ~ 130克)
3. 脱皮速度:300mm /min。
4. 每个袋子都应包括干燥剂*1。
5. 外箱上贴号物料标签及RoHS标签
6. 同一产品只能装同一纸箱，不允其它产品;
7. 包装后，每盘真空包装

深圳市华宇创精密电子有限公司				
TOLERANCE: X.X ±0.30 X.XX ±0.25 X.XXX ±0.15 X.° ±2° X.X' ±0.5'	DRAWED BY : 陈一鸣	DATE : 2014-02-23	PART NAME: 包装图	
	CHECKED BY: 马跃	DATE : 2014-02-23	PART NO.	
	APPROVED BY: 邱敏	DATE : 2014-02-23	MOLD NO.	
UNIT: mm [inch]			DRAW NO:	
SCALE:1:1 SIZE: A4			SHEET NO.	1 OF 1