Low-Voltage Supervisory Circuit with Manual Reset

Features

- Precision Low-Voltage Monitoring
- 200-ms (typical) Reset Timeout
- Manual Reset Input
- Reset Output Stage
- Open Drain Active-Low Output (TPV821)
- Low-Power Consumption: 2.2 μA
- Guaranteed Reset Output Valid to VCC = 1 V
- Power Supply Glitch Immunity
- Specified from −40°C to +125°C
  - 5-Lead SOT-23-5 Package and 4-Lead SOT-143 Package

Applications

- Microprocessor Systems
- Computers
- Controllers
- Intelligent Instruments
- Portable Equipment

Description

The TPV821 is a supervisory circuit that monitors power supply voltage levels and provides a power-on reset signal.

A reset signal can also be asserted by an external manual reset input.

The reset periods are fixed at 200 ms (typical).

The TPV821 is available in an SOT23-5 package and an SOT143-4 package. The TPV821 typically consumes only 2.2 μA, suitable for low-power, portable applications.

Typical Application Circuit

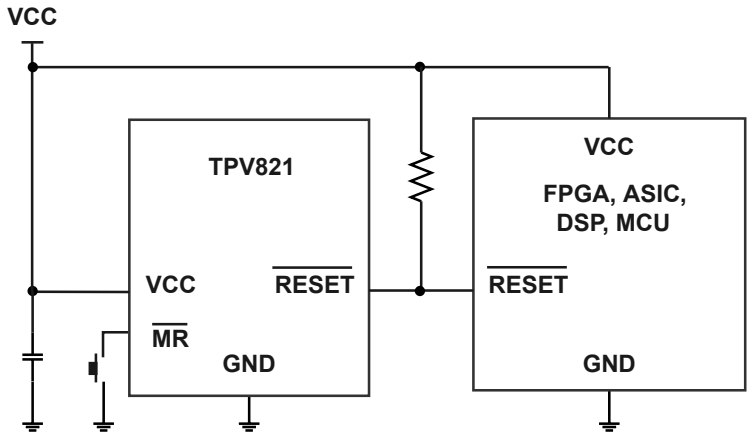

Table of Contents

Features 1
Applications 1
Description 1
Typical Application Circuit 1
Revision History 3
Pin Configuration and Functions 4
Specifications 5
Absolute Maximum Ratings 5
ESD, Electrostatic Discharge Protection 5
Thermal Information 5
Electrical Characteristics 6
Typical Performance Characteristics 8
Detailed Description 9
Overview 9
Functional Block Diagram 9
Feature Description 10
Application and Implementation 11
Application Information 11
Tape and Reel Information 12
Package Outline Dimensions 13
SOT23-5 13
SOT143-4 14
Order Information 15
IMPORTANT NOTICE AND DISCLAIMER 16

Revision History

Date	Revision	Notes
2019-07-07	Rev.A.0	Initial version
2024-11-20	Rev.A.1	• Updated to a new datasheet format • Added the Thermal Information, Tape and Reel Information, and Typical Application Circuit • Updated the Order Information • Updated reset timing diagram • Updated tape and reel dimensions and corrected marking typo

Pin Configuration and Functions

TPV821
SOT23-5 Package
Top View

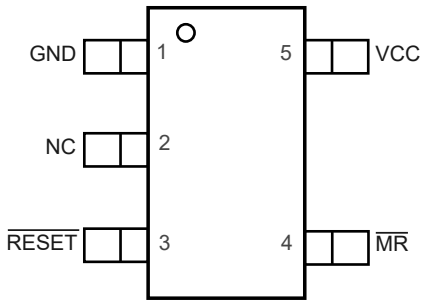

TPV821
SOT143-4 Package
Top View

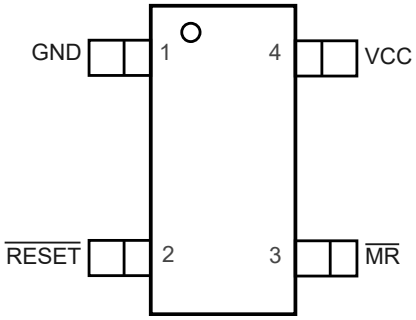

Table 1. Pin Functions

Pin No.		Name	Description
SOT23-5	SOT143-4		
1	1	GND	Ground.
2	NA	NC	Not connected.
3	2	$\overline{\text{RESET}}$	TPV821: Active-Low Reset Open Drain Output Stage. Asserted whenever VCC is below the reset threshold, V_{TH}.
4	3	$\overline{\text{MR}}$	Manual Reset Input. This is an active-low input, which, when forced low for at least 1 µs, generates a reset. It features a 50 kΩ internal pull-up.
5	5	VCC	Power Supply Voltage is being monitored.

Specifications

Absolute Maximum Ratings

Parameter		Min	Max	Unit
	VCC	−0.3	6	V
	Output Current		20	mA
	Operating Temperature Range	−40	125	°C
T_J	Maximum Junction Temperature		150	°C
T_{STG}	Storage Temperature Range	−65	150	°C
T_L	Lead Temperature (Soldering 10 sec)		260	°C

(1) Stresses beyond those listed under Absolute Maximum Ratings may cause permanent damage to the device. Exposure to any Absolute Maximum Rating condition for extended periods may affect device reliability and lifetime.

ESD, Electrostatic Discharge Protection

Parameter		Condition	Minimum Level	Unit
HBM	Human Body Model ESD	ANSI/ESDA/JEDEC JS-001 (1)	4	kV
CDM	Charged Device Model ESD	ANSI/ESDA/JEDEC JS-002 (2)	2	kV

(1) JEDEC document JEP155 states that 500-V HBM allows safe manufacturing with a standard ESD control process.
(2) JEDEC document JEP157 states that 250-V CDM allows safe manufacturing with a standard ESD control process.

Thermal Information

Package Type	θ_{JA}	θ_{JC}	Unit
SOT23-5	209	73	°C/W
SOT143-4	330	TBD	°C/W

Electrical Characteristics

All test conditions: V_{CC} = 1.53 V to 5.5 V, T_A = −40°C to +125°C, unless otherwise noted.

Parameter		Conditions	Min	Typ	Max	Unit
V_{CC}	VCC Operating Voltage Range		1		5.5	V
I_{CC}	Supply Current	V_{CC} = 1.8 V		2.2	10	μA
		V_{CC} = 5 V		6	15	μA
Reset Threshold Voltage						
V_{TH}	TPV8xxV		1.51	1.58	1.63	V
	TPV8xxW		1.62	1.67	1.71	V
	TPV8xxY		2.12	2.19	2.25	V
	TPV8xxZ		2.25	2.32	2.38	V
	TPV8xxR		2.55	2.63	2.70	V
	TPV8xxS		2.85	2.93	3.00	V
	TPV8xxT		3.00	3.08	3.15	V
	TPV8xxM		4.25	4.38	4.5	V
	TPV8xxL		4.5	4.63	4.75	V
	Reset Threshold Temperature Coefficient			60		ppm/°C
V_{HYS}	Reset Threshold Hysteresis			2 × V_{TH}		mV
t_{RD}	V_{CC} to Reset Delay	V_{TH} − V_{CC} = 100 mV		20		μs
t_{RP}	Reset Timeout Period		140	200	280	ms
V_{OL}	Reset Output Voltage (Push-Pull)	V_{CC} ≥ 1 V, I_{SINK} = 50 μA			0.3	V
	Reset Output Voltage (Push-Pull)	V_{CC}= Vth, I_{SINK} =1.2 mA V_{TH} ≥ 2.63 V			0.3	V
	Reset Output Voltage (Push-Pull)	V_{CC}= Vth, I_{SINK} = 3.2 mA V_{TH} ≥ 4 V			0.4	V
V_{OH}	Reset Output Voltage (Push-Pull)	V_{CC} ≥ 1.8 V, I_{SOURCE} = 200 μA	0.8 × V_{CC}			V
	Reset Output Voltage (Push-Pull)	V_{CC} = V_{TH}, I_{SOURCE} = 500 μA V_{TH} ≥ 2.63 V	0.8 × V_{CC}			V
	Reset Output Voltage (Push-Pull)	V_{CC} = V_{TH}, I_{SOURCE} = 800 μA V_{TH} ≥ 4 V	V_{CC}-1.5 V			V
V_{IL}	MR Input Low Threshold				0.3 × V_{CC}	V
V_{IH}	MR Input High Threshold		0.7 × V_{CC}			V
t_{PW_MR}	MR Input Pulse Width		1			μs
t_{GR_MR}	MR Glitch Rejection			100		nS

Parameter		Conditions	Min	Typ	Max	Unit
t_{d_MR}	MR to Reset Delay			200		nS
R_{UP_MR}	MR Pull-up Resistance			50		kΩ

Typical Performance Characteristics

All test conditions: V_{CC} = 3.3 V, T_A = +25°C, unless otherwise noted.

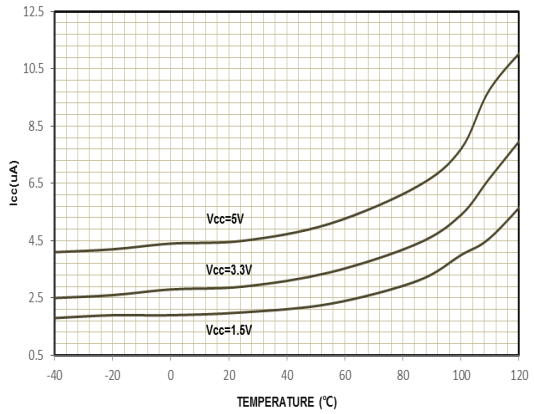

Figure 1. Supply Current vs. Temperature

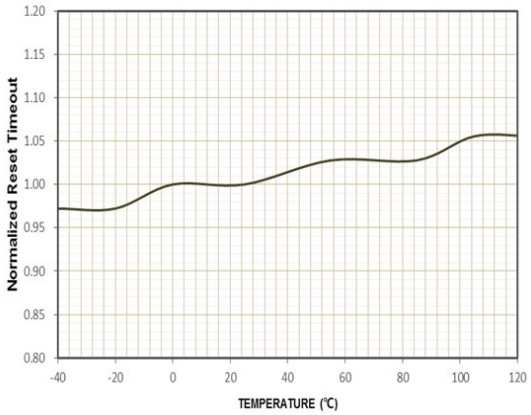

Figure 2. Normalized RESET Timeout Period vs. Temperature

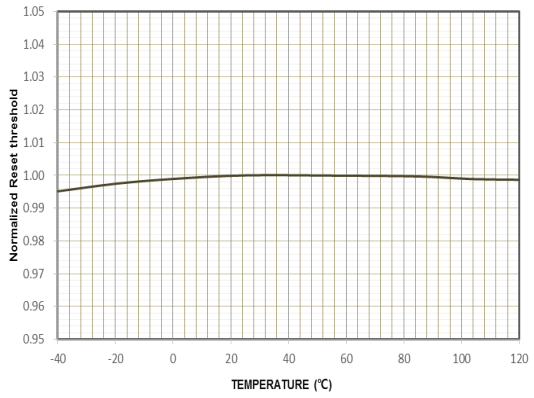

Figure 3. Normalized RESET Threshold vs. Temperature

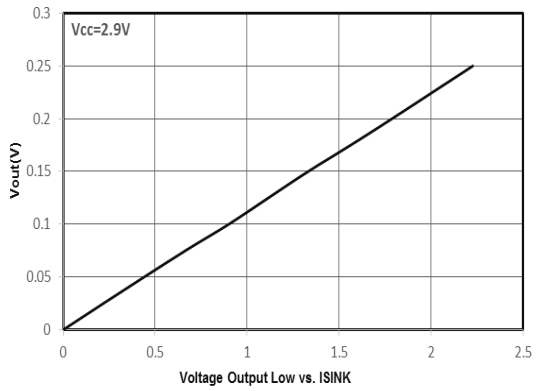

Figure 4. Voltage Output Low vs. ISINK

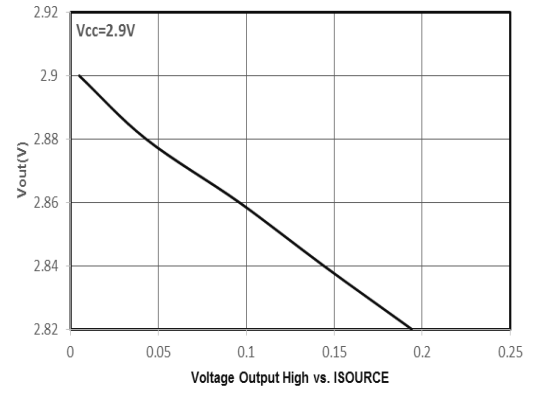

Figure 5. Voltage Output Low vs. ISOURCE

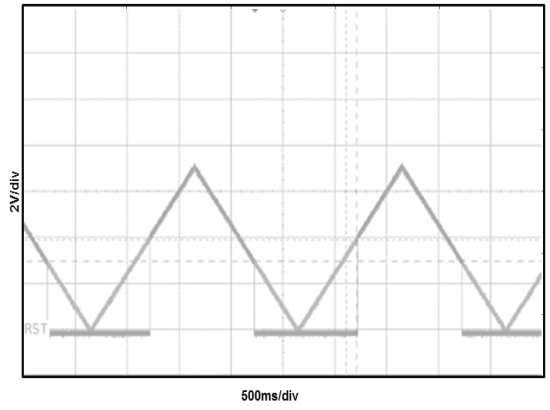

Figure 6. RESET Output Voltage vs. Supply Voltage

Detailed Description

Overview

The TPV821 provides supply voltage supervision as well as a manual reset function.

A reset signal is asserted when the supply voltage is below a preset threshold. In addition, the TPV821 allows supply voltage stabilization with a fixed timeout before the reset de-asserts after the supply voltage rises above the threshold.

A manual reset input is available to reset the microprocessor, for example, by using an external push-button.

Functional Block Diagram

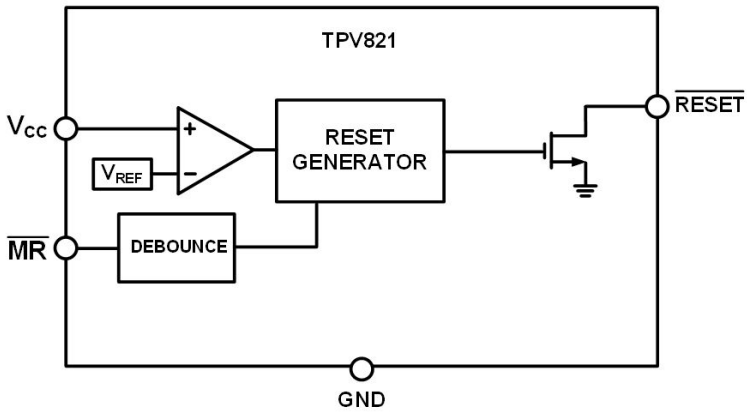

Figure 7. Functional Block Diagram

Feature Description

Reset Output

The TPV821 features an active-low or active-high push-pull output. For active-low output, the reset signal is guaranteed to be logic low for VCC down to 1 V. The reset output is asserted when VCC is below the reset threshold (VTH), and when MR is driven low. Reset remains asserted for the duration of the reset active timeout period (tRP) after VCC rises above the reset threshold after MR transitions from low to high. Figure 8 shows the reset (active low) outputs.

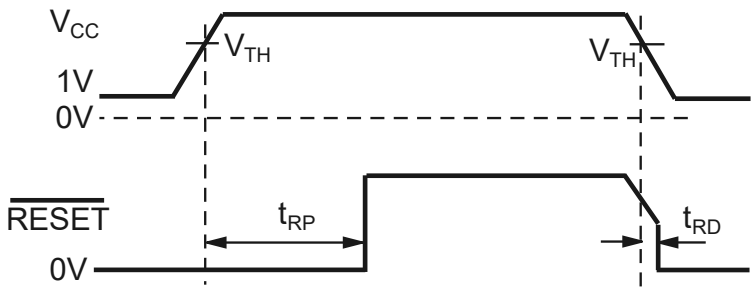

Figure 8. Reset Timing Diagram

Manual Reset Input

The TPV821 features a manual reset input (MR), which, when driven low, asserts the reset output. When MR transitions from low to high, reset remains asserted for the duration of the reset active timeout period before de-asserting.

The MR input has an internal pull-up resistor so that the input is always high when unconnected. Noise immunity is provided on the MR input, and fast, negative-going transients are ignored. A 0.1-μF capacitor between MR and ground provides additional noise immunity.

Application and Implementation

Note

Information in the following application sections is not part of the 3PEAK's component specification and 3PEAK does not warrant its accuracy or completeness. 3PEAK's customers are responsible for determining suitability of components for their purposes. Customers should validate and test their design implementation to confirm system functionality.

Application Information

The TPV821 is a supervisory circuit that monitors the power supply voltage levels and provides a power-on reset signal. A reset signal can also be asserted by an external manual reset input.

The following figure shows the typical application circuit.

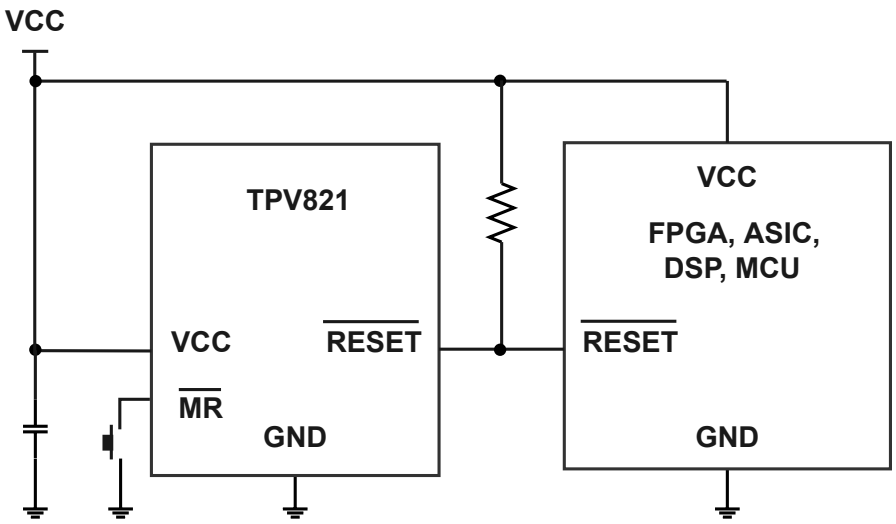

Figure 9. Typical ApplicationCircuit

Tape and Reel Information

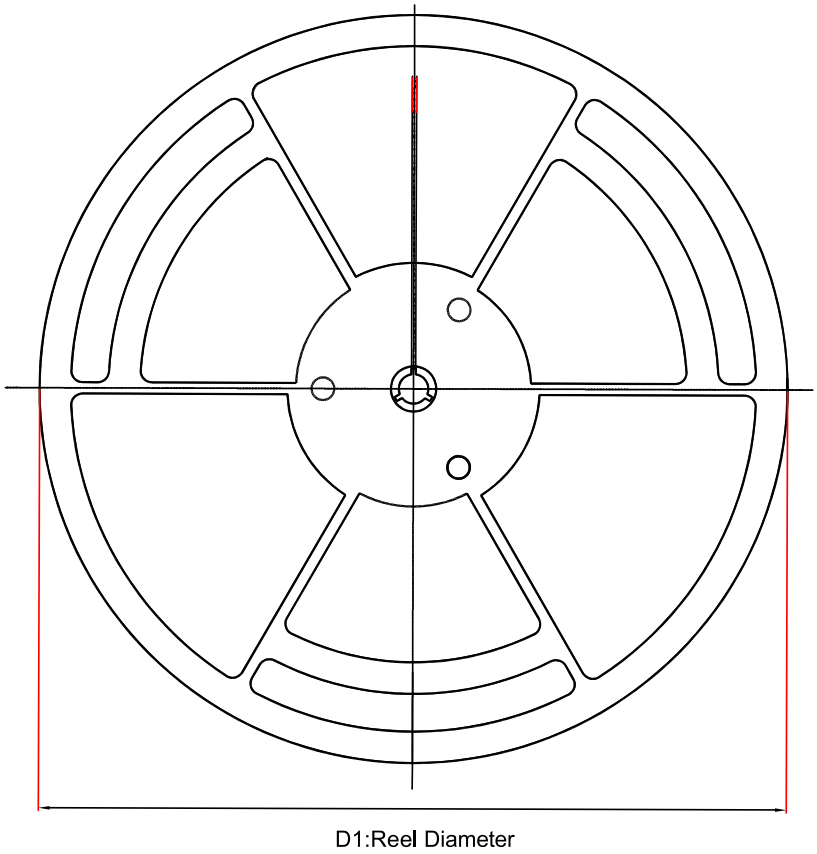

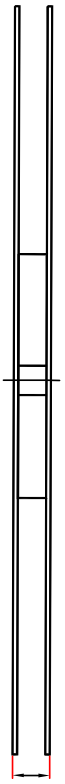

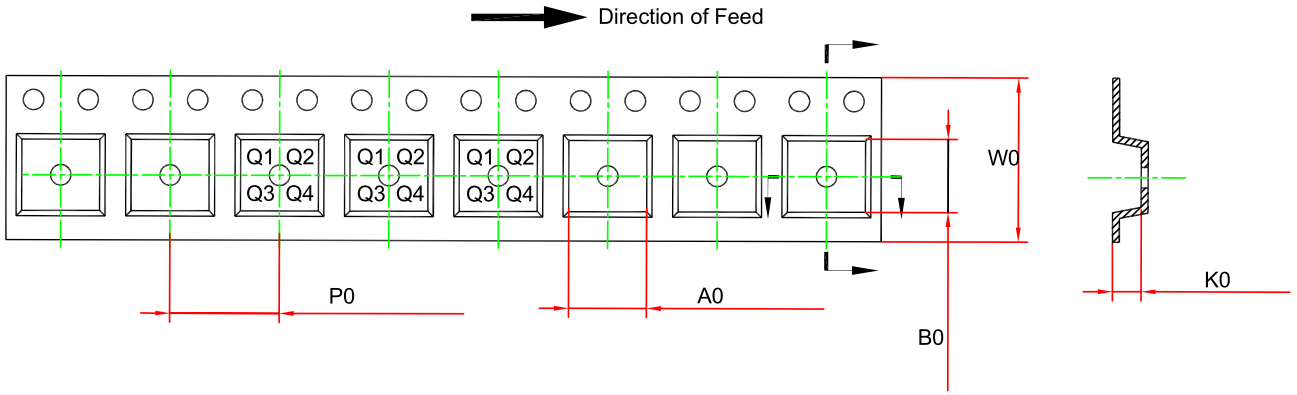

Order Number	Package	D1 (mm)	W1 (mm)	A0 (mm)	B0 (mm)	K0 (mm)	P0 (mm)	W0 (mm)	Pin1 Quadrant
TPV821x-5TR	SOT23-5	180	12	3.3	3.25	1.4	4	8	Q3
TPV821x-4LTR	SOT-143	180	13.1	3.19	2.8	1.31	4	8	Q3

Package Outline Dimensions

SOT23-5

Package Outline Dimensions S5T(SOT23-5-A)

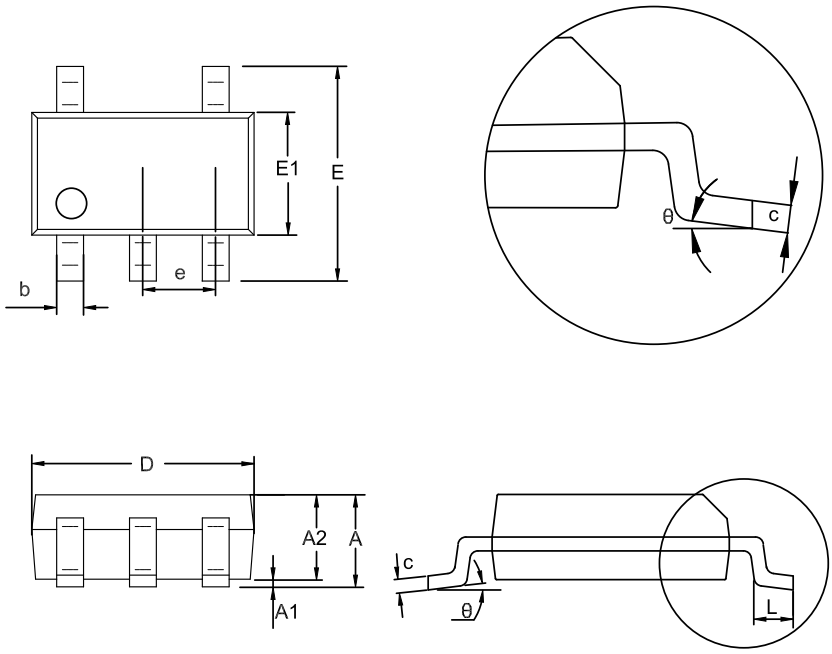

Symbol	Dimensions In Millimeters		Dimensions In Inches	
	MIN	MAX	MIN	MAX
A	1.050	1.250	0.041	0.049
A1	0.000	0.150	0.000	0.006
A2	1.000	1.200	0.039	0.047
b	0.280	0.500	0.011	0.020
c	0.100	0.230	0.004	0.009
D	2.820	3.020	0.111	0.119
E	2.600	3.000	0.102	0.118
E1	1.500	1.720	0.059	0.068
e	0.950 BSC		0.037 BSC	
L	0.300	0.600	0.012	0.024
θ	0	8°	0	8°

NOTES

1. Do not include mold flash or protrusion.
2. This drawing is subject to change without notice.

SOT143-4

Package Outline Dimensions 4LT(SOT143-4-A)

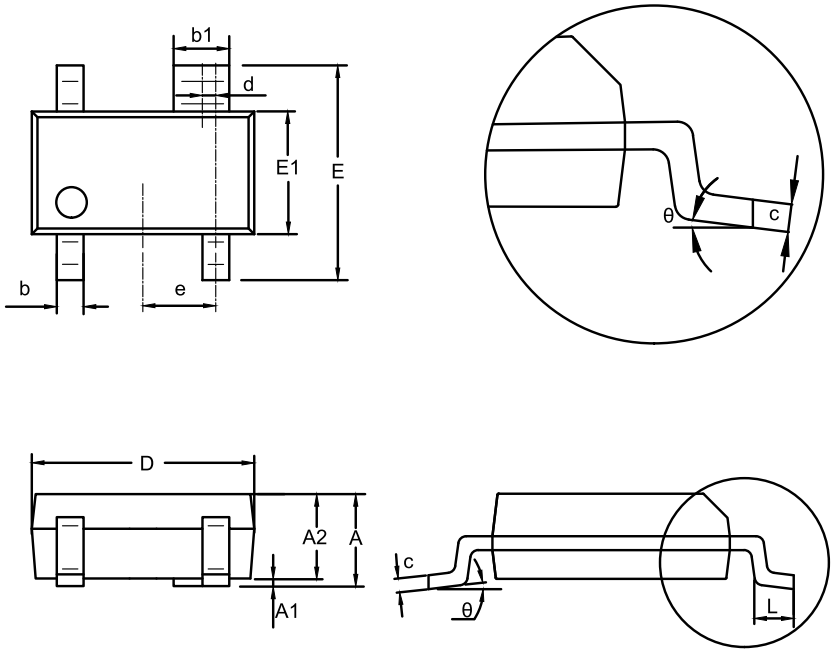

Symbol	Dimensions In Millimeters		Dimensions In Inches	
	MIN	MAX	MIN	MAX
A	0.900	1.150	0.035	0.045
A1	0.000	0.100	0.000	0.004
A2	0.900	1.050	0.035	0.041
b	0.300	0.500	0.012	0.020
b1	0.750	0.900	0.030	0.035
d	0.200 TYP		0.008 TYP	
c	0.008	0.160	0.003	0.006
D	2.800	3.000	0.110	0.118
E	2.250	2.550	0.089	0.100
E1	1.200	1.400	0.047	0.055
e	0.950 BSC		0.037 BSC	
L	0.300	0.500	0.012	0.020
θ	0	8°	0	8°

NOTES

1. Do not include mold flash or protrusion.
2. This drawing is subject to change without notice.

Order Information

Order Number	Operating Temperature Range	Package	Marking Information	MSL	Transport Media, Quantity	Eco Plan
TPV821V-5TR (1)	-40℃ to 125℃	SOT-23-5	V9V	MSL3	Tape and Reel, 3,000	Green
TPV821W-5TR (1)	-40℃ to 125℃	SOT-23-5	V9W	MSL3	Tape and Reel, 3,000	Green
TPV821Y-5TR (1)	-40℃ to 125℃	SOT-23-5	V9Y	MSL3	Tape and Reel, 3,000	Green
TPV821Z-5TR (1)	-40℃ to 125℃	SOT-23-5	V9Z	MSL3	Tape and Reel, 3,000	Green
TPV821R-5TR (1)	-40℃ to 125℃	SOT-23-5	V9R	MSL3	Tape and Reel, 3,000	Green
TPV821S-5TR (1)	-40℃ to 125℃	SOT-23-5	V9S	MSL3	Tape and Reel, 3,000	Green
TPV821T-5TR (1)	-40℃ to 125℃	SOT-23-5	V9T	MSL3	Tape and Reel, 3,000	Green
TPV821M-5TR(1)	-40℃ to 125℃	SOT-23-5	V9M	MSL3	Tape and Reel, 3,000	Green
TPV821L-5TR (1)	-40℃ to 125℃	SOT-23-5	V9L	MSL3	Tape and Reel, 3,000	Green
TPV821V-4LTR (1)	-40℃ to 125℃	SOT-143	V9V	MSL3	Tape and Reel, 3,000	Green
TPV821W-4LTR (1)	-40℃ to 125℃	SOT-143	V9W	MSL3	Tape and Reel, 3,000	Green
TPV821Y-4LTR (1)	-40℃ to 125℃	SOT-143	V9Y	MSL3	Tape and Reel, 3,000	Green
TPV821Z-4LTR (1)	-40℃ to 125℃	SOT-143	V9Z	MSL3	Tape and Reel, 3,000	Green
TPV821R-4LTR	-40℃ to 125℃	SOT-143	V9R	MSL3	Tape and Reel, 3,000	Green
TPV821S-4LTR (1)	-40℃ to 125℃	SOT-143	V9S	MSL3	Tape and Reel, 3,000	Green
TPV821T-4LTR (1)	-40℃ to 125℃	SOT-143	V9T	MSL3	Tape and Reel, 3,000	Green
TPV821M-4LTR (1)	-40℃ to 125℃	SOT-143	V9M	MSL3	Tape and Reel, 3,000	Green
TPV821L-4LTR (1)	-40℃ to 125℃	SOT-143	V9L	MSL3	Tape and Reel, 3,000	Green

(1) For future products, contact the 3PEAK for more information and samples.

Green: 3PEAK defines "Green" to mean RoHS compatible and free of halogen substances.

IMPORTANT NOTICE AND DISCLAIMER

Copyright© 3PEAK 2012-2024. All rights reserved.

Trademarks. Any of the 思瑞浦 or 3PEAK trade names, trademarks, graphic marks, and domain names contained in this document /material are the property of 3PEAK. You may NOT reproduce, modify, publish, transmit or distribute any Trademark without the prior written consent of 3PEAK.

Performance Information. Performance tests or performance range contained in this document/material are either results of design simulation or actual tests conducted under designated testing environment. Any variation in testing environment or simulation environment, including but not limited to testing method, testing process or testing temperature, may affect actual performance of the product.

Disclaimer. 3PEAK provides technical and reliability data (including data sheets), design resources (including reference designs), application or other design recommendations, networking tools, security information and other resources "As Is". 3PEAK makes no warranty as to the absence of defects, and makes no warranties of any kind, express or implied, including without limitation, implied warranties as to merchantability, fitness for a particular purpose or non-infringement of any third-party's intellectual property rights. Unless otherwise specified in writing, products supplied by 3PEAK are not designed to be used in any life-threatening scenarios, including critical medical applications, automotive safety-critical systems, aviation, aerospace, or any situations where failure could result in bodily harm, loss of life, or significant property damage. 3PEAK disclaims all liability for any such unauthorized use.