Issue date Jan. 12. 2010

Specification
No. G100510B0012Z1 — 1 to 13

Meer Technology Company Limited

Electrolytic Capacitors
Specifications

Customer Part No. :

Customer Specification No. :

Nippon Chemi-Con Part No. : ALCHIP MZA

Nippon Chemi-Con Corporation

Chemi-Con Miyagi Corporation

Design Group Manager

H. Yokoyama

Hiroyuki Yokoyama

Receipt Stamp

Change history of specifications

Specifications No.	Revision date	Pages/section revised	Changes made	Reasons for changes
G100510B0012Z1	Jan.12.2010	—	First issue	—

1 Scope

This specification defines the requirements for surface mount aluminum electrolytic capacitors MZA series.

2 Part Numbering System

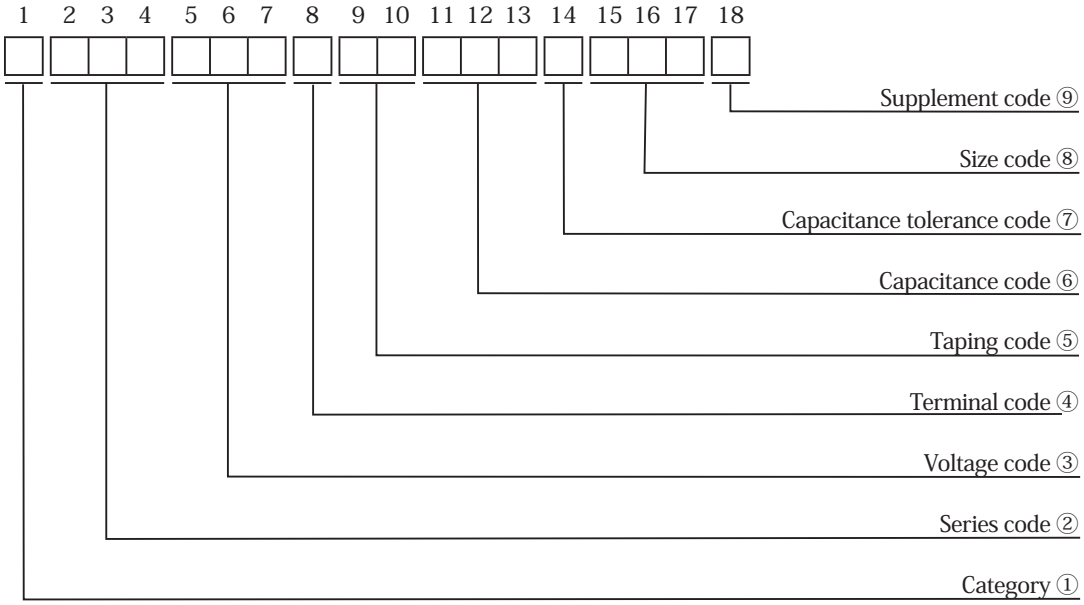

① Category

Category	Code
	1st
Polar	E

② Series code

Series name	Series code		
	2nd	3rd	4th
MZA	M	Z	A

③ Voltage code

Voltage [V]	Voltage code		
	5th	6th	7th
6.3	6	R	3
10	1	0	0
16	1	6	0
25	2	5	0
35	3	5	0
50	5	0	0
63	6	3	0
80	8	0	0

④ Terminal code

Type	Terminal code
	8th
No dummy terminal	A

⑤ Taping code

Taping type	Reel dia. ϕ [mm]	Taping code	
		9th	10th
Reel(Cardboard)	380	D	A

⑥ Capacitance code

Capacitance [μ F]	Capacitance code		
	11th	12th	13th
3.3	3	R	3
4.7	4	R	7
10	1	0	0
22	2	2	0
33	3	3	0
47	4	7	0
68	6	8	0
100	1	0	1
220	2	2	1
330	3	3	1
470	4	7	1
680	6	8	1
1000	1	0	2
1500	1	5	2

⑦ Capacitance tolerance code

Capacitance tolerance [%]	Capacitance tolerance code
	14th
$\pm$ 20	M

⑧ Size code

ϕ D [mm]	Size code
	15th
4	D
5	E
6.3	F
8	H
10	J

L [mm]	Size code	
	16th	17th
5.8	6	1
7.7	8	0
10	A	0

⑨ Supplement code

Terminal plating material	Supplement code
	18th
Sn-Bi	G

3 Appearance and dimensions

3.1 Dimension

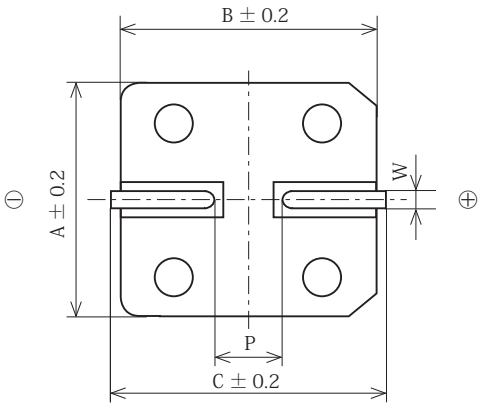

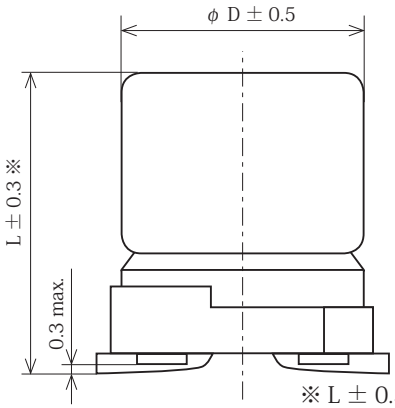

※ L ± 0.5 for HA0 and JA0.

Dimensions [mm]

Size code	ϕ D	L	A	B	C	W	P
D61	4	5.8	4.3	4.3	5.1	0.5 to 0.8	1.0
E61	5	5.8	5.3	5.3	5.9	0.5 to 0.8	1.4
F61	6.3	5.8	6.6	6.6	7.2	0.5 to 0.8	1.9
F80	6.3	7.7	6.6	6.6	7.2	0.5 to 0.8	1.9
HA0	8	10.0	8.3	8.3	9.0	0.7 to 1.1	3.1
JA0	10	10.0	10.3	10.3	11.0	0.7 to 1.1	4.5

3.2 Recommended solder land on PC board

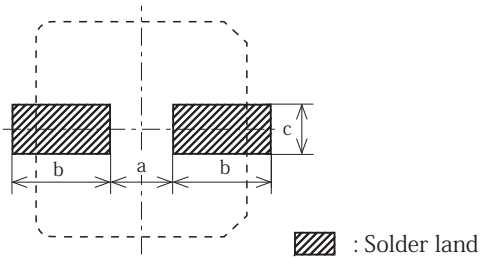

Land dimensions [mm]

Size code	a	b	c
D61	1.0	2.6	1.6
E61	1.4	3.0	1.6
F61	1.9	3.5	1.6
F80	1.9	3.5	1.6
HA0	3.1	4.2	2.2
JA0	4.5	4.4	2.2

4 Construction

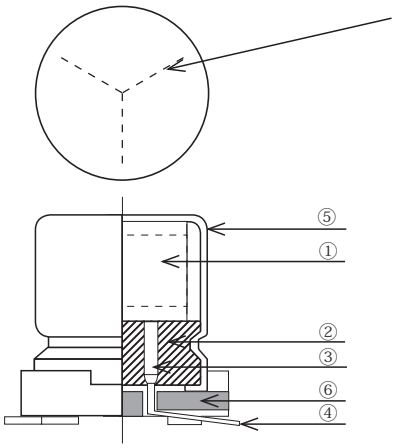

No.	Compositions		Materials
①	Element	Anode foil	Aluminum
		Cathode foil	Aluminum
		Separator	Paper
		Fixing tape	Adhesive tape (PP or PPS)
②	Seal		Rubber(IIR)
③	Aluminum tab		Aluminum
④	Lead wire		Bismuth-containing tinned copper clad steel
⑤	Case		Resin-coated aluminum
⑥	Base plate		Resin

※ No ozone depleting substance has been used.
RoHS Directive (2002/95/EC)
Substances banned in the RoHS directive are not uesd in these products.

5 Rating and characteristics

No.	Item	Specification
1	Category temperature range	− 55 to + 105℃
2	Rated voltage range	6.3 to 80 V_{DC}
3	Surge voltage	See Table-1
4	Rated capacitance range	See the standard rating table
5	Capacitance tolerance	− 20 to + 20%
6	Dissipation factor (tan δ)	See the standard rating table
7	Leakage current	See the standard rating table
8	Rated ripple current	See the standard rating table
9	Impedance	See the standard rating table

Table-1 Surge voltage

Rated voltage [V_{DC}]	6.3	10	16	25	35	50	63	80
Surge voltage [V_{DC}]	7.2	12	18	29	40	58	72	92

6 Marking

(Example)

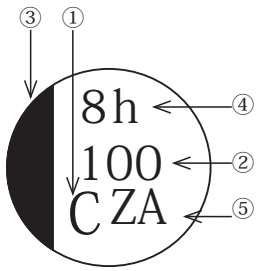

The following items shall be marked on each capacitor.
① Rated voltage (Symbol)
② Rated capacitance
③ Negative polarity marking
④ Lot No.
⑤ Series code「ZA」

Rated voltage symbol

Rated voltage [V_{DC}]	6.3	10	16	25	35	50	63	80
Symbol	j	A	C	E	V	H	J	K

7 Performance

Unless otherwise specified, the capacitors shall be measured at a temperature of + 15 to + 35℃ , a humidity of 45 to 75% RH and a atmospheric pressure of 86 to 106kPa. However, if any doubt arises on the judgment, the measurement conditions shall be + 20 ± 2℃ , 60 to 70% RH and 86 to 106kpa.

7.1 Leakage current (L.C.)

〔Conditions〕 Rated voltage shall be applied to capacitors in series with a resistor of 1000 ± 10 Ω . Then, leakage current shall be measured at the end of a specified period after the capacitors reached the rated voltage across the terminals.

〔Criteria〕 Shall not exceed the values specified in the table of Standard Ratings.

7.2 Capacitance (Cap.)

〔Conditions〕 Measuring frequency : 120Hz ± 20%
Measuring voltage : 0.5V rms max. + 1.5 to 2.0V_{DC}
Measuring circuit : Series equivalent circuit (○—⊣⊢—⩘—○)

〔Criteria〕 Shall be within the specified capacitance tolerance.

7.3 Dissipation factor (tan δ)

〔Conditions〕 Measuring frequency : 120Hz ± 20%
Measuring voltage : 0.5V rms max.+ 1.5 to 2.0V_{DC}
Measuring circuit : Series equivalent circuit (○—⊣⊢—⩘—○)

〔Criteria〕 Shall not exceed the values specified in the table of Standard Ratings.

7.4 Impedance

〔Conditions〕 Measuring frequency : 100kHz ± 10%
Measuring voltage : 0.5V rms max.

〔Criteria〕 Shall not exceed the values specified in the table of Standard Ratings.

7.5 Soldering heat

〔Conditions〕 The capacitor shall be soldered according to recommended reflow soldering conditions, and then restored at + 20℃ for the measurements.

〔Criteria〕 Appearance : No significant damage, legible marking no leakage of electrolyte.
Leakage current : Shall not exceed the initial specified value.
Capacitance change : Shall be within ± 10% of the initial measured value.
: Shall be within ± 15% of the initial measured value.
(Rated voltage : 10V_{DC} max.)
Tan δ : Shall not exceed the initial specified value.

SOLDERING METHODS AND THEIR RECOMMENDED CONDITIONS (Air reflow or Infrared reflow)

The following conditions are recommended for air or infrared reflow soldering of the surface mount capacitors onto a glass epoxy circuit board of $90^{L} \times 50^{W} \times 0.8^{t}$mm (With resist) by cream solder. The shown temperatures are the surface temperature values on the top of the can and on the capacitor terminal.

Reflow should be performent twice or less.

Please ensure that the capacitor became cold enough to the room temperature (5 to 35℃) before the second reflow.

《REFLOW TEMPERATURE PROFILE》

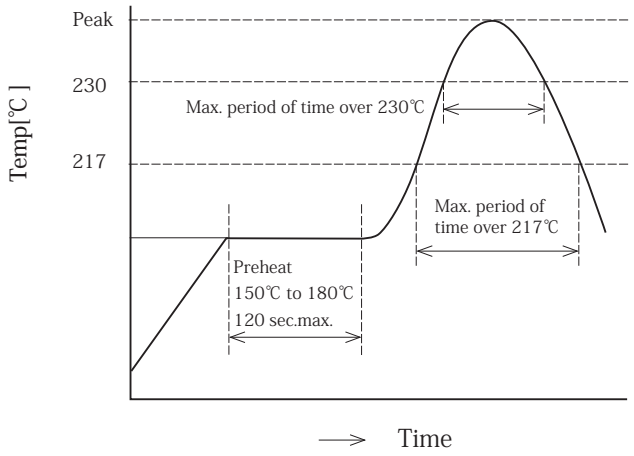

《Reflow Conditions》

The soldering shall be done by the following condition.

【D61 to F80】6.3 to 50V

Peak temperature	260℃ max.
Time maintained above 230℃	60 sec.max.
Time maintained above 217℃	90 sec.max.

【E61 to F80】63 to 80V

Peak temperature	250℃ max.
Time maintained above 230℃	40 sec.max.
Time maintained above 217℃	60 sec.max.

【HA0 to JA0】6.3 to 50V

Peak temperature	245℃ max.
Time maintained above 230℃	30 sec.max.
Time maintained above 217℃	60 sec.max.

【HA0 to JA0】63 to 80V

Peak temperature	240℃ max.
Time maintained above 230℃	20 sec.max.
Time maintained above 217℃	30 sec.max.

7.6 Solderability

〔Conditions〕 Type of solder : Sn-3Ag-0.5Cu
Flux : Ethanol solution (25 wt.% rosin)
Solder temperature : + 245 ± 3℃
Immersion time : 2 to 3sec.

〔Criteria〕 Solder shall cover at least 3/4 of the lead surface immersed.

7.7 Adhesion

〔Conditions〕 A force of 5N shall be applied to the center of the plane parallel to the line connecting the centers of terminals and at right angles to the plane of a PC board, the direction of which shall be at right angles to the plane. The force shall be applied to the capacitor body gradually without any shock and kept for 10 ± 1 seconds.

〔Criteria〕 No visible damage.

7.8 Vibration

〔Conditions〕 Vibration frequency range : 10 to 55Hz
Amplitude or Acceleration : 0.75mm (Half amplitude) or $98m/s^2$ (Whichever is less severe)
Sweep rate : 10 to 55 to 10Hz in about 1 minute
Direction and period of motion : 2 hours in each of 3 mutually perpendicular directions (total of 6 hours)

〔Criteria〕 Appearance : No significant damage, legible marking, and no electrolyte leakage.
Capacitance change : Shall be within ± 5% of the initial measured value.

7.9 Damp heat

〔Conditions〕 Test temperature : + 40 ± 2℃
Relative humidity : 90 to 95% RH
Test time : 240 ± 8 hours

〔Criteria〕 Appearance : No significant damage, legible marking, and no electrolyte leakage.
Leakage current : Shall not exceed the initial specified value.
Capacitance change : Shall be within ± 20% of the initial measured value.
Tan δ : Shall not exceed 120% of the initial specified value.

7.10 High and Low Temperature characteristics

〔Conditions〕

Step	Temperature[℃]
1	＋ 20 ± 2
2	− 25 ± 3, − 40 ± 3, − 55 ± 3
3	＋ 105 ± 2

Step1 : Measure capacitance, tan δ , a leakage currentand and impedance.
2 : Measure impedance.
3 : Measure capacitance, tan δ and a leakage current.

〔Criteria〕 Step 2 : Impedance ratio・・・Shall not exceed the values shown in the table below.

[120Hz]

Rated voltage[V_{DC}]	6.3	10	16	25	35	50	63	80
$Z_{-25℃}/Z_{+20℃}$	2	2	2	2	2	2	2	2
$Z_{-40℃}/Z_{+20℃}$	3	3	3	3	3	3	3	3
$Z_{-55℃}/Z_{+20℃}$	4	4	4	3	3	3	3	3

Step 3 : Leakage current・・・・・・Shall not increase 8 times more than the initial specified value
Capacitance change・・・・Shall be within ± 25% of the initial measured value.
Tan δ・・・・・・・・・・・・Shall not exceed the initial specified value.

7.11 Surge voltage test

〔Conditions〕 Test temperature : ＋ 15 to ＋ 35℃
Series protective resistor : Resistance value of RC=0.1 ± 0.05 s
Test voltage : Surge voltage shown in Table-1
Applying of voltage : 30 seconds of charge time and 5 minutes 30 seconds discharge time.
Test cycle : 1000 cycles
(Note) This test is specified for an over-voltage which is unusually applied for a short period of time, not supposing that the voltage is applied all the time.

〔Criteria〕 Appearance : No significant damage and no electrolyte leakage.
Leakage current : Shall not exceed the initial specified value.
Capacitance change : Shall be within ± 20% of the initial measured value.
Tan δ : Shall not exceed 200% of the initial specified value.

7.12 Endurance

〔Conditions〕 The following specifications shall be satisfied when the capacitors are restored to 20℃ after the rated voltage is applied for 2,000 $^{+72}_{0}$ hours at ＋ 105 ± 2℃ .

〔Criteria〕 Appearance : No significant damage, legible marking, and no electrolyte leakage.
Leakage current : Shall not exceed the initial specified value.
Capacitance change : Shall be within ± 30% of the initial measured value.
Tan δ : Shall not exceed 200% of the initial specified value.

7.13 High temperature storage

〔Conditions〕 The following specifications shall be satisfied when the capacitors are restored to 20℃ after exposing them for 1,000 $^{+48}_{0}$ hours at ＋ 105 ± 2℃ with voltage applied. Before the measurements, the capacitor shall be preconditioned by applying voltage according to Item 4.1 of JIS C 5104-4.

〔Criteria〕 Appearance : No significant damage, legible marking, and no electrolyte leakage.
Leakage current : Shall not exceed the initial specified value.
Capacitance change : Shall be within ± 30% of the initial measured value.
Tan δ : Shall not exceed 200% of the initial specified value.

7.14 Pressure relief vent (Apply to only JA0 size code)

〔Conditions〕 Apply a reverse voltage with the DC current of 1 amp.(DC reverse voltage test)

〔Criteria〕 When the pressure relief vent operated, the capacitor shall not flame although gas generation or expulsion of a part of the inside element is allowable. If the vent does not operate with the voltage applied for 30 minutes, the test is considered to be passed.

8 Reference standard

MZA series is applicable to chip capacitors of JIS C 5101-18-2(1999).
The others test conditions shall comply with JIS C 5101-18-2 and JIS C 5101-1 1998.

9 Others

9.1 Export Trade Control Ordinance (To be complied for aluminum electrolytic capacitors be exported from Japan)

(1) Export Trade Control Ordinance (Section 1 through 15 of Appendix Table 1)

Export regulation of the capacitors for pulse use (750V or higher) and the capacitors for high voltage (5,000V or higher) is carried out according to (item 41-4) in Section 2 of Appendix Table 1 (Section 49 in Chapter 1 of METI's Ordinance) and (item 7) in Section 7 of Appendix Table 1 (Section 6 in Chapter 6 of METI's Ordinance).
However, the aluminum electrolytic capacitors, which are described in this specification, don't fulfill the regulated level. Therefore, the aluminum electrolytic capacitors are not applicable to Export Trade Control Ordinance.

(2) Export Trade Control Ordinance (Section 16 of Appendix Table 1)

The aluminum electrolytic capacitors, which are described in this specification, applicable to goods under Export Regulations (Category 85 of Appendix Table in Customs Tariff Law) based on Section 16 of Appendix Table 1 in Export Trade Control Ordinance.
If the exporter got information that their exporting goods are used to any development of massive weapon, the exporter must apply for exporting permission to Ministry of Economy, Trade and Industry (METI), and get METI's approval.
Regardless of the above, if the exporter is notified by METI that his/her exporting goods are potentially used to any development of extensive destructive weapons, the exporter must seek permission from METI to export, and get METI's approval. When Nippon Chemi-Con receives such notice from METI, we will inform your company of that.

9.2 Cleaning PC board

(1) Alcohol system

Higher alcohol system / Isopropyl alcohol cleaning agents

Recommended cleaning agents:

Pine Alpha ST-100S (Arakawa Chemical)
Clean Through 750H, 750K, 750L, and 710M (Kao)
Technocare FRW-14,15,16,17 (Momentive performance materials)

Cleaning conditions:

Using these cleaning agents, capacitors are capable of withstanding immersion or ultrasonic cleaning for 10 minutes at a maximum liquid temperature of 60℃ . Find optimum conditions for washing, rinsing, and drying. Be sure not to rub off the marking of the capacitors by coming in contact with any other components or the PC board. Note that shower cleaning adversely affects the markings on the sleeve.
It is necessary to maintain a flux content in the cleaning liquid in of 2 Wt.% or less, and to control for alkaline components not to remain in the final cleaning process.

(2) Non-Halogenated Solvent Cleaning

Recommended cleaning agents:

AK225AES (Asahi Glass)

Cleaning conditions:

Solvent-resistant capacitors are capable of withstanding any one of immersion, ultrasonic or vapor cleaning for 5 minutes. However, from a view of the global environmental problems, these types of solvent will be banned in near future. We would recommend not using them as much as possible.

9.3 Manufacturing plant

CHEMI-CON MIYAGI CORPORATION (JAPAN)
P.T.INDONESIA CHEMI-CON (INDONESIA)
SAMYOUNG ELECTRONICS CO., LTD. (KOREA)
CHEMI-CON(WUXI)CO., LTD.(CHINA)

9.4 For aluminum electrolytic capacitors, please refer to PRECAUTIONS AND GUIDELINES.

10 Taping

10.1 Scope

This specification defines the taping requirements for aluminum electrolytic capacitors, complying with JIS C 0806-3(1999).

10.2 Taping dimensions and taping configurations

(1) Carrier tape

(Fig.1)

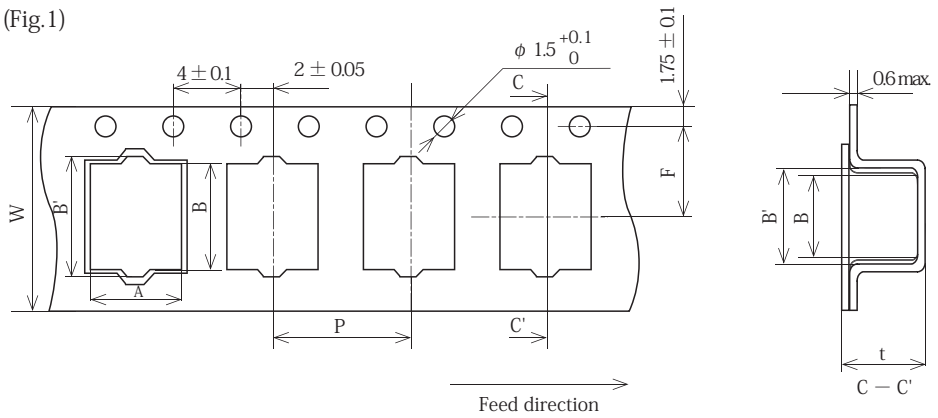

(Fig.2)

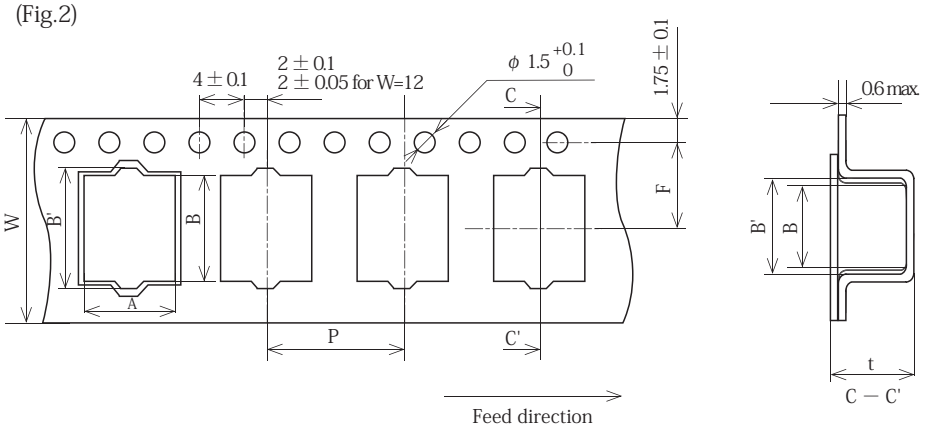

(Fig.3)

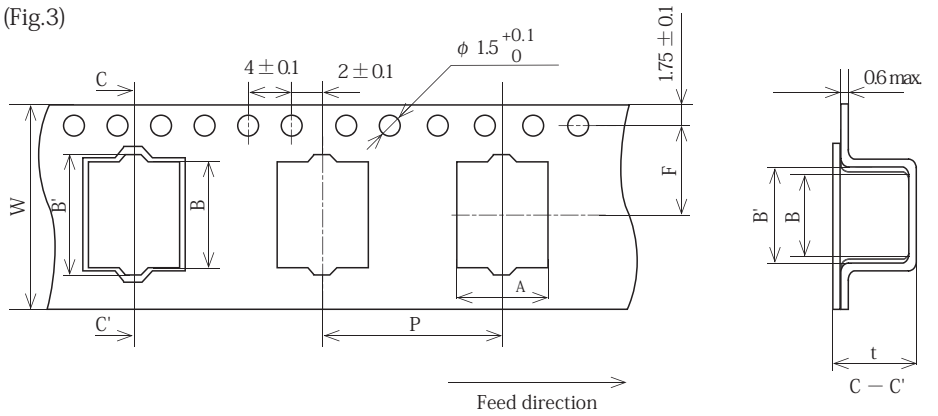

Carrier tape dimensions [mm]

Size code	Fig.	W ± 0.3	A ± 0.2	B ± 0.2	B' ± 0.2	F ± 0.1	P ± 0.1	t ± 0.2
D61	1	12.0	4.7	4.7	6.1	5.5	8.0	6.3
E61	2	12.0	5.7	5.7	6.9	5.5	12.0	6.3
F61	2	16.0	7.0	7.0	8.2	7.5	12.0	6.3
F80	2	16.0	7.0	7.0	8.2	7.5	12.0	8.2
HA0	3	24.0	8.7	8.7	9.9	11.5	16.0	11.0
JA0	3	24.0	10.7	10.7	11.9	11.5	16.0	11.0

(2) Edges of carrier tape and cover tape

The cover tape shall not extend more than 0.5mm beyond the edge of the carrier tape.

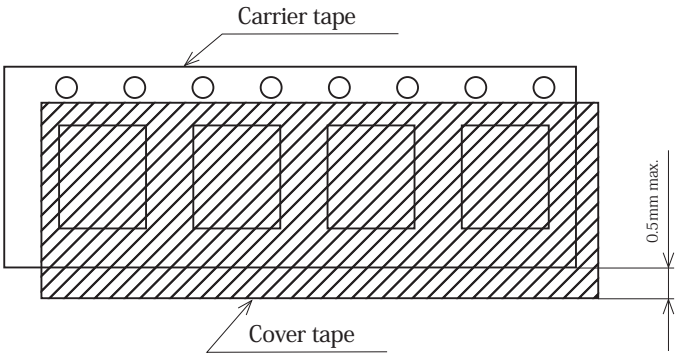

The cover tape shall not extend exceeding 0.75mm to the sprocket holes.

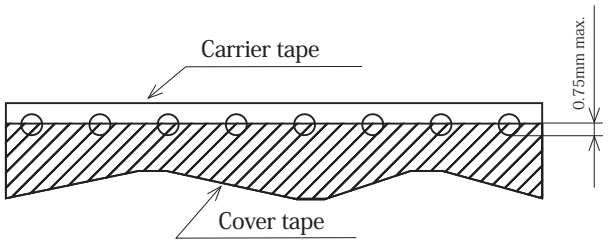

10.3 Taping method and polarity

(1) Polarity

The parts shall be so oriented that their positive polarity shall be the right side for the direction of unreeling.
(Except for bi-polarized capacitors)

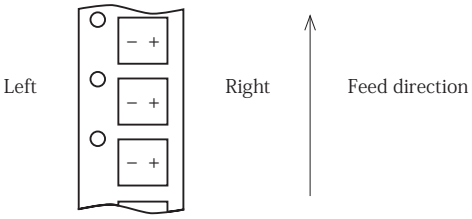

(2) Peeling strength of cover tape

1) Rupture strength of cover tape：10N min.

2) Peeling strength of cover tape

① Peeling angle：165 to 180° to adhesive surface

② Peel-off speed：300 ± 10 mm/minute

③ Peeing force：0.1N to 1.3N

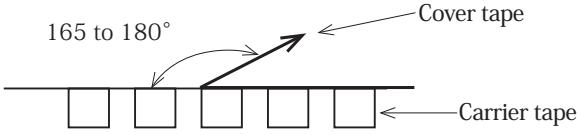

3) Other

When the cover tape is taken off and the carrier tape turned upside down, all of the parts shall fall out of the carrier tape.

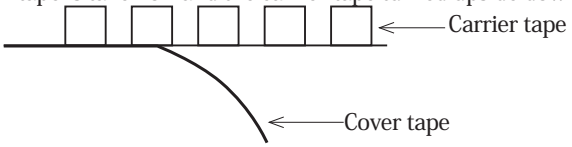

(3) Taping method and marking

1) Taping method is shown below.

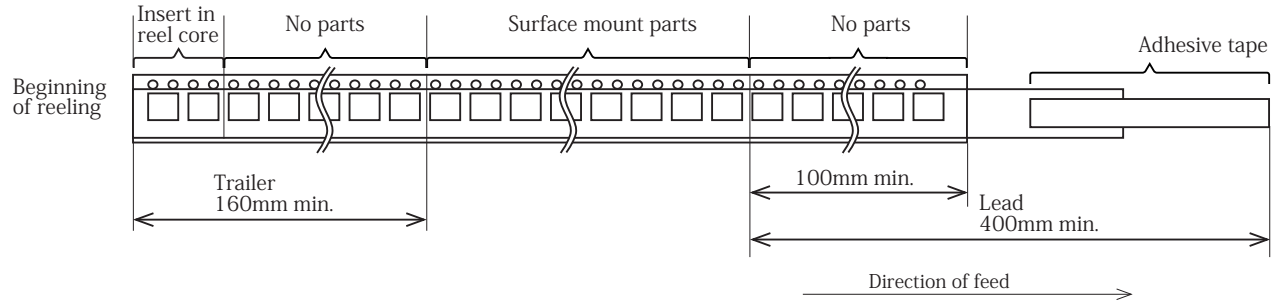

2) Marking of reel

The following marking shall be printed on the reel.

① Part Numbering System
② Lot No.
③ Manufacturer's name
④ Quantity

(4) Reel dimensions

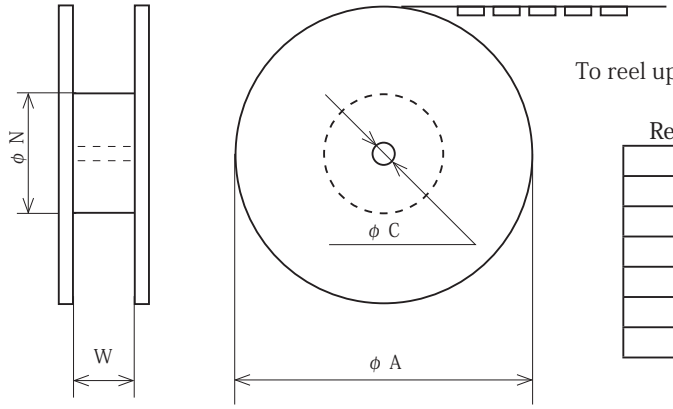

To reel up the tape so that the parts can face the reel core.

Reel dimensions [mm]

Size code	W	ϕ N min.	ϕ A max.	ϕ C ± 0.5
D61	14	50	382	13
E61	14	50		
F61	18	50		
F80	18	50		
HA0	26	50		
JA0	26	50		

10.4 Packaging quantity and Packaging box

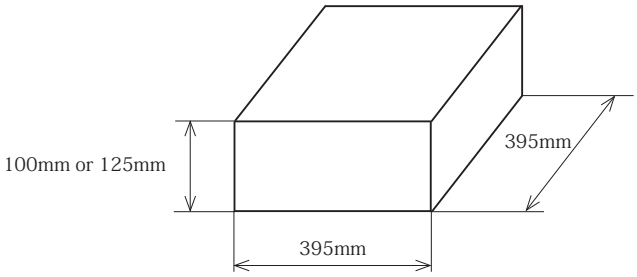

※ The dimensions may change according to the size of the reel.

Quantity per reel/box

Size code	Quantity		
	pcs/reel	pcs/box	reel/box
D61	2000	10000	5
E61	1000	5000	5
F61	1000	5000	5
F80	900	4500	5
HA0	500	1500	3
JA0	500	1500	3

This may change according to a delivered quantity.

10.5 Others

(1) Missing parts shall be no more than 0.1% of the total packaging quantity.
(2) Carrier tapes may be spliced and/or a part of cover tapes may be spliced with an adhesive tape, because of manufacturing reasons.

STANDARD RATINGS

WV [Vdc]	Cap [μ F]	Size code	tan δ Max.	LC [μ A] Max.	Impedance [Ω Max./100kHz]	Rated ripple current [mArms/105℃]	Part No.
				2minutes	20℃	100kHz	
6.3	22	D61	0.26	3.0	1.35	90	EMZA6R3ADA220MD61G
6.3	47	D61	0.26	3.0	1.35	90	EMZA6R3ADA470MD61G
6.3	47	E61	0.26	3.0	0.70	160	EMZA6R3ADA470ME61G
6.3	100	E61	0.26	6.3	0.70	160	EMZA6R3ADA101ME61G
6.3	100	F61	0.26	6.3	0.36	240	EMZA6R3ADA101MF61G
6.3	220	F61	0.26	13.8	0.36	240	EMZA6R3ADA221MF61G
6.3	330	F80	0.26	20.7	0.34	280	EMZA6R3ADA331MF80G
6.3	470	HA0	0.26	29.6	0.16	600	EMZA6R3ADA471MHA0G
6.3	1000	HA0	0.26	63.0	0.16	600	EMZA6R3ADA102MHA0G
6.3	1500	JA0	0.26	94.5	0.08	850	EMZA6R3ADA152MJA0G
10	22	D61	0.19	3.0	1.35	90	EMZA100ADA220MD61G
10	33	D61	0.19	3.3	1.35	90	EMZA100ADA330MD61G
10	33	E61	0.19	3.3	0.70	160	EMZA100ADA330ME61G
10	220	F80	0.19	22.0	0.34	280	EMZA100ADA221MF80G
10	330	HA0	0.19	33.0	0.16	600	EMZA100ADA331MHA0G
10	470	HA0	0.19	47.0	0.16	600	EMZA100ADA471MHA0G
10	680	HA0	0.19	68.0	0.16	600	EMZA100ADA681MHA0G
10	1000	JA0	0.19	100	0.08	850	EMZA100ADA102MJA0G
16	10	D61	0.16	3.0	1.35	90	EMZA160ADA100MD61G
16	22	D61	0.16	3.5	1.35	90	EMZA160ADA220MD61G
16	22	E61	0.16	3.5	0.70	160	EMZA160ADA220ME61G
16	47	E61	0.16	7.5	0.70	160	EMZA160ADA470ME61G
16	47	F61	0.16	7.5	0.36	240	EMZA160ADA470MF61G
16	100	F61	0.16	16.0	0.36	240	EMZA160ADA101MF61G
16	220	F80	0.16	35.2	0.34	280	EMZA160ADA221MF80G
16	330	HA0	0.16	52.8	0.16	600	EMZA160ADA331MHA0G
16	470	HA0	0.16	75.2	0.16	600	EMZA160ADA471MHA0G
16	680	JA0	0.16	108	0.08	850	EMZA160ADA681MJA0G
25	10	D61	0.14	3.0	1.35	90	EMZA250ADA100MD61G
25	22	E61	0.14	5.5	0.70	160	EMZA250ADA220ME61G
25	33	E61	0.14	8.2	0.70	160	EMZA250ADA330ME61G
25	33	F61	0.14	8.2	0.36	240	EMZA250ADA330MF61G
25	47	F61	0.14	11.7	0.36	240	EMZA250ADA470MF61G
25	100	F80	0.14	25.0	0.34	280	EMZA250ADA101MF80G
25	220	HA0	0.14	55.0	0.16	600	EMZA250ADA221MHA0G
25	330	HA0	0.14	82.5	0.16	600	EMZA250ADA331MHA0G
25	470	JA0	0.14	117	0.08	850	EMZA250ADA471MJA0G
35	4.7	D61	0.12	3.0	1.35	90	EMZA350ADA4R7MD61G
35	10	D61	0.12	3.5	1.35	90	EMZA350ADA100MD61G
35	10	E61	0.12	3.5	0.70	160	EMZA350ADA100ME61G
35	22	E61	0.12	7.7	0.70	160	EMZA350ADA220ME61G
35	33	F61	0.12	11.5	0.36	240	EMZA350ADA330MF61G
35	47	F61	0.12	16.4	0.36	240	EMZA350ADA470MF61G
35	100	F80	0.12	35.0	0.34	280	EMZA350ADA101MF80G
35	100	HA0	0.12	35.0	0.16	600	EMZA350ADA101MHA0G
35	220	HA0	0.12	77.0	0.16	600	EMZA350ADA221MHA0G
35	330	JA0	0.12	115	0.08	850	EMZA350ADA331MJA0G
50	4.7	D61	0.10	3.0	2.90	60	EMZA500ADA4R7MD61G
50	10	E61	0.10	5.0	1.52	85	EMZA500ADA100ME61G
50	10	F61	0.10	5.0	0.88	165	EMZA500ADA100MF61G
50	22	F61	0.10	11.0	0.88	165	EMZA500ADA220MF61G
50	33	F80	0.10	16.5	0.68	195	EMZA500ADA330MF80G
50	47	FA0	0.10	23.5	0.68	195	EMZA500ADA470MFA0G
50	100	HA0	0.10	50.0	0.34	350	EMZA500ADA101MHA0G
50	220	JA0	0.10	110	0.18	670	EMZA500ADA221MJA0G
63	4.7	E61	0.08	3.0	4.8	50	EMZA630ADA4R7ME61G
63	10	F61	0.08	6.3	2.2	80	EMZA630ADA100MF61G
63	22	F80	0.08	13.8	2.1	120	EMZA630ADA220MF80G
63	33	HA0	0.08	20.7	0.70	250	EMZA630ADA330MHA0G
63	47	HA0	0.08	29.6	0.70	250	EMZA630ADA470MHA0G
63	68	HA0	0.08	42.8	0.70	250	EMZA630ADA680MHA0G

STANDARD RATINGS

WV [Vdc]	Cap [μ F]	Size code	tan δ Max.	LC [μ A] Max.	Impedance [Ω Max./100kHz]	Rated ripple current [mArms/105℃]	Part No.
				2minutes	20℃	100kHz	
63	100	JA0	0.08	63.0	0.45	400	EMZA630ADA101MJA0G
80	3.3	E61	0.08	3.0	5.0	25	EMZA800ADA3R3ME61G
80	4.7	F61	0.08	3.7	3.0	40	EMZA800ADA4R7MF61G
80	10	F80	0.08	8.0	2.4	60	EMZA800ADA100MF80G
80	22	HA0	0.08	17.6	1.3	130	EMZA800ADA220MHA0G
80	33	HA0	0.08	26.4	1.3	130	EMZA800ADA330MHA0G
80	47	JA0	0.08	37.6	0.70	200	EMZA800ADA470MJA0G

PRECAUTIONS AND GUIDELINES(Aluminum Electrolytic Capacitors)

Designing Device Circuits

【1】 Select the capacitors to suit installation and operating conditions, and use the capacitors to meet the performance limits prescribed in this catalog or the product specifications.

【2】 Polarity

Aluminum Electrolytic Capacitors are polarized. Apply neither reverse voltage nor AC voltage to polarized capacitors. Using reversed polarity causes a short circuit or venting. Before use, refer to the catalog, product specifications or capacitor body to identify the polarity marking. (The shape of rubber seal does not represent the directional rule for polarity.) Use a bi-polar type of non-solid aluminum electrolytic capacitor for a circuit where the polarity is occasionally reversed. However, note that even a bi-polar aluminum electrolytic capacitor must not be used for AC voltage applications.

【3】 Operating voltage

Do not apply a DC voltage which exceeds the full rated voltage. The peak voltage of a superimposed AC voltage (ripple voltage) on the DC voltage must not exceed the full rated voltage. A surge voltage value, which exceeds the full rated voltage, is prescribed in the catalogs, but it is a restricted condition, for especially short periods of time.

【4】 Ripple current

The rated ripple current has been specified at a certain ripple frequency. The rated ripple current at several frequencies must be calculated by multiplying the rated ripple current at the original frequency using the frequency multipliers for each product series. For more details, refer to the paragraph on Aluminum Electrolytic Capacitor Life.

【5】 Category temperature

The use of a capacitor outside the maximum rated category temperature will considerably shorten the life or cause the capacitor to vent. The relation between the lifetime of aluminum electrolytic capacitors and ambient temperature follows Arrhenius' rule that the lifetime is approximately halved with each 10℃ rise in ambient temperature.

【6】 Life expectancy

Select the capacitors to meet the service life of a device.

【7】 Charge and discharge

Do not use capacitors in circuits where heavy charge and discharge cycles are frequently repeated. Frequent and sharp heavy discharging cycles will result in decreasing capacitance and damage to the capacitors due to generated heat. Specified capacitors can be designed to meet the requirements of charging-discharging cycles, frequency, operating temperature, etc.

【8】 Failure mode of capacitors

Non-solid aluminum electrolytic capacitors, in general, have a lifetime which ends in an open circuit, but depending on conditions of usage or products type, failure mode of capacitors will be venting. Please contact a representative of Nippon Chemi-Con.

【9】 Insulating

a) Electrically isolate the following parts of a capacitor from the negative terminal, the positive terminal and the circuit traces.
   - The outer can case of a non-solid aluminum capacitor.
   - The dummy terminal of a non-solid aluminum capacitor, which is designed for mounting stability.

b) The outer sleeve of a capacitor is not assured as an insulator (Except for screw type).

【10】 Condition

Do not use/expose capacitors to the following conditions.

a) Oil, water, salty water storage in damp locations.

b) Direct sunlight

c) Toxic gases such as hydrogen sulfide, sulfurous acid, nitrous acid, chlorine or its compounds, and ammonium.

d) Ozone, ultraviolet rays or radiation

e) Severe vibration or mechanical shock conditions beyond the limits prescribed in the catalogs or the product specification.

【11】 Mounting

a) The paper separators and the electrolytic-conductive electrolytes in a non-solid aluminum electrolytic capacitor are flammable. Leaking electrolyte on a printed circuit board can gradually erode the copper traces, possibly causing smoke or burning by short-circuiting the copper traces. Verify the following points when designing a PC board.
   - Provide the appropriate hole spacing on the PC board to match the terminal spacing of the capacitor.
   - Make the following open space over the vent so that the vent can operate correctly.

Case diameter	Clearance
φ 6.3 to φ 16mm	2mm minimum
φ 18 to φ 35mm	3mm minimum
φ 40mm and up	5mm minimum

   - Do not place any wires or copper traces over the vent of the capacitor.
   - Installing a capacitor with the vent facing the PC board needs an appropriate ventilation hole in PC board.
   - Do not pass any copper traces beneath the seal side of a capacitor. The trace must pass 1 or 2mm to the side of the capacitor.
   - Avoid placing any heat-generating objects adjacent to a capacitor or even on the reverse side of the PC board.

・Do not pass any via holes underneath a capacitor.
・In designing double-sided PC boards, do not locate any copper trace under the seal side of a capacitor.

b) Do not mount the terminal side of a screw mount capacitor downwards. If a screw terminal capacitor is mounted on its side, make sure the positive terminal is higher than the negative terminal. Do not tighten the screws of the terminals and the mounting clamps over the specified torque prescribed in the catalog or the production specification.

c) For a surface mount capacitor, design the copper pads of the PC board in accordance with the catalog or the product specifications.

【12】Others

a) The electrical characteristics of capacitors vary in respect to temperature, frequency and service life. Design the device circuits by taking these changes into account.

b) Capacitors mounted in parallel need the current to flow equally through the individual capacitors.

c) Capacitors mounted in series require resistors in parallel with the individual capacitors to balance the voltage.

d) Using capacitor for applications which always consider safety. Consult with our factory before use in applications which can affect human life.(space equipment, aerial equipment, nuclear equipment, medical equipment, vehicle control equipment, etc) Please note that the product, which is designed only for specific usage can not be used in other usages.(ex. Photo flash type, etc.)

Installing Capacitors

【1】Installing

a) Used capacitors are not reusable, except in the case that the capacitors are detached from a device for periodic inspection to measure their electrical characteristics.

b) If the capacitors have self charged, discharge in the capacitors through a resistor of approximately 1k Ω before use.

c) If capacitors are stored at a temperature of 35℃ or more and more than 75% RH, the leakage current may increase. In this case, they can be reformed by applying the rated voltage through a resistor of approximately 1k Ω .

d) Verify the rated capacitance and voltages of the capacitors when installing.

e) Verify the polarity of the capacitors.

f) Do not use the capacitors if they have been dropped on the floor.

g) Do not deform the cases of capacitors.

h) Verify that the lead spacing of the capacitor fits the hole spacing in the PC board before installing the capacitors.Some standard pre-formed leads are available.

i) For pin terminals or snap-in terminals, insert the terminals into PC board and press the capacitor downward until the bottom of the capacitor body reaches PC board surface.

j) Do not apply any mechanical force in excess of the limits prescribed in the catalogs or the product specifications of the capacitors. Also, note the capacitors may be damaged by mechanical shocks caused by the vacuum/insertion head, component checker or centering operation of an automatic mounting or insertion machine.

【2】Soldering and Solderability

a) When soldering with a soldering iron
・Soldering conditions (temperature and time) should be within the limits prescribed in the catalogs or the product specifications.
・If the terminal spacing of a capacitor does not fit the terminal hole spacing of the PC board, reform the terminals in a manner to minimize a mechanical stress into the body of the capacitor.
・Remove the capacitors from the PC board, after the solder is completely melted, reworking by using a soldering iron minimizes the mechanical stress to the capacitors.
・Do not touch the capacitor body with the hot tip of the soldering iron.

b) Flow soldering
・Do not dip the body of a capacitor into the solder bath only dip the terminals in. The soldering must be done on the reverse side of PC board.
・Soldering conditions (preheat, solder temperature and dipping time) should be within the limits prescribed in the catalogs or the product specifications.
・Do not apply flux to any part of capacitors other than their terminals.
・Make sure the capacitors do not come into contact with any other components while soldering.

c) Reflow soldering
・Soldering conditions (preheat, solder temperature and dipping time) should be within the limits prescribed in the catalogs or the product specifications.
・When setting the temperature infrared heaters, consider that the infrared absorption causes material to be discolored and change in appearance.
・Do not solder capacitors more than once using reflow. If you need to twice, be sure to consult with us.
・Make sure capacitors do not come into contact with copper traces.

d) Do not re-use surface mount capacitors which have already been soldered. In addition, when installing a new capacitor onto the assembly board to rework, remove old residual flux from the surface of the PC board, and then use a soldering iron within the prescribed conditions.

e) Confirm before running into soldering that the capacitors are for reflow soldering.

【3】 Handling after soldering

Do not apply any mechanical stress to the capacitor after soldering onto the PC board.

a) Do not lean or twist the body of the capacitor after soldering the capacitors onto the PC board.

b) Do not use the capacitors for lifting or carrying the assembly board.

c) Do not hit or poke the capacitor after soldering to PC board. When stacking the assembly board, be careful that other components do not touch the aluminum electrolytic capacitors.

d) Do not drop the assembly board.

【4】 Cleaning PC boards

a) Do not wash capacitors by using the following cleaning agents.
- Halogenated solvents; cause capacitors to fail due to corrosion.
- Alkali system solvents; corrode (dissolve) an aluminum case.
- Petroleum and terpene system solvents; cause the rubber seal material to deteriorate.
- Xylene; causes the rubber seal material to deteriorate.
- Acetone; erases the marking.

Solvent resistant capacitors are only suitable for washing using the cleaning conditions prescribed in the catalogs or the product specifications. In particular, ultrasonic cleaning will accelerate damaging capacitors.

b) Verify the following points when washing capacitors.
- Monitor conductivity, pH, specific gravity, and the water content of cleaning agents. Contamination adversely affects these characteristics.
- Be sure not to expose the capacitors under solvent rich conditions or keep capacitors inside a closed container. In addition, please dry the solvent sufficiently on the PC board and the capacitor with an air knife (temperature should be less than the maximum rated category temperature of the capacitor) over 10 minutes. Aluminum electrolytic capacitors can be characteristically and catastrophically damaged by halogen ions, particularly by chlorine ions, though the degree of the damage mainly depends upon the characteristics of the electrolyte and rubber seal material. When halogen ions come into contact with the capacitors, the foil corrodes when voltages applied. This corrsion causes ; extremely high leakage current, which causes in line with, venting, and an open circuit. Global environmental warnings (Greenhouse effects and other environmental destruction by depletion of the ozone layer), new types of cleaning agents have been developed and commercialized as substitutes for CFC-113,1,1,2-trichloroethlene and 1,1,1-trichloroethylene. The following are recommended as cleaning conditions for some of new cleaning agents.

-Higher alcohol system cleaning agents

Recommended cleaning agents:
Pine Alpha ST-100S (Arakawa Chemical)
Clean Through 750H, 750K, 750L, and 710M (Kao)
Technocare FRW-14,15,16,17 (Momentive performance materials)
Cleaning conditions:
Using these cleaning agents capacitors are capable of withstanding immersion or ultrasonic cleaning for 10 minutes at a maximum liquid temperature of 60℃ . Find optimum condition for washing, rinsing, and drying. Be sure not to rub the marking off the capacitor by contacting any other components or the PC board. Note that shower cleaning adversely affects the markings on the sleeve.

-Non-Halogenated Solvent Cleaning

AK225AES (Asahi Glass)
Cleaning conditions:
Solvent resistant capacitors are capable of withstanding any one of immersion, ultrasonic or vapor cleaning for 5 minutes; exception is 2 minutes max. for KRE, and KRE-BP series capacitors and 3 minutes for SRM series capacitors.However, from a view of the global environmental problems, these types of solvent will be banned in near future. We would recommended not using them as much as possible.

Isopropyl alcohol cleaning agents

IPA (Isopropyl Alcohol) is one of the most acceptable cleaning agents; it is necessary to maintain a flux content in the cleaning liquid at a maximum limit of 2 Wt.% .

【5】 Precautions for using adhesives and coating materials

a) Do not use any adhesive and coating materials containing halogenated solvent.

b) Verify the following before using adhesive and coating material.
- Remove flux and dust leftover between the rubber seal and the PC board before applying adhesive or coating materials to the capacitor.
- Dry and remove any residual cleaning agents before applying adhesive and coating materials to the capacitors. Do not cover over the whole surface of the rubber seal with the adhesive or coating materials.

・For permissible heat conditions for curing adhesives or coating materials, follow the instructions in the catalogs or the product specifications of the capacitors.
・Covering over the whole surface of the capacitor rubber seal with resin may result in a hazardous condition because the inside pressure cannot release completely. Also, a large amount of halogen ions in resins will cause the capacitors to fail because the halogen ions penetrate into the rubber seal and the inside of the capacitor.

c) Some of coating material cannot be curred over the capacitor. Please note that loose luster and whitening on the surface of the outer sleeve might be caused according to the kind of solvents used for mounting adhesives and coating agents.

【6】 Fumigation

In many cases when exporting or importing electronic devices, such as capacitors, wooden packaging is used. In order to control insects, many times, it becomes necessary to fumigate the shipments. Precautions during "Fumigation" using halogenated chemical such as Methyl Bromide must be taken. Halogen gas can penetrate packaging materials used, such as, cardboard boxes and vinyl bags. Penetration of the halogenide gas can cause corrosion of Electrolytic capacitors.

The Operation of Devices

a) Do not touch a capacitor directly with bare hands.

b) Do not short-circuit the terminal of a capacitor by letting it come into contact with any conductive object. Also, do not spill electric-conductive liquid such as acid or alkaline solution over the capacitor.

c) Do not use capacitors in circumstance where they would be subject to exposure to the following materials exist or expose.
・Oil, water, salty water or damp location.
・Direct sunlight.
・Toxic gases such as hydrogen sulfide, sulfurous acid, nitrous acid, chlorine or its compounds, and ammonium.
・Ozone, ultraviolet rays or radiation.
・Severe vibration or mechanical shock conditions beyond the limits prescribed in the catalogs or product specification.

Maintenance Inspection

a) Make periodic inspections of capacitors that have been used in industrial applications. Before inspection, turn off the power supply and carefully discharge the electricity in the capacitors. Verify the polarity when measuring the capacitors with a volt-ohm meter. Also, do not apply any mechanical stress to the terminals of the capacitors.

b) The following items should be checked during the periodic inspections.
・Significant damage in appearance : venting and electrolyte leakage.
・Electrical characteristics: leakage current, capacitance, tan δ and other characteristics prescribed in the catalogs or product specifications.
We recommend replacing the capacitors if the parts are out of specification.

In Case of Venting

a) If a non-solid aluminum electrolytic capacitor expels gas when venting, it will discharge odors or smoke, or burn in the case of a short-circuit failure. Immediately turn off or unplug the main power supply of the device.

b) When venting, a non-solid aluminum electrolytic capacitor blows out gas with a temperature of over 100℃ . (A solid aluminum electrolytic capacitor discharges decomposition gas or burning gas while the outer resin case is burning.) Never expose the face close to a venting capacitor. If your eyes should inadvertently become exposed to the spouting gas or you inhale it, immediately flush the open eyes with large amounts of water and gargle with water respectively. If electrolyte is on the skin, wash the electrolyte away from the skin with soap and plenty of water. Do not lick the electrolyte of non-solid aluminum electrolytic capacitors.

Storage

We recommend the following conditions for storage.

a) Do not store capacitors at a high temperature or in high humidity. Store the capacitors indoors at a temperature of 5 to 35℃ and a humidity of less than 75% RH.

b) Store the capacitors in places free from water, oil or salt water.

c) Store the capacitors in places free from toxic gasses (hydrogen sulfide, sulfurous acid, chlorine, ammonium, etc.)

d) Store the capacitors in places free from ozone, ultraviolet rays or radiation.

e) Keep capacitors in the original package.

f) It is not applied to a regulation of JEDEC J-STD-020(Rev.C).

Disposal

Please consult with a local industrial waste disposal specialist when disposing of aluminum electrolytic capacitors.

Catalogs

Specifications in catalogs may be subject to change without notice. For more details of precautions and guidelines for aluminum electrolytic capacitors, please refer to Engineering Bulletin No. 634A.