Jun.1.2026 Copyright 2026 HIROSE ELECTRIC CO., LTD. All Rights Reserved.
In case of consideration for using Automotive equipment / device which demand high reliability, kindly contact our sales window

	△数 COUNT	訂正事項 DISCRIPTION OF REVISIONS	擔當 B Y	檢圖 CHKD	年月日 DATE	△数 COUNT	訂正事項 DISCRIPTION OF REVISIONS	擔當 B Y	檢圖 CHKD	年月日 DATE
△					. .	△				. .
△					. .	△				. .
△					. .	△				. .

HRS DRAWING FOR REFERENCE

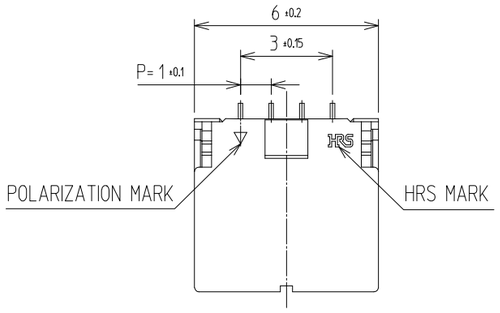

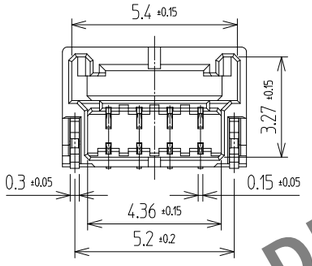

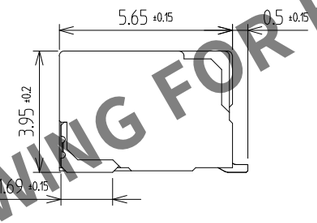

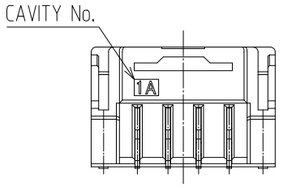

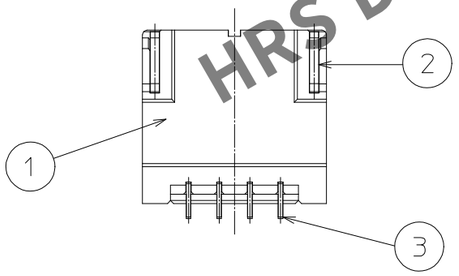

RECOMMENDED PCB LAYOUT (TOP-View)

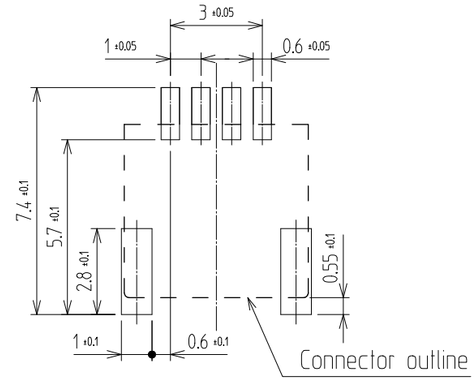

MATING FIGURE

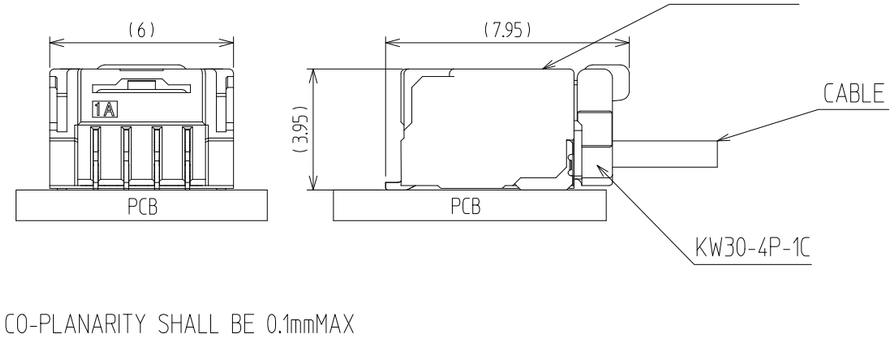

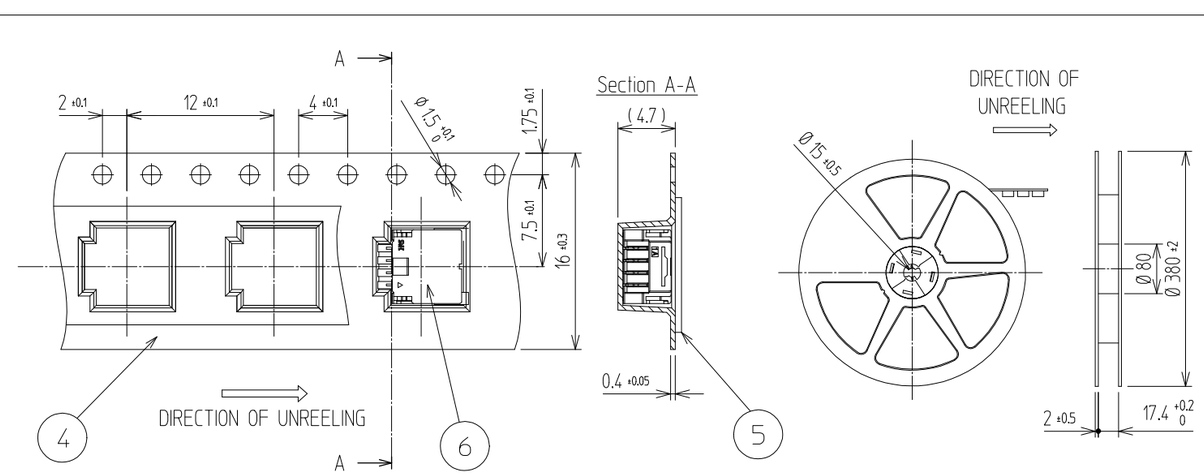

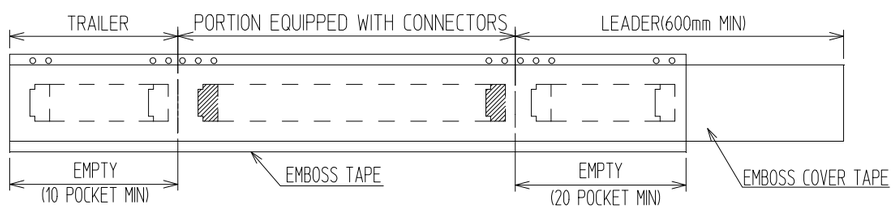

NOTE
1. LEAD CO-PLANARITY SHALL BE 0.1mmMAX
2. 1REEL : 1,500EA CONNECTORS
3. UL(File No. E132750) AUTHORIZATION ARTICLE.
C-UL(File No. E132750) AUTHORIZATION ARTICLE.

NO.	MATERIAL	FINISH,REMARKS	NO.	MATERIAL	FINISH,REMARKS
3	COPPER ALLOY	CONTACT AREA : GOLD 0.2μm MIN. SMT LEAD : GOLD 0.05μm MIN. UNDER PLATING : NICKEL 1μm MIN.	6	CONNECTOR	KW30-4S-1H
2	PHOSPHOR BRONZE	Sn PLATED	5	PET	COVER TAPE
1	LCP	UL94-V0, BLACK	4	PS	EMBOSS CARRIER TAPE

CODE NO. (OLD)	DRAWN	DESIGNED	CHECKED	APPROVED	RELEASED
	SHIN 22.12.22 J.H	SHIN 22.12.22 J.H	LIM 22.12.22 S.M	LIM 22.12.22 S.M	

SCALE 5:1 / UNITS mm	DRAWING NO. EDC3-633959	PART NO. KW30-4S-1H (800)
	HRS HIROSE KOREA CO.,LTD.	CODE NO CL 6669-0006-7-800

1/1