FC1BA

(Former FXA2016B)

2.0mm x 1.6mm
Auto Grade Crystal

Features

- AEC Q200 Qualified
- IATF-16949 QMS
- Tolerances down to ±10 PPM
- Stabilities down to ±20 PPM

STANDARD SPECIFICATIONS	
PARAMETERS	**MAX (Unless otherwise noted)**
Frequency Range	16.000 ~ 54.000 MHz
Frequency Tolerance @ 25°C	(See options below)
Frequency Stability, ref 25°C	(See options below)
Temperature Range Operating (T_{OPR}) Storage (T_{STG})	 See options below -55°C ~ +150°C
Shunt Capacitance (C_O)	3 pF
Load Capacitance (C_L)	(See options below)
Drive Level	100 µW
Aging per year (@ 25°C)	±5 PPM
Maximum Soldering Temp / Time	260°C / 10 Seconds x 2
Moisture Sensitivity Level (MSL) per J-STD-033	N/A
Termination Finish	Au (0.3~1.0µm) over Ni (1.27~8.89µm)
Seal Method	Seam
Lead (Pb) Free	Yes
RoHS Compliant	Yes, no exemptions
REACH Compliant (latest version)	Yes

Frequency Range (MHz)	Operating Mode	Max ESR Ω
16.000 ~ 19.199999	Fundamental	200
19.200 ~ 25.999999	Fundamental	100
26.000 ~ 35.999999	Fundamental	80
36.000 ~ 54.000	Fundamental	60

DIMENSIONS / MECHANICAL SPECIFICATIONS

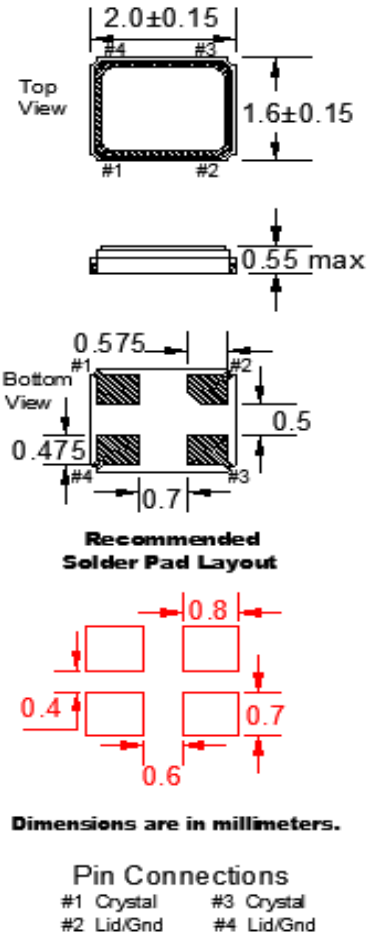

Recommended Solder Pad Layout

Dimensions are in millimeters.

Pin Connections

#1 Crystal #3 Crystal
#2 Lid/Gnd #4 Lid/Gnd

Note: Dimensional drawing is for reference to critical specifications defined by size measurements.

AVAILABLE OPERATING TEMPERATURES AND STABILITIES					
Operating Temperature	**±20 PPM**	**±25 PPM**	**±30 PPM**	**±50 PPM**	**±100 PPM**
-40°C ~ +85°C	O	O	O	O	O
-40°C ~ +105°C	X	X	O	O	O
-40°C ~ +125°C	X	X	X	O	O
-55°C ~ +125°C	X	X	X	O	O
Key: O = Available, X = Not Available					

FC1BA

(Former FXA2016B)

2.0mm x 1.6mm
Auto Grade Crystal

TAPE SPECIFICATIONS (mm)							REEL SPECIFICATIONS (mm)						
A	B	C	D	E	F	REEL QTY	G	H	I	J	K	L	M
ø1.55	4.0	4.0	3.5	8.0	0.65	-T3 = 3,000 -T2 = 2,000 -T1 = 1,000	2.5	Ø13	Ø21	Ø60	Ø180	9.0	2.0

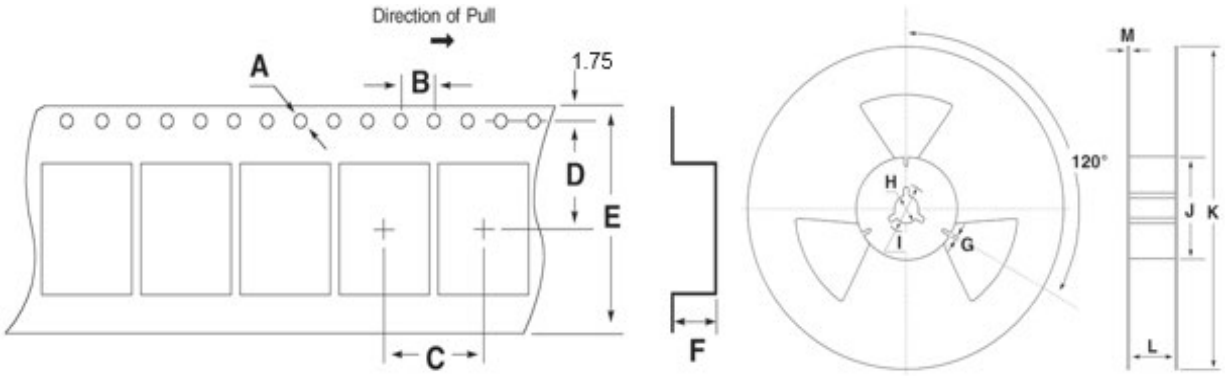

Available Options & Part Identification for Automotive Crystal Model C1BA[1]

Sample PN: FC1BABCVI40.0-T1

F	C1BA	B	C	V	I	40.0	-T1
Fox	**Model Number**	**Tolerance** **B = ±50 PPM** C = ±30 PPM D = ±25 PPM E = ±20 PPM F = ±15 PPM H = ±10 PPM	**Stability** A = ±100 PPM B = ±50 PPM **C = ±30 PPM** D = ±25 PPM E = ±20 PPM	**Load Capacitance[2]** **V=7pF** D=8pF E=10pF G=12pF J=15pF K=16pF L=18pF M=20pF	**Operating Temperature** M = -40 to +85°C P = -40 to +105°C **I = -40 to +125°C** T = -55 to +125°C	**Frequency (MHz)**	**Values Added Options** Blank = Bulk T1 = 1,000 pcs T2 = 2,000 pcs T3 = 3,000 pcs

1 Not all frequency, tolerance, stability, load, and operating temperature combinations may be available.
2 Listed load capacitances represent the most commonly used. Other load capacitances are available. Contact us for assistance

Reliability Test Conditions
Please contact Abracon Quality Assurance department