MM3Z2V0~MM3Z75

Silicon Planar Zener Diodes

Features

- Total power dissipation : max. 300 mW
- Small plastic package suitable for surface mounted design
- Tolerance approximately ± 5%

PINNING

PIN	DESCRIPTION
1	Cathode
2	Anode

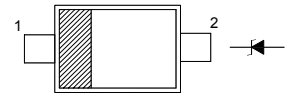

Top View
Simplified outline SOD-323 and symbol

Absolute Maximum Ratings (T_a = 25 °C)

Parameter	Symbol	Value	Unit
Power Dissipation	P_{tot}	300	mW
Junction Temperature	T_j	150	°C
Storage Temperature Range	T_{stg}	- 55 to + 150	°C

Characteristics at T_a = 25 °C

Parameter	Symbol	Max.	Unit
Thermal Resistance Junction to Ambient Air	$R_{\theta JA}$	417	°C/W
Forward Voltage at I_F = 10 mA	V_F	0.9	V

Characteristics at T_a = 25 °C

Type	Marking Code	Zener Voltage Range [1]			Dynamic Impedance		Reverse Leakage Current	
		V_{znom}	I_{ZT} for	V_{ZT}	Z_{ZT} (Max.)	at I_{ZT}	I_R (Max.)	at V_R
		V	mA	V	Ω	mA	μA	V
MM3Z2V0	B0	2.0	5	1.8...2.15	100	5	120	0.5
MM3Z2V2	C0	2.2	5	2.08...2.33	100	5	120	0.7
MM3Z2V4	1C	2.4	5	2.28...2.56	100	5	120	1
MM3Z2V7	1D	2.7	5	2.5...2.9	110	5	120	1
MM3Z3V0	1E	3.0	5	2.8...3.2	120	5	50	1
MM3Z3V3	1F	3.3	5	3.1...3.5	130	5	20	1
MM3Z3V6	1H	3.6	5	3.4...3.8	130	5	10	1
MM3Z3V9	1J	3.9	5	3.7...4.1	130	5	5	1
MM3Z4V3	1K	4.3	5	4...4.6	130	5	5	1
MM3Z4V7	1M	4.7	5	4.4...5	130	5	2	1
MM3Z5V1	1N	5.1	5	4.8...5.4	130	5	2	1.5
MM3Z5V6	1P	5.6	5	5.2...6	80	5	1	2.5
MM3Z6V2	1R	6.2	5	5.8...6.6	50	5	1	3
MM3Z6V8	1X	6.8	5	6.4...7.2	30	5	0.5	3.5
MM3Z7V5	1Y	7.5	5	7...7.9	30	5	0.5	4
MM3Z8V2	1Z	8.2	5	7.7...8.7	30	5	0.5	5
MM3Z9V1	2A	9.1	5	8.5...9.6	30	5	0.5	6
MM3Z10	2B	10	5	9.4...10.6	30	5	0.1	7
MM3Z11	2C	11	5	10.4...11.6	30	5	0.1	8
MM3Z12	2D	12	5	11.4...12.7	35	5	0.1	9
MM3Z13	2E	13	5	12.4...14.1	35	5	0.1	10
MM3Z15	2F	15	5	13.8...15.6	40	5	0.1	11
MM3Z16	2H	16	5	15.3...17.1	40	5	0.1	12
MM3Z18	2J	18	5	16.8...19.1	45	5	0.1	13
MM3Z20	2K	20	5	18.8...21.2	50	5	0.1	15
MM3Z22	2M	22	5	20.8...23.3	55	5	0.1	17
MM3Z24	2N	24	5	22.8...25.6	60	5	0.1	19
MM3Z27	2P	27	5	25.1...28.9	70	2	0.1	21
MM3Z30	2R	30	5	28...32	80	2	0.1	23
MM3Z33	2X	33	5	31...35	80	2	0.1	25
MM3Z36	2Y	36	5	34...38	90	2	0.1	27
MM3Z39	2Z	39	2.5	37...41	100	2	2	30
MM3Z43	3A	43	2.5	40...46	130	2	2	33
MM3Z47	3B	47	2.5	44...50	150	2	2	36
MM3Z51	3C	51	2.5	48...54	180	2	1	39
MM3Z56	3D	56	2.5	52...60	180	2	1	43
MM3Z62	3E	62	2.5	58...66	200	2	0.2	47
MM3Z68	3F	68	2.5	64...72	250	2	0.2	52
MM3Z75	3H	75	2.5	70...79	300	2	0.2	57

[1] V_Z is tested with pulses (20 ms).

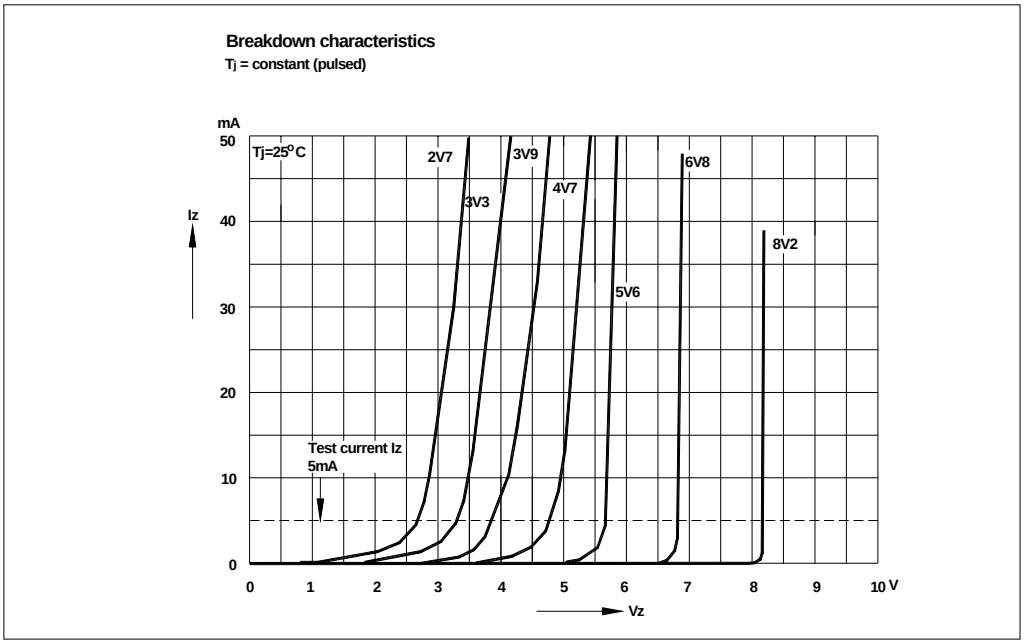

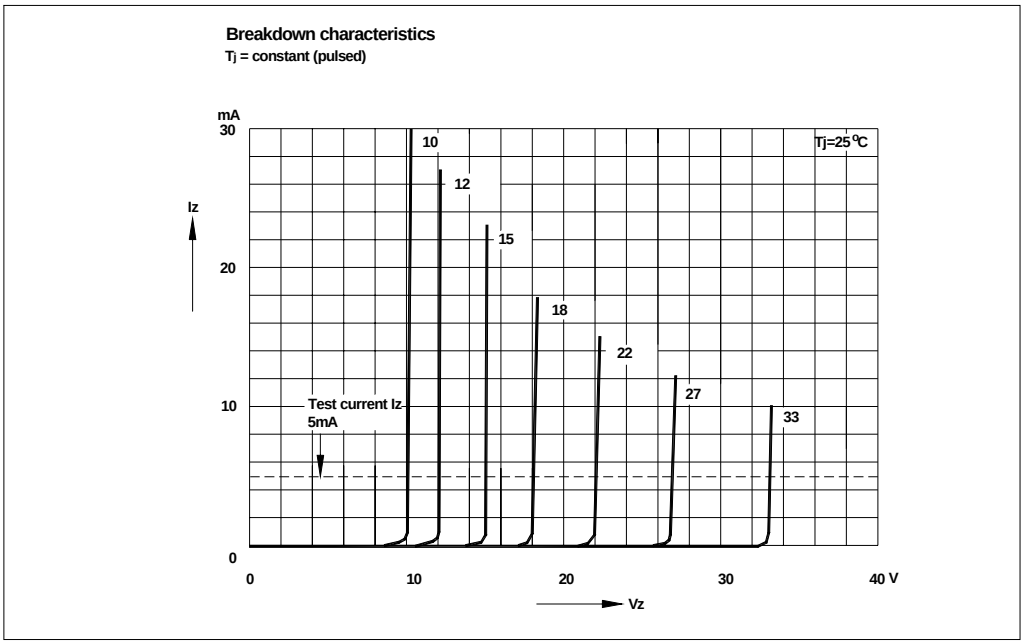

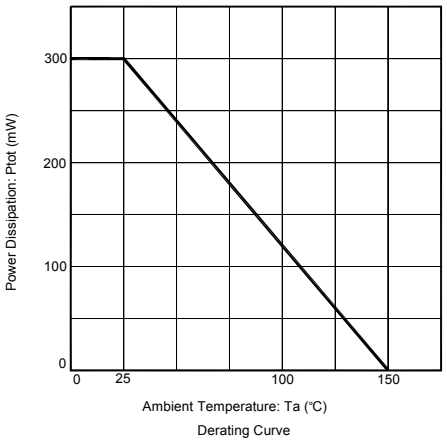

Derating Curve

PACKAGE OUTLINE

Plastic surface mounted package; 2 leads **SOD-323**

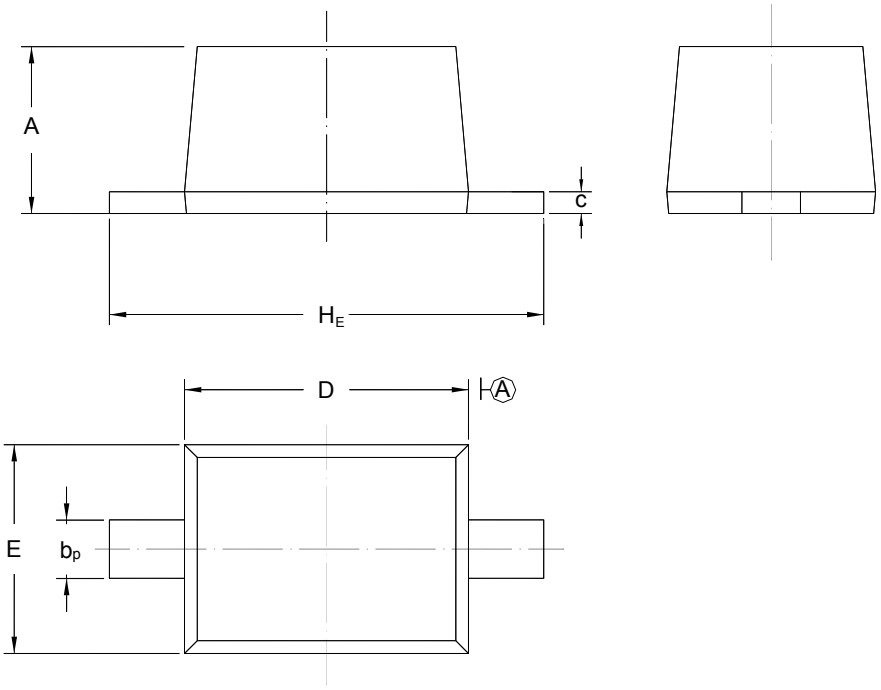

UNIT	A	b_p	C	D	E	H_E
mm	1.10 0.80	0.40 0.25	0.15 0.10	1.80 1.60	1.35 1.15	2.80 2.30