TECH PUBLIC
台舟电子

AQ1003-01LTG

1-Line Uni-directional TVS Diode

www.sot23.com.tw

Features

- Low operating voltage: 24V
- Ultra low capacitance: 50pF Max
- Ultra low leakage: nA level
- Low clamping voltage
- 2-pin leadless package
- Complies with following standards:
- - IEC 61000-4-2 (ESD) immunity test
  Air discharge: ±30kV
  Contact discharge: ±30kV
  – IEC61000-4-5 (Lightning) 7A (8/20μs)
- These are Pb–Free Devices
- Response Time is Typically < 1 ns

Mechanical Characteristics

- Package: SOD523 (0603)
- Lead Finish: Matte Tin
- Case Material: “Green” Molding Compound.
- Moisture Sensitivity: Level 3 per J-STD-020
- Terminal Connections: See Diagram Below
- Shipping Qty :3000/7Inch Tape & Reel

Applications

- Cellular Handsets and Accessories
- Personal Digital Assistants
- Notebooks and Handhelds
- Portable Instrumentation
- Digital Cameras
- Peripherals

Dimensions and Pin Configuration

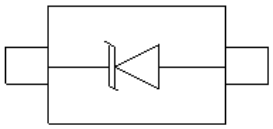

SOD-523 (Top View)

Marking: ZY

Absolute Maximum Ratings (Tamb=25°C unless otherwise specified)

Parameter	Symbol	Value	Unit
Peak Pulse Power (8/20μs)	Ppk	300	W
Peak Pulse Current (8/20μs)	Ipp	7	A
ESD per IEC 61000−4−2 (Air) ESD per IEC 61000−4−2 (Contact)	V_{ESD}	±30 ±30	kV
Operating Temperature Range	T_J	−55 to +125	°C
Storage Temperature Range	Tstg	−55 to +150	°C

Electrical Characteristics (TA=25°C unless otherwise specified)

Parameter	Symbol	Min	Typ	Max	Unit	Test Condition
Reverse Working Voltage	V_{RWM}			24	V	
Breakdown Voltage	V_{BR}	26			V	I_T = 1mA
Reverse Leakage Current	I_R			0.2	uA	V_{RWM} =24V
Clamping Voltage	V_C			31	V	Ipp=1A(8x 20us pulse)
Clamping Voltage	V_C			42	V	Ipp=7A(8x 20us pulse)
Junction Capacitance	C_J			50	pF	VR = 0V, f = 1MHz

Typical Performance Characteristics (T_A=25°C unless otherwise Specified)

Fig1. 8/20μs Pulse Waveform

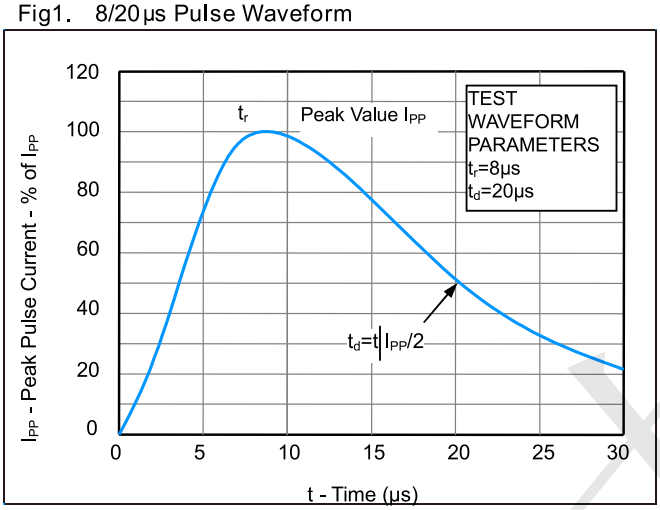

Fig2. ESD Pulse Waveform (according to IEC 61000-4-2)

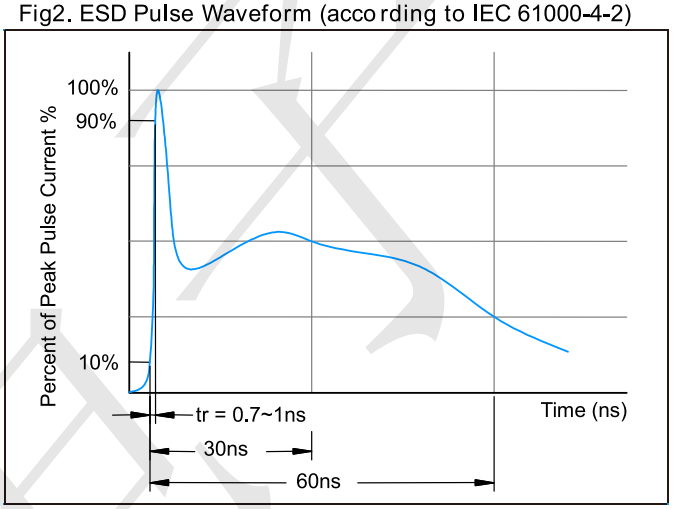

Fig3. Power Derating Curve

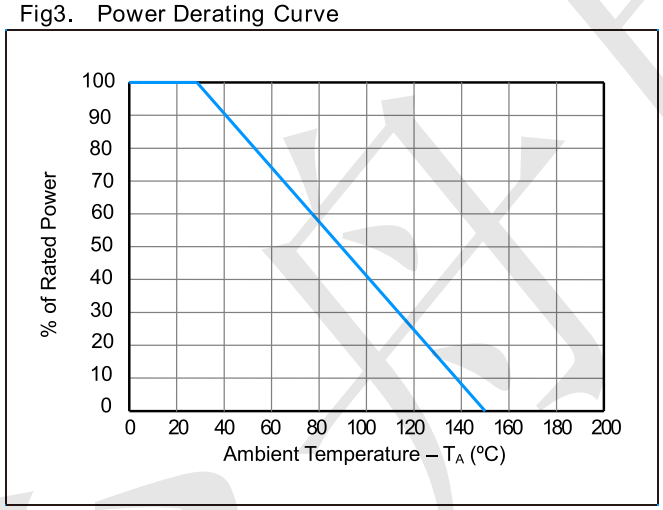

SOD523 (0603) Package Outline Drawing

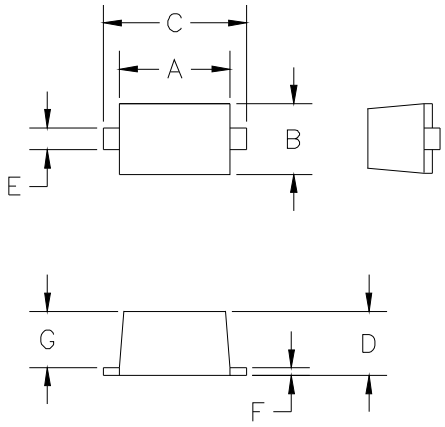

DIMENSIONS					
DIM[N]	INCHES		MM [1]		NOTE
	MIN	MAX	MIN	MAX	
A	.043	.051	1.10	1.30	–
B	.028	.035	0.70	0.90	–
C	.059	.067	1.50	1.70	–
D	.020	.028	0.50	0.70	–
E	.010	.014	0.25	0.35	–
F	.004	.008	0.10	0.20	–
G	.020	.028	0.50	0.70	–

[1] CONTROLLING DIMENSION: MILLIMETERS

Suggested Land Pattern

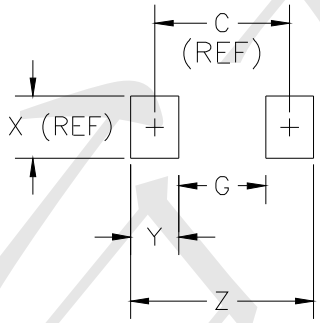

DIMENSIONS					
DIM[N]	INCHES		MM [1]		NOTE
	MIN	MAX	MIN	MAX	
C	–	.067	–	1.70	REF
G	–	.043	–	1.10	–
X	–	.031	–	0.80	REF
Y	–	.024	–	0.60	–
Z	–	.091	–	2.30	–

[1] CONTROLLING DIMENSION: MILLIMETERS