TECH PUBLIC
台舟电子

# STS521240U161

**1-Line Uni-directional TVS Diode**

www.sot23.com.tw

## Features

- Low operating voltage: 24V
- Ultra low capacitance: 50pF Max
- Ultra low leakage: nA level
- Low clamping voltage
- 2-pin leadless package
- Complies with following standards:
- - IEC 61000-4-2 (ESD) immunity test
  Air discharge: ±30kV
  Contact discharge: ±30kV
  – IEC61000-4-5 (Lightning) 8A (8/20μs)
- These are Pb–Free Devices
- Response Time is Typically < 1 ns

## Mechanical Characteristics

- Package: SOD523 (0603)
- Lead Finish: Matte Tin
- Case Material: “Green” Molding Compound.
- Moisture Sensitivity: Level 3 per J-STD-020
- Terminal Connections: See Diagram Below
- Shipping Qty :3000/7Inch Tape & Reel

## Applications

- Cellular Handsets and Accessories
- Personal Digital Assistants
- Notebooks and Handhelds
- Portable Instrumentation
- Digital Cameras
- Peripherals

## Dimensions and Pin Configuration

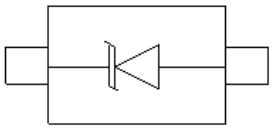

SOD-523 (Top View)

**Marking: ZY**

## Absolute Maximum Ratings (Tamb=25°C unless otherwise specified)

| Parameter | Symbol | Value | Unit |
|---|---|---|---|
| Peak Pulse Power (8/20μs) | Ppk | 300 | W |
| Peak Pulse Current (8/20μs) | Ipp | 7 | A |
| ESD per IEC 61000−4−2 (Air)<br>ESD per IEC 61000−4−2 (Contact) | $V_{ESD}$ | ±30<br>±30 | kV |
| Operating Temperature Range | $T_J$ | −55 to +125 | °C |
| Storage Temperature Range | Tstg | −55 to +150 | °C |

## Electrical Characteristics (TA=25°C unless otherwise specified)

| Parameter | Symbol | Min | Typ | Max | Unit | Test Condition |
|---|---|---|---|---|---|---|
| Reverse Working Voltage | $V_{RWM}$ | | | 24 | V | |
| Breakdown Voltage | $V_{BR}$ | 26 | | | V | $I_T$ = 1mA |
| Reverse Leakage Current | $I_R$ | | | 0.2 | uA | $V_{RWM}$ =24V |
| Clamping Voltage | $V_C$ | | | 31 | V | Ipp=1A(8x 20us pulse) |
| Clamping Voltage | $V_C$ | | | 42 | V | Ipp=8A(8x 20us pulse) |
| Junction Capacitance | $C_J$ | | | 50 | pF | VR = 0V, f = 1MHz |

## Typical Performance Characteristics ($T_A$=25°C unless otherwise Specified)

Fig1. 8/20μs Pulse Waveform

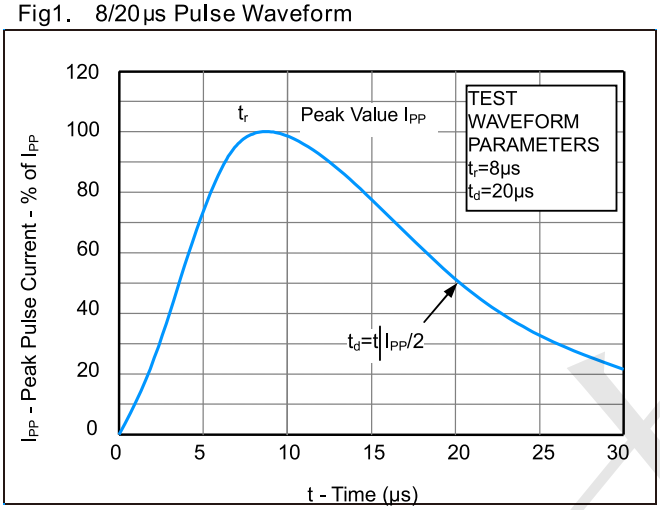


Fig2. ESD Pulse Waveform (according to IEC 61000-4-2)

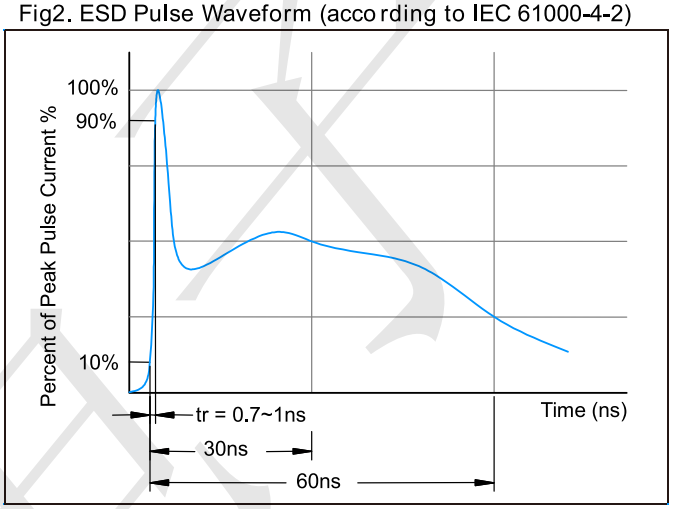


Fig3. Power Derating Curve

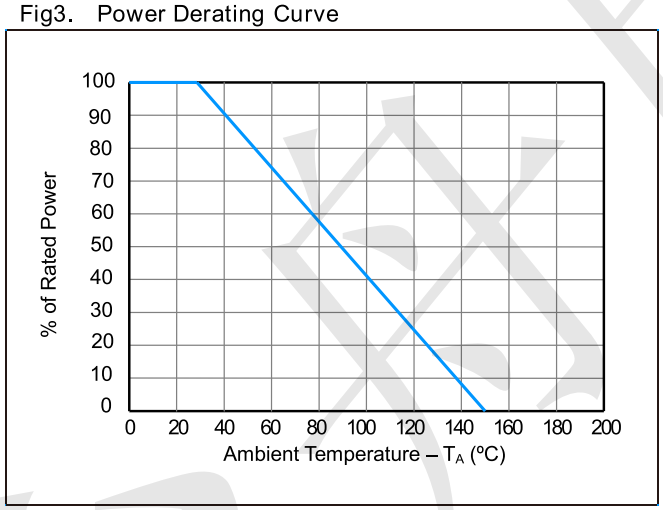

## SOD523 (0603) Package Outline Drawing

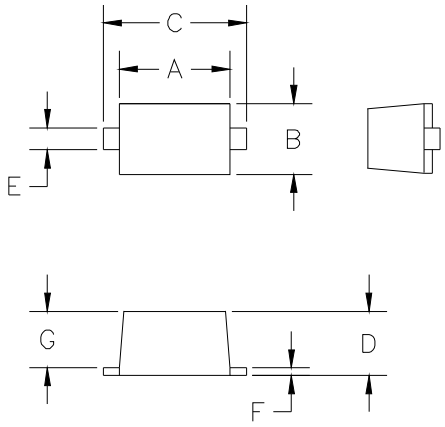


| DIMENSIONS | | | | | |
|---|---|---|---|---|---|
| DIM[N] | INCHES | | MM [1] | | NOTE |
| | MIN | MAX | MIN | MAX | |
| A | .043 | .051 | 1.10 | 1.30 | – |
| B | .028 | .035 | 0.70 | 0.90 | – |
| C | .059 | .067 | 1.50 | 1.70 | – |
| D | .020 | .028 | 0.50 | 0.70 | – |
| E | .010 | .014 | 0.25 | 0.35 | – |
| F | .004 | .008 | 0.10 | 0.20 | – |
| G | .020 | .028 | 0.50 | 0.70 | – |

[1] CONTROLLING DIMENSION: MILLIMETERS

## Suggested Land Pattern

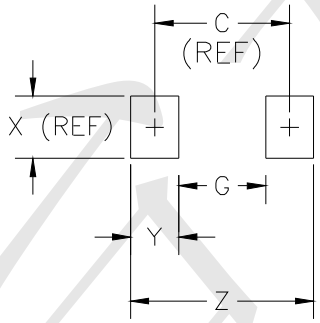


| DIMENSIONS | | | | | |
|---|---|---|---|---|---|
| DIM[N] | INCHES | | MM [1] | | NOTE |
| | MIN | MAX | MIN | MAX | |
| C | – | .067 | – | 1.70 | REF |
| G | – | .043 | – | 1.10 | – |
| X | – | .031 | – | 0.80 | REF |
| Y | – | .024 | – | 0.60 | – |
| Z | – | .091 | – | 2.30 | – |

[1] CONTROLLING DIMENSION: MILLIMETERS