May.1.2024 Copyright 2024 HIROSE ELECTRIC CO., LTD. All Rights Reserved.
In case of consideration for using Automotive equipment / device which demand high reliability, kindly contact our sales window correspondents.

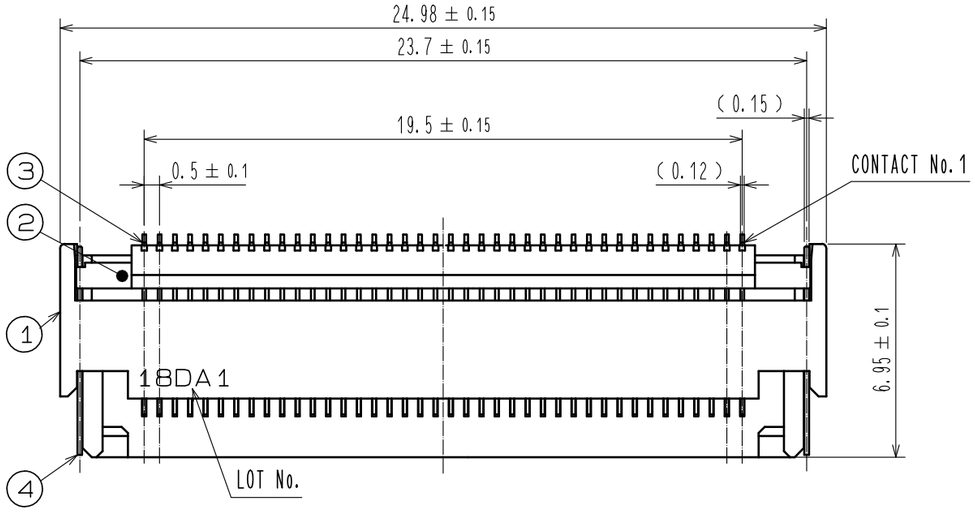


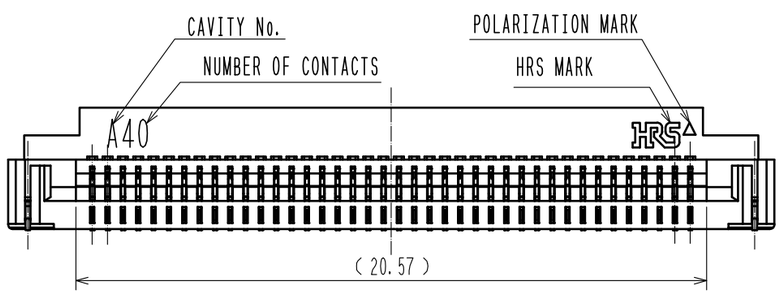


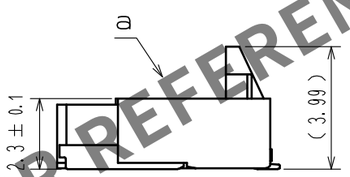





RECOMMENDED PCB MOUNTING PATTERN

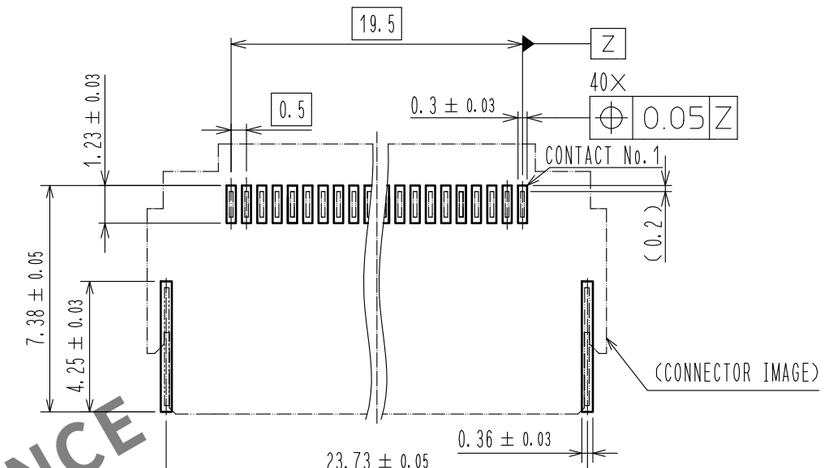


RECOMMENDED STENCIL PATTERN
( RECOMMENDED STENCIL THICKNESS : t=0.12 )

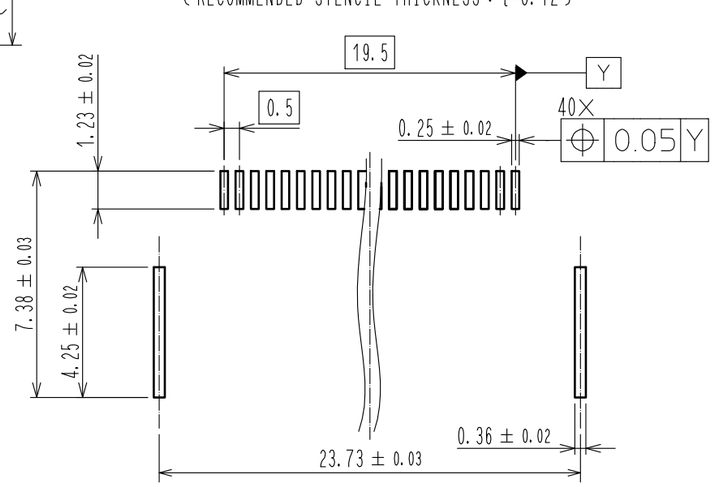


NOTES 1. The dimension in parentheses are for reference.
2. Lead CO-PLANARITY including reinforced metal fittings shall be 0.1 MAX.
3. To be delivered with tape and reel packages.
See attached packaging specification for details.
4. Note that preventive hole for sink mark could be added for improvement.
5. This product satisfies halogen free requirements defined as 900ppm maximum chlorine, 900ppm maximum bromine, and 1500ppm maximum total of chlorine and bromine.

| NO. | MATERIAL | FINISH , REMARKS | NO. | MATERIAL | FINISH , REMARKS |
|---|---|---|---|---|---|
| 4 | BRASS | TIN PLATING 1μmMIN OVER COPPER 0.3μmMIN | | | |
| 3 | COPPER ALLOY | (CONTACT AREA・MOUNTING AREA) GOLD 0.03μmMIN OVER NICKEL 1μmMIN (OTHER) NICKEL PLATING 1μmMIN | 8 | (CONNECTOR) | |
| | | | 7 | POLYSTYRENE | |
| 2 | PA | BLACK | 6 | POLYESTER | |
| 1 | LCP | BLACK | 5 | POLYSTYRENE | |

| UNITS | SCALE | | COUNT | DESCRIPTION OF REVISIONS | DESIGNED | CHECKED | DATE |
|---|---|---|---|---|---|---|---|
| mm | 5 : 1 | △0 | | | | | |

HIROSE ELECTRIC CO., LTD.

| | | | | |
|---|---|---|---|---|
| APPROVED | HS. HIRAHARA | 20230728 | DRAWING NO. | EDC-382064-00-00 |
| CHECKED | HS. HIRAHARA | 20230728 | PART NO. | FH69-40S-0.5SH |
| DESIGNED | YT. SASAKI | 20230727 | CODE NO. | CL0580-5006-0-00 △0 1/7 |
| DRAWN | YT. SASAKI | 20230727 | | |

HRS DRAWING FOR REFERENCE

May.1.2024 Copyright 2024 HIROSE ELECTRIC CO., LTD. All Rights Reserved.
In case of consideration for using Automotive equipment / device which demand high reliability, kindly contact our sales window correspondents.

## RECOMMENDED FPC/FFC (15:1)

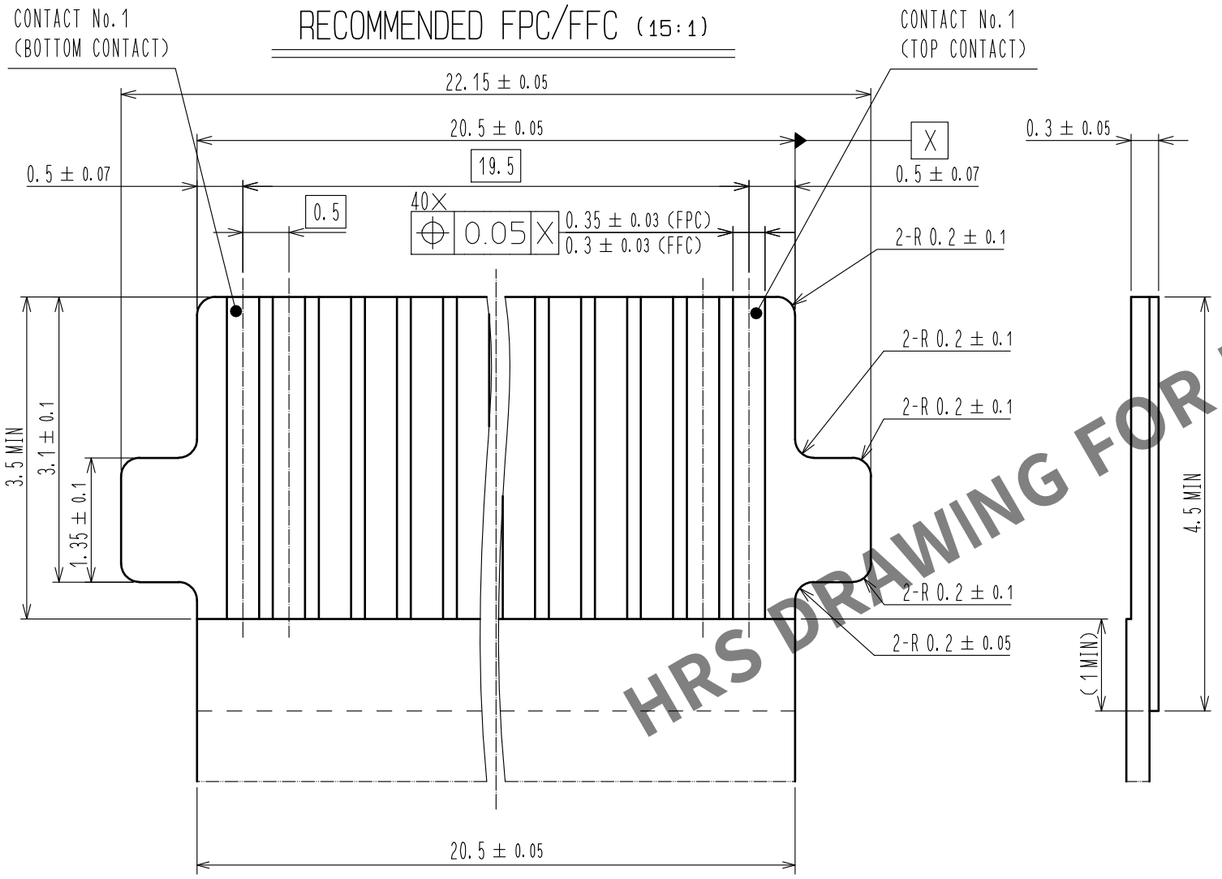


## FPC CONFIGURATION (REFERENCE EXAMPLE) (SCALE:FREE)

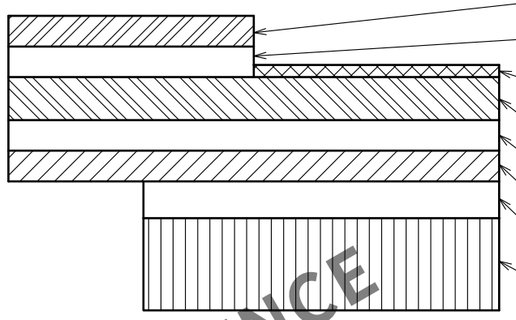

| MATERIAL NAME | MATERIAL | THICKNESS(μm) |
|---|---|---|
| COVERING FILM LAYER | POLYIMIDE 1mil thick. | 25 |
| COVER ADHESIVE | | 25 |
| SURFACE TREATMENT | 1μm to 5μm NICKEL UNDERPLATED 0.2μm GOLD PLATED | (3) |
| COPPER FOIL | Cu 1 oz | 35 |
| BASE ADHESIVE | HEAT-HARDENED ADHESIVE | 25 |
| BASE FILM | POLYIMIDE 1mil thick. | 25 |
| REINFORCEMENT MATERIAL ADHESIVE | HEAT-HARDENED ADHESIVE | 30 |
| STIFFENER | POLYIMIDE 7mil thick. | 175 |

HRS DRAWING FOR REFERENCE

## FFC CONFIGURATION (REFERENCE EXAMPLE) (SCALE:FREE)

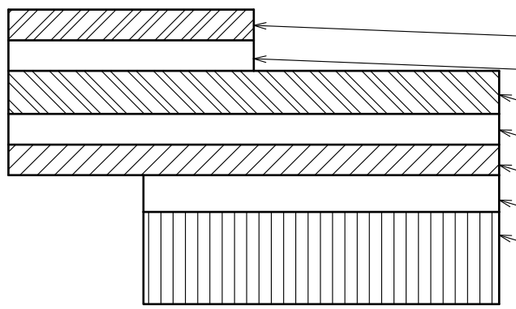

| MATERIAL NAME | MATERIAL | THICKNESS(μm) |
|---|---|---|
| POLYESTER FILM | | (12) |
| ADHESIVE | POLYESTER THERMOPLASTIC TYPE | (30) |
| GOLD PLATED, SOFT COPPER FILM | | 35 |
| ADHESIVE | POLYESTER | 30 |
| POLYESTER | | 12 |
| ADHESIVE | POLYESTER | 30 |
| STIFFENER | POLYESTER | 188 |

## <RECOMMENDED FPC/FFC>

| | | |
|---|---|---|
| HRS | DRAWING NO. | EDC-382064-00-00 |
| | PART NO. | FH69-40S-0.5SH |
| | CODE NO. | CL0580-5006-0-00 |

May.1.2024 Copyright 2024 HIROSE ELECTRIC CO., LTD. All Rights Reserved.
In case of consideration for using Automotive equipment / device which demand high reliability, kindly contact our sales window correspondents.

# EMBOSSED CARRIER TAPE DIMENSION (2:1)

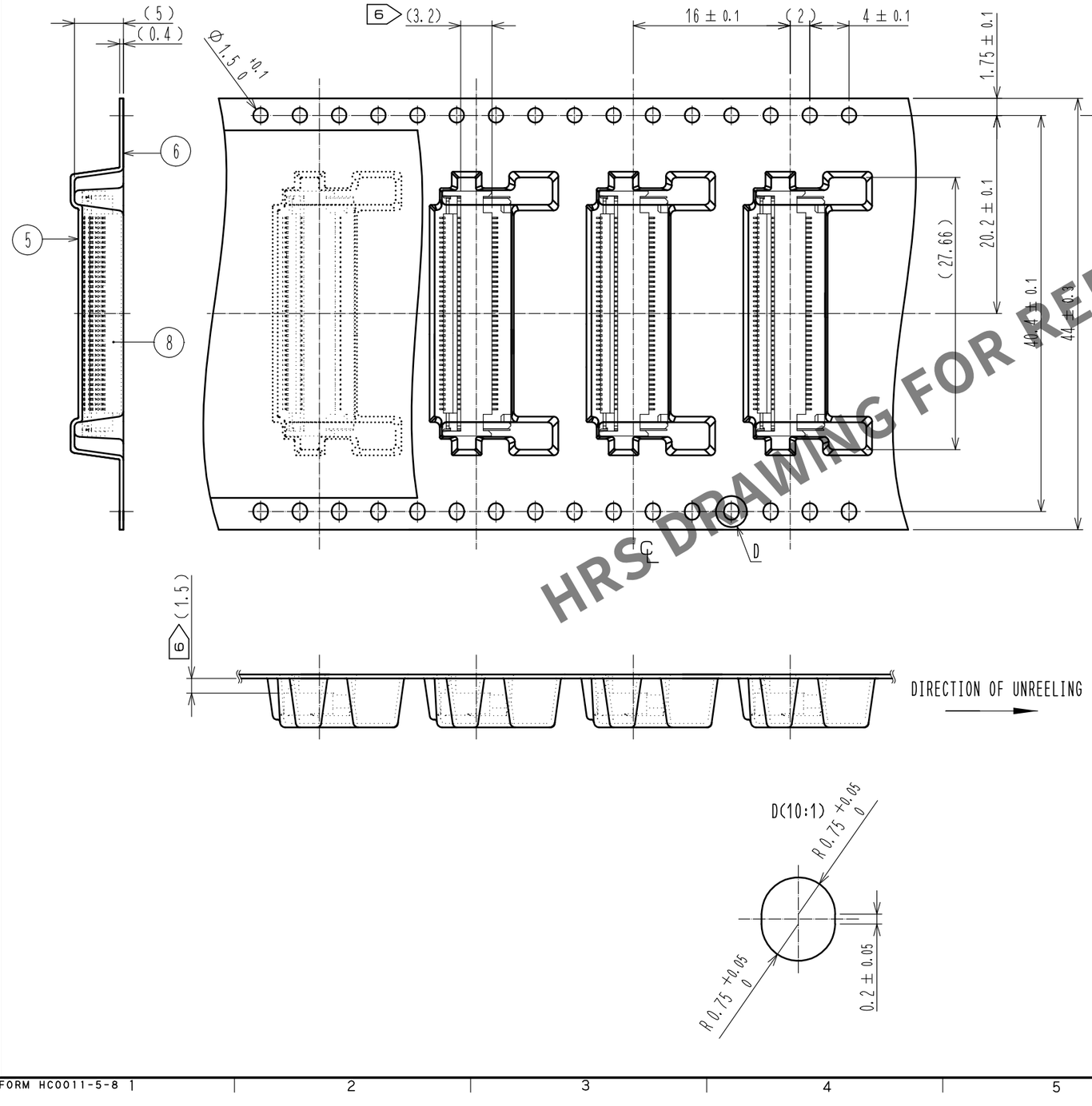





# REEL DIMENSION (FREE)

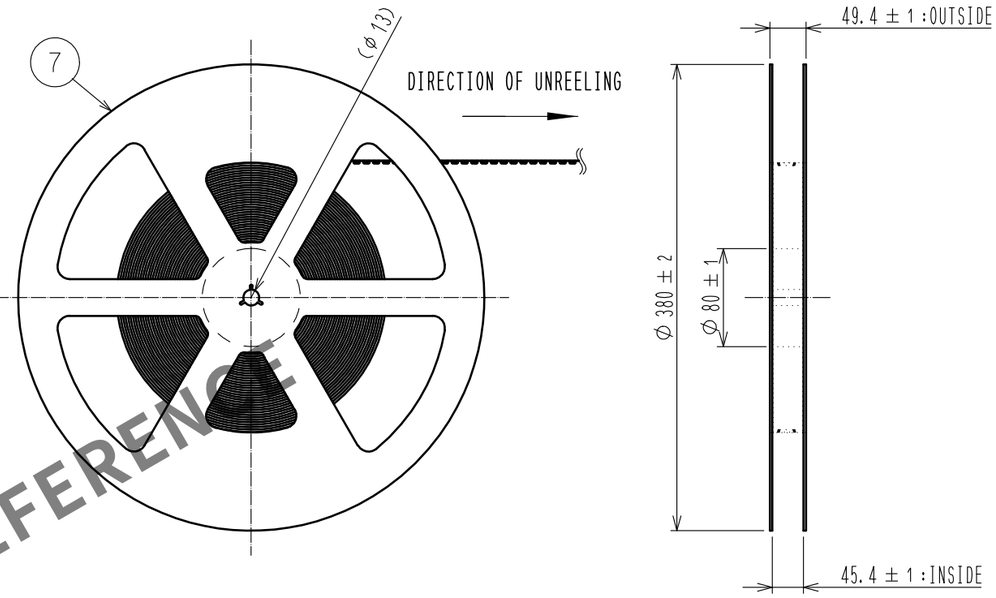


# LEADER, TRAILER DIMENSION (FREE)

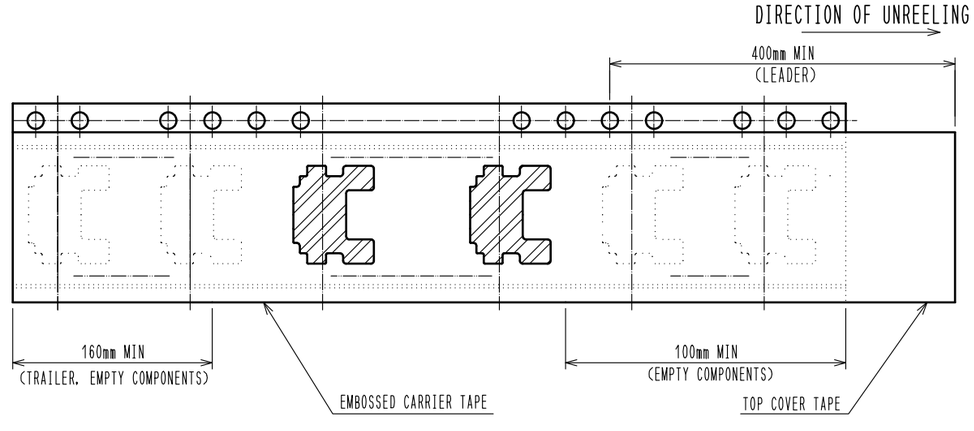


NOTES 6 The indicated dimension indicates the pick-up area or pick-up position for automatic mounting.

7. 1 reel : 1000 connectors.
8. Refer to JIS C 0806 and IEC 60286-3. (Packaging of components for automatic mounting.)

# <PACKING SPECIFICATION>

HRS DRAWING FOR REFERENCE

| | | |
|---|---|---|
| HRS | DRAWING NO. | EDC-382064-00-00 |
| | PART NO. | FH69-40S-0.5SH |
| | CODE NO. | CL0580-5006-0-00 |

May.1.2024 Copyright 2024 HIROSE ELECTRIC CO., LTD. All Rights Reserved.
In case of consideration for using Automotive equipment / device which demand high reliability, kindly contact our sales window correspondents.

To prevent connector/FPC breakege and contact failure (mating failure, FPC pattern breakage, etc),
read through the instructions shown below and handle the connector properly.
Although this instruction manual is applicable to usage with FPC/FFC.

【Connector Part Nomenclature】

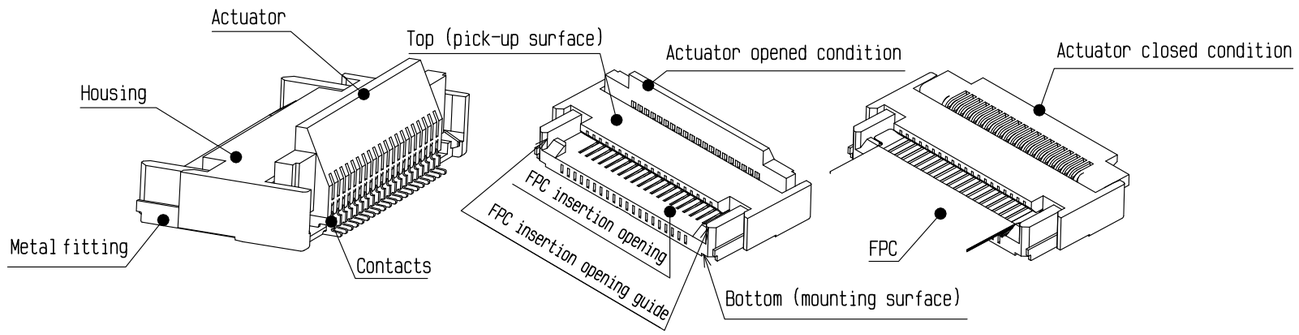


【Operation and cautions】

1. Initial condition

Actuator does not have to be operated before inserting FPC,
as the connector is delivered with the actuator opened.

✕NG

Connector operation when FPC is not inserted or unmounted.

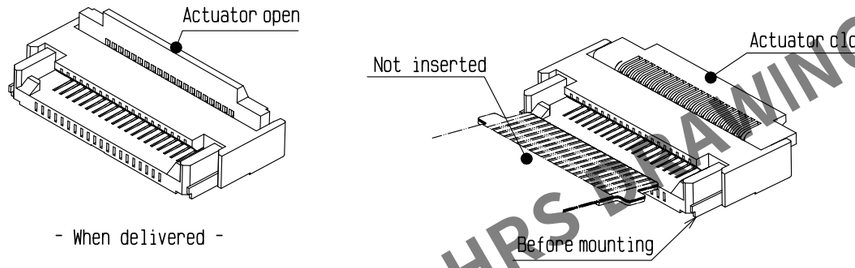


- When delivered -

2. How to insert and remove FPC
- When inserting the FPC, insert the FPC at about 10 degree angle to the PCB mounting surface.
  Also, please position both ends of the FPC by insertion opening guide and then insert it straightly.
- When removing the FPC, please pull it out diagonally upward so that the both end tab of FPC
  get over the housing boss.

○OK

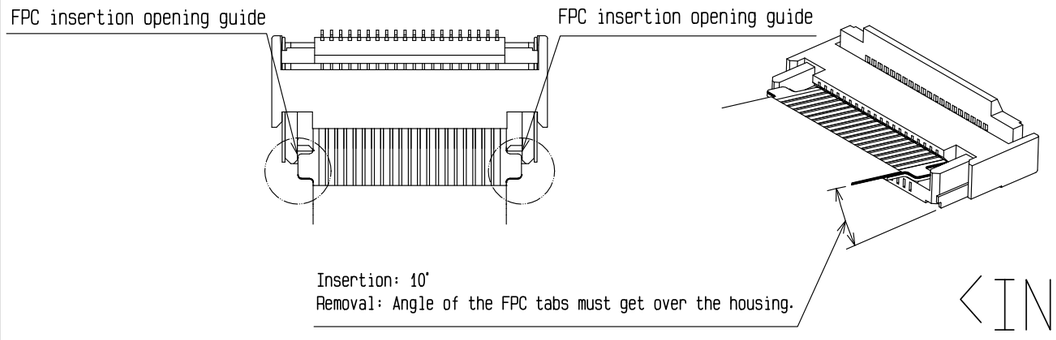


✕NG

Insertion and removal with actuator close

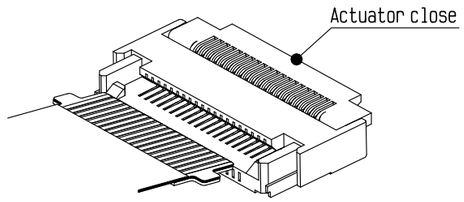


✕NG

Insertion and removal
during wrenching up, down, left and right.

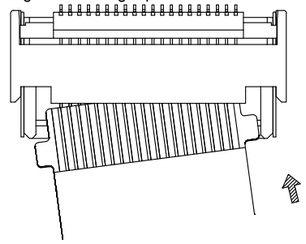

✕NG

Insertion and removal
excessive angles from PCB surface

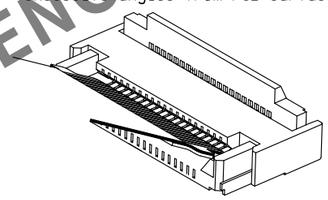

✕NG

Insertion and removal
horizontal angle from PCB surface

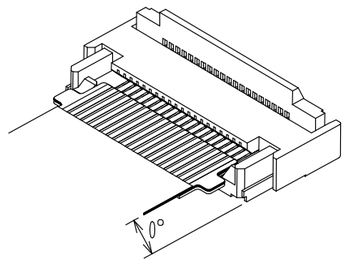


3. FPC insertion check and mating confirmation of the FPC
Guide for positioning FPC guide the FPC tabs to the correct position.
Make sure that the FPC tabs are located in correct position
as shown in the figure below after FPC insertion and mating.

○OK

FPC(Proper position)

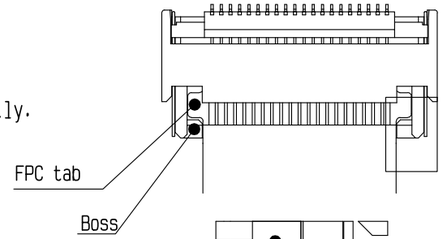


✕NG

FPC(shallow Position)

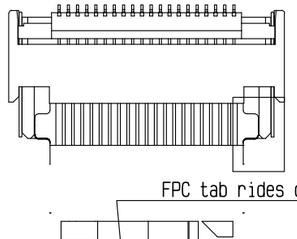

✕NG

FPC(Slanted)

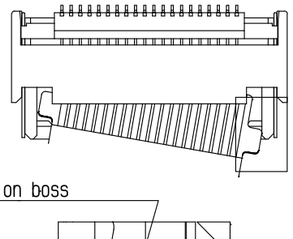

FPC tab rides on boss

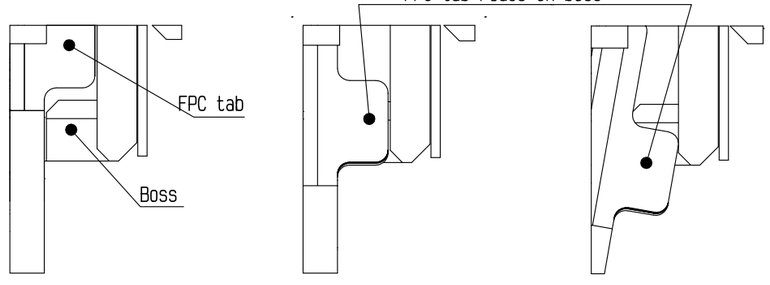


HRS DRAWING FOR REFERENCE

# <INSTRUCTION MANUAL(1)>

| | |
|---|---|
| DRAWING NO. | EDC-382064-00-00 |
| PART NO. | FH69-40S-0.5SH |
| CODE NO. | CL0580-5006-0-00 |

△0 4/7

May.1.2024 Copyright 2024 HIROSE ELECTRIC CO., LTD. All Rights Reserved.
In case of consideration for using Automotive equipment / device which demand high reliability, kindly contact our sales window correspondents.

4. How to lock and unlock

The actuator rotates around the rotational axis.

Lock : Apply load to rotate the actuator by 90 degree after inserting the FPC.

Unlock : Slowly flip up the Actuator lock

OK

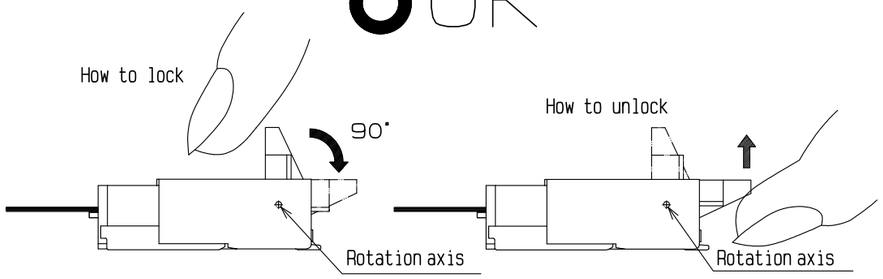


OK

Operate the center of the actuator

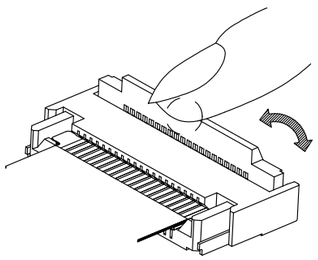

NG

Operate at one end of the actuator

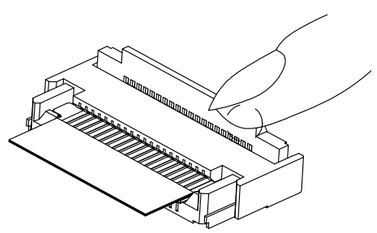

Operate near both-ends of the actuator at the same timing moment.
(Around 3 PIN from the end)

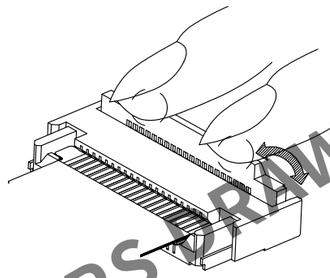

NG

Force from reverse direction to actuator.

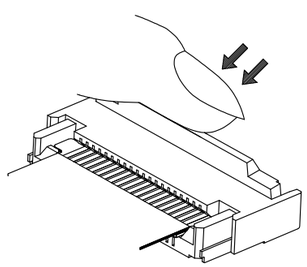

NG

Push horizontally to lock

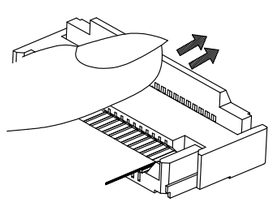

NG

Push vertical to lock

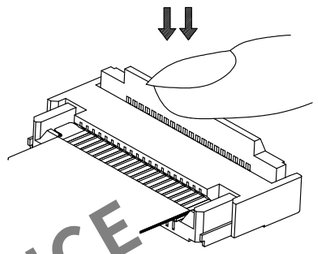

NG

Operate with a sharp tool

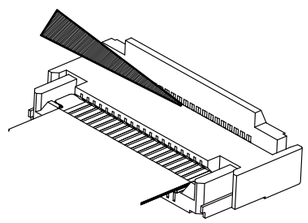

NG

Excessive force to housing

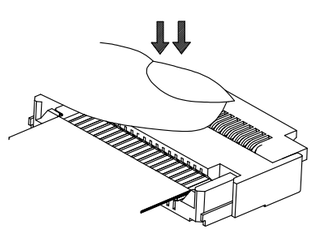

NG

Pick the actuator to lift

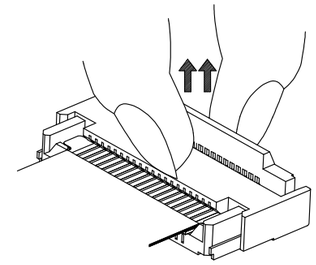

NG

Operation to push the actuator into connector

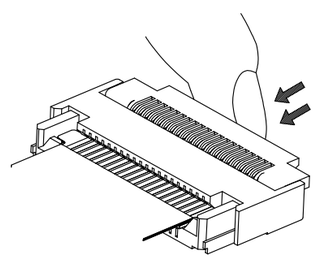

NG

Operation from FPC insertion opening side

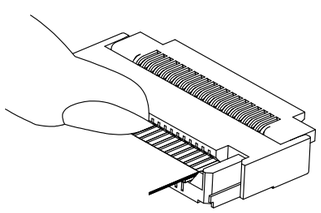

HRS DRAWING FOR REFERENCE

# <INSTRUCTION MANUAL(2)>

| | |
|---|---|
| DRAWING NO. | EDC-382064-00-00 |
| PART NO. | FH69-40S-0.5SH |
| CODE NO. | CL0580-5006-0-00 |

△0 5/7

May.1.2024 Copyright 2024 HIROSE ELECTRIC CO., LTD. All Rights Reserved.
In case of consideration for using Automotive equipment / device which demand high reliability, kindly contact our sales window correspondents.

HRS DRAWING FOR REFERENCE

[Instructions for PCB layout]

Please design a PCB layout not to apply load to connector and FPC.

[Cautions]
- If the FPC has to be curled/bended in your cabling design,
  please keep enough degree of freedom in your design to keep the FPC tension free.
  In this regard, the stiffener is parallel to the PCB.
- Do not mount other components underneath the FPC stiffener which may interfere with the connection.
- Please consult with the FPC manufacturer about FPC bending performance
  and wire breakage strength while making design.
- Keep enough space for the rotation of the actuator during PCB and component layout design.
- Please consult with our sales representative if you are using FPC with different configuration
  from our recommendation.

OOK

No load applied to stiffener

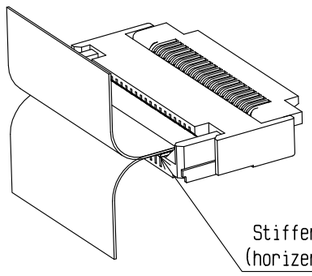


XNG

Load applied to FPC

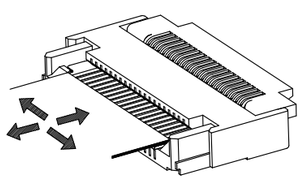

XNG

Load applied to stiffener

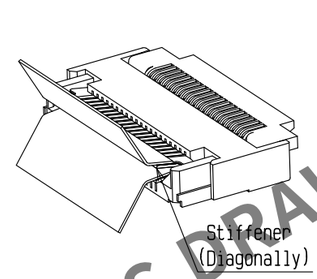


XNG

Housing or parts interfering with the FPC

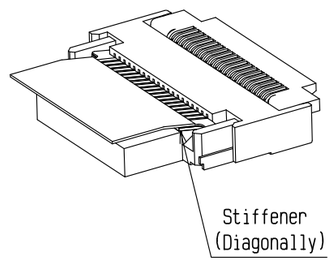


[Instructions for mounting on the PCB]

- Refer to recommended layouts for PCB, stencil pattern and FPC dimension.
  Please inspect the size of solder fillet and flux climbing height of the mounted connector
  while using different land/stencil pattern from our recommendation.
- Please verify your solder resist/silk screening design carefully before implementing the design.
- Apply reflow temperature profile within the specified conditions.
  For specific applications, the recommended temperature may vary depending on type/volume/thickness
  of solder paste and size/thickness of PCB.
  Please consult with your solder paste and equipment manufacturer for specific recommendations.
- Please try to minimize the warpage of the PCB.
  Soldering failure could still occur due to the PCB warpage
  even if the coplanarity of the connector is under 0.1mm.
- If the connector is mounting on FPC, please make sure to put a stiffener on the backside of the FPC.
  Recommended stiffner: Glass epoxy material with thickness of 0.3mm MIN.
- Do not apply 0.5N or greater external force on the connector
  when unreeling or handling the connector before mounting.
  Excessive mechanical stress may damage the connector before mounting.

[Instructions for PCB handling after mounting the connector]

The warpage of PCB may apply excessive stress on the connector and damage the connector.

- ·Splitting a large PCB into several pieces
  ·Installing mounting screw on PCB
  During the assembly processes decribed above, care shall be taken so as not to give any stresses
  of deflection or twisting to the PCB.
- The warpage of a 100mm wide PCB should remain within 0.5mm.

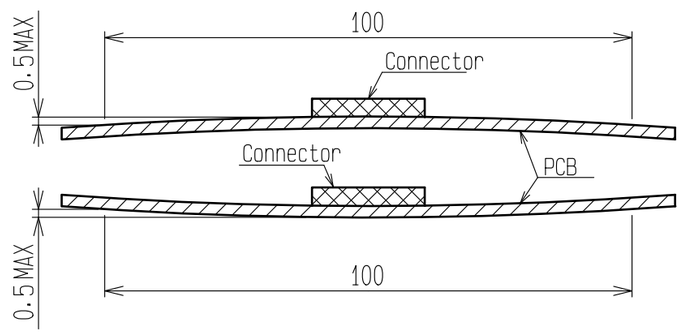


[Instructions of hand soldering]

- Do not perform hand soldering with the FPC inserted into the connector.
- Do not apply excessive heat. And soldering iron must not touch connector except terminal leads area.
- Do not supply excessive solder (flux).

<INSTRUCTION MANUAL(3)>

| | | |
|---|---|---|
| HRS | DRAWING NO. | EDC-382064-00-00 |
| | PART NO. | FH69-40S-0.5SH |
| | CODE NO. | CL0580-5006-0-00 △0 6/7 |

May.1.2024 Copyright 2024 HIROSE ELECTRIC CO., LTD. All Rights Reserved.
In case of consideration for using Automotive equipment / device which demand high reliability, kindly contact our sales window correspondents.

|Recommended reflow temperature profile|

The temperatures mentioned above refer to the PCB surface temperature near the connector leads.
For specific applications, the recommended temperature may vary depending on type/volume/thickness of solder paste and size/thickness of PCB.
Please consult with your solder paste and equipment manufacturer for specific recommendations.

- Reflow method:IR reflow
- Number of reflow cycles:2 cycles MAX.

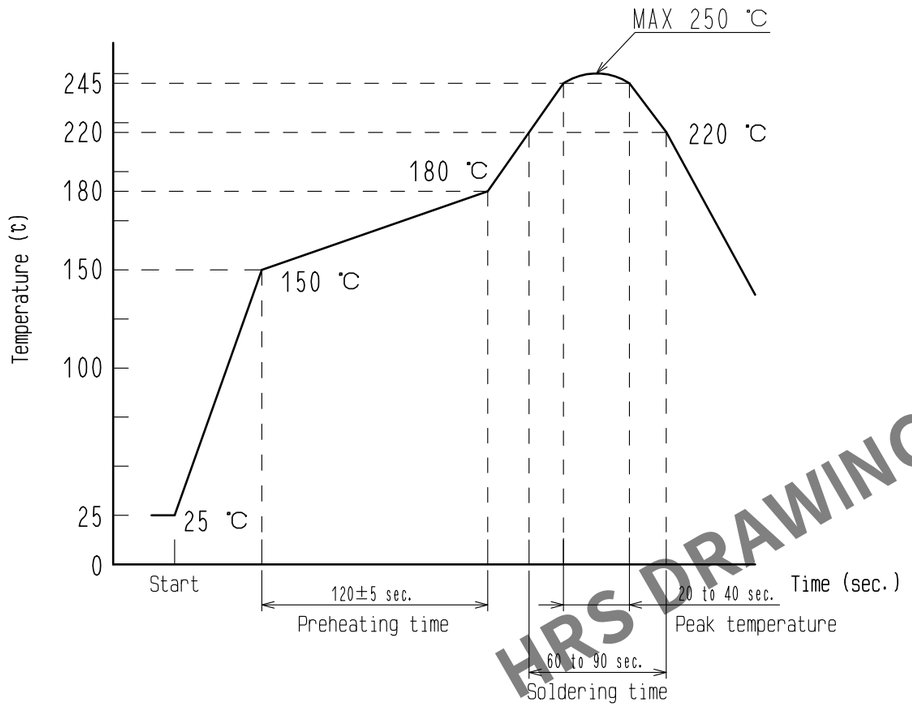


HRS DRAWING FOR REFERENCE

<INSTRUCTION MANUAL(4)>

| | |
|---|---|
| DRAWING NO. | EDC-382064-00-00 |
| PART NO. | FH69-40S-0.5SH |
| CODE NO. | CL0580-5008-0-00 |

△0 7/7

# Mouser Electronics

Authorized Distributor

Click to View Pricing, Inventory, Delivery & Lifecycle Information:

Hirose Electric:

FH69-40S-0.5SH