产品承认书
SPECIFICATION FOR APPROVAL

客户名称:
CUSTOMER

我司料号:
OUR PART NO. **XRT953B36-331MVSYL4**

我司品名:
OUR PART NAME **Magnetic ring common mode choke**

送样日期:
DATE SAMPLES _____ 数 量:
QUANTITY _____

制造确认 MANUFACTURER APPROVE		
拟制 DRAWN	审核 CHECKED	确认 APPROVED
HuFangting	RaoPing	ZhongCuilan

客户确认 CUSTOMER APPROVE

客户名称 CUSTOMER NAME:

客户料号 CUSTOMER P/N:

规格型号 DESCRIPTION: **9×5×3, 0.4-line, 6TS, vertical base, 3×6, leather-yellow, twisted, 330 UH**

检查結果: ☐ 合格 ☐不合格 签名及盖章:

INSPECT RESULT ACCEPT REJECT SIGNATURE AND STAMP

说明 REMARK:

如对本承认书内容有异议请提出或标记发送至我司，本承认书在未收到异议回复时于本承认书提供一周后生效。

If you have any objection to the contents of this acknowledgment, please raise it or send the mark to us. The acknowledgment will become effective one week after the acknowledgment is provided in the absence of any objection.

东莞市祥如电子有限公司

DONGGUAN XIANGRU ELECTRONICS CO.,LTD

Tel：0769-86346548 Fax：0769-86346358

Email：dgxiangru@126.com

产品承认书
SPECIFICATION FOR APPROVAL

客户名称 CUSTOMER		日期 DATE	2026/1/15
客户物料编号 CUSTOMER P/N		客户规格型号 DESCRIPTION	9×5×3, 0.4-line, 6TS, vertical base, 3×6, leather-yellow, twisted, 330 UH
我司物料编号 OUR PART NO	XRT953B36-331MVSYL4	我司品名 OUR PART NAME	Magnetic ring common mode choke

修订记录 Revision record

日期 Date	修改内容 Modify the content	审核 Checked	确认 Approved
2026/1/15	首次发行First issue	Zhong cuilan	Huang chuangen
2026/10/20	更新原理图脚位		

产品承认书
SPECIFICATION FOR APPROVAL

客户名称 CUSTOMER		日期 DATE	2026/1/15
客户物料编号 CUSTOMER P/N		客户规格型号 DESCRIPTION	9×5×3, 0.4-line, 6TS, vertical base, 3×6, leather-yellow, twisted, 330 UH
我司物料编号 OUR PART NO	XRT953B36-331MVSYL4	我司品名 OUR PART NAME	Magnetic ring common mode choke

外观尺寸 Appearance of size

单位 Unit：mm

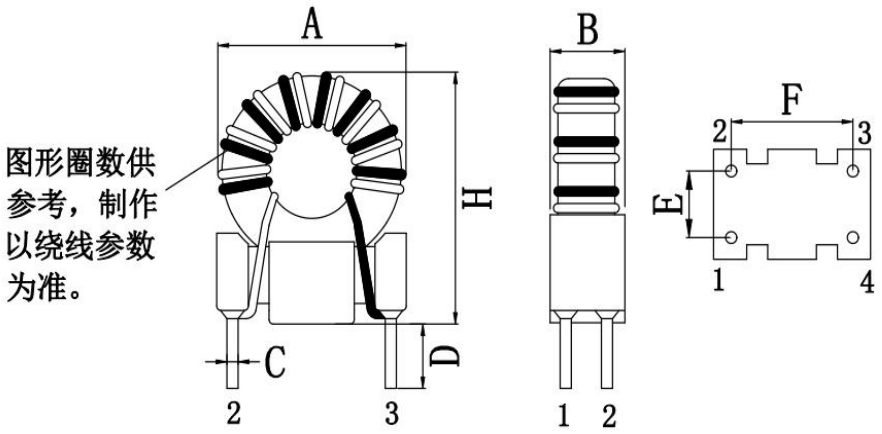

A	11.5MAX	C	0.4±0.05	E	3.0REF	H	12.5±0.5
B	7.2±0.5	D	3.5±1.0	F	6.0REF		
标识Identification							

(以上尺寸为手工测量只做参考详细尺寸以实物为准 ）The above dimensions are measured by hand for reference only.The detailed dimensions are subject to the physical objects.

电路图 Schematic Diagram：

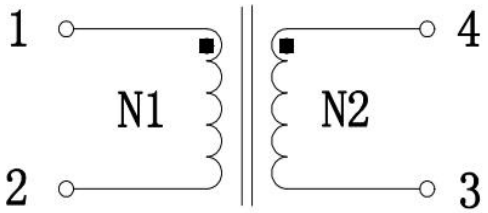

绕线结构表 Winding Structure Diagram

绕组 WINDING	起始 S	结束 F	绝缘线/漆包线 WIRE	圈数 TURNS		绕制方式 WINDINGWAY		
N1	1	2	2UEW Φ0.4㎜	6TS	refer to			
N2	4	3	2UEW Φ0.4㎜	6TS	refer to			

注意事项 Matters needing attention：

1、排线方式为双线并绕，排线要均匀，美观。 2、PIN脚要光亮

产品承认书
SPECIFICATION FOR APPROVAL

客户名称 CUSTOMER		日期 DATE	2026/1/15
客户物料编号 CUSTOMER P/N		客户规格型号 DESCRIPTION	9×5×3, 0.4-line, 6TS, vertical base, 3×6, leather-yellow, twisted, 330 UH
我司物料编号 OUR PART NO	XRT953B36-331MVSYL4	我司品名 OUR PART NAME	Magnetic ring common mode choke

电性参数 Electrical parameters

测试项目 TEST PROJECT	电性范围 SPEC	测试条件 TEST FREQ	测试仪器 TEST STRUMENTS
电感量L1	> 330uH	at 25℃ 1KHz/0.3V	TH2829A
电感量L2	> 330uH	at 25℃ 1KHz/0.3V	TH2829A
额定电流Irms	1.2A（±5%）	at 25℃ 1KHz/0.3V	E1412A
峰值（瞬间）电流	1.2A-4A（±5%）	at 25℃	TH2829A

测试报告 The test report

测试项目 Test project	电性范围 Spec	测试结果 Test result				
		1	2	3	4	5
电感量L1	> 330uH	OK	OK	OK	OK	OK
电感量L2	> 330uH	OK	OK	OK	OK	OK
额定电流Irms	1.2A（±5%）	OK	OK	OK	OK	OK
峰值（瞬间）电流	1.2A-4A（±5%）	OK	OK	OK	OK	OK

测试室温/湿度: 室温: 25℃(REF) 相对湿度: 80%(REF)
TEST CONDITION:TEMP:25℃(REF) R.H.: 80%(REF)

NO	project	Technical requirement	结论
1	Appearance and size	Meet product specifications and tolerance requirements.	OK
2			

制表 MADE	审核 CHECKED	批准 APPROVED
HuFangting	RaoPing	ZhongCuilan

注意事项
Matters needing attention

1、本公司产品适用于 AV 设备、OA 设备、家电、信息服务等一般电子设备中。

Our products are designed and promoted for use in general electronic devices such as audio-video equipment, office automation equipment, home appliance and information service.

2、当本公司的产品使用在一般电子设备以外的领域时，对于此所引发的设备失效我司将不承担任何法律责任。

In case of using the product for the purpose other than general electronics devices, we shall not be held liable for any dysfunctions in or damage to the equipment with which the product is used.

3、本承认书只保证我司产品作为一个单体时的质量情况，当我司产品被安装到贵司产品上时，请贵司对使用在贵司电路上的产品情况进行了有效评价和确认。

Our specification limits the quality of the component as a single unit. Please ensure the component is thoroughly evaluated in your application circuit.

4、不要对产品施加过大的振动或机械冲击；

Do not apply excessive vibration or mechanical shock to products.

5、为防止断线，请不要使用锋利的物体接触线圈，如镊子；

Do not touch wire with sharp objects such as tweezers to prevent wire breakage.

6、在产品贴装时不要使用过大的压力，避免磁芯断裂。

Do not apply excessive stress to products mounted on boards to prevent core breakage.

7、为保证端子电极的焊接特性和包装材料处于良好状态，请于本公司发货后 6 个月内使用本产品。同时，由于端子电极的焊接特性会随时间发生变化，如果贮存时间超过 6 个月，请首先确认其焊接特性后再安装使用。

To maintain the solderability of terminal electrodes and to keep the packing material in good condition, product should be used within 6 months from the time of delivery. And the solderability of products electrodes may decrease as time passes, so in case of storage over 6 months, solderability shall be checked

8、存放货物的仓库应满足以下条件 **Store products in a warehouse in compliance with the following condition:**

条件 Conditions	元件含包装物 Packing status	元件自身 Component itself
温度 Temperature	-25~+40℃	-25~+85℃
湿度 Humidity	30~70%RH	30~70%RH

9、不要使产品遭受温度和湿度的快速变化。

Do not subject products to rapid changes in temperature and humidity.

10、不要将产品存放在化学环境中，如硫酸气体或碱性气体中，否则会降低电极端子的焊接特性和使电感器腐蚀。

Do not store the products in chemical atmosphere such as one containing sulfurous acid gas or alkaline gas, that will causes poor solderability and corrosion of inductors.

11、为了避免受潮气、灰尘等物质的影响，产品应保管于货架上。

Store products on pallets to protect from humidity, dust, etc

12、产品应避免热冲击、振动以及直接光照等等。

Avoid heat shock, vibration, direct sunlight, etc.