TPS25981x 2.7 V – 16 V, 10-A, 6-mΩ eFuse with Transient Overcurrent Blanking Timer

1 Features

- Wide operating input voltage range: 2.7 V to 16 V
  - 20-V absolute maximum
- Integrated FET with low on-resistance: R_{ON} = 6 mΩ (typ.)
- Fast overvoltage protection
  - Adjustable overvoltage lockout (OVLO) with 1.2-µs (typ.) response time
- Overcurrent protection with load current monitor output (ILM)
  - Circuit-breaker response
  - Adjustable threshold (I_{LIM}) 1.5 A – 11 A
    - ±10% accuracy for I_{LIM} > 5 A
  - Adjustable transient blanking timer (ITIMER) to allow peak currents up to 2 × I_{LIM}
  - Output load current monitor accuracy: ±10% (I_{OUT} ≥ 3 A)
- Fast-trip response for short-circuit protection
  - 640-ns (typ.) response time
  - Adjustable (2 × I_{LIM}) and fixed thresholds
- Active high enable input with adjustable undervoltage lockout threshold (UVLO)
- Active low enable input with adjustable undervoltage lockout threshold (OVLO)
- Adjustable output slew rate control (dVdt)
- Option to drive external FET for reverse current blocking in disabled/OFF state
- Overtemperature protection
- Quick Output Discharge
- Digital outputs
  - Power Good (PG) and fault indication ($\overline{FLT}$)
- UL 2367 recognition (pending)
- IEC 62368 CB certification (pending)
- Small footprint: QFN 2-mm × 2-mm, 0.45-mm pitch

2 Applications

- Optical modules
- Server/PC motherboard/add-on cards
- Enterprise routers/data center switches
- Industrial PC
- UHDTV

3 Description

The TPS25981xx family of eFuses is a highly integrated circuit protection and power management solution in a small package. The devices provide multiple protection modes using very few external components and are a robust defense against overloads, short circuits, voltage surges and excessive inrush current.

Output slew rate and inrush current can be adjusted using a single external capacitor. Loads are protected from input overvoltage conditions by cutting off the output if input exceeds an adjustable overvoltage threshold. The devices respond to output overload by actively limiting the current (during start-up) or breaking the circuit (during steady-state). The overcurrent protection threshold as well as the transient overcurrent blanking timer are user-adjustable. The current limit control pin also functions as an analog load current monitor.

The devices are available in a 2-mm × 2-mm, 10-pin HotRod™ QFN package for improved thermal performance and reduced system footprint.

The devices are characterized for operation over a junction temperature range of –40°C to +125°C.

Device Information

PART NUMBER	PACKAGE(1)	BODY SIZE (NOM)
TPS25981	RPW (VQFN-HR, 10)	2.00 mm × 2.00 mm

(1) For all available packages, see the orderable addendum at the end of the data sheet.

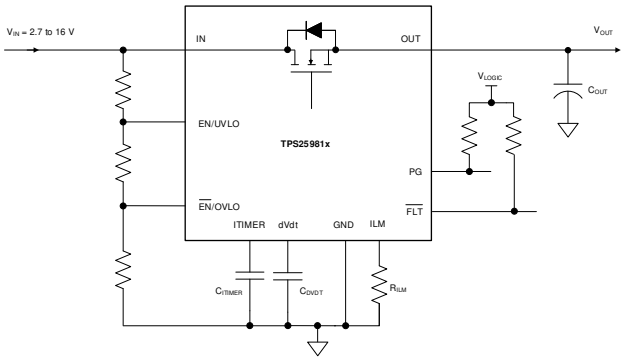

Simplified Schematic

Table of Contents

1 Features....1
2 Applications....1
3 Description....1
4 Revision History....2
5 Device Comparison Table....3
6 Pin Configuration and Functions....4
7 Specifications....6
7.1 Absolute Maximum Ratings....6
7.2 ESD Ratings....6
7.3 Recommended Operating Conditions....6
7.4 Thermal Information....7
7.5 Electrical Characteristics....8
7.6 Timing Requirements....9
7.7 Switching Characteristics....10
7.8 Typical Characteristics....11
8 Detailed Description....18
8.1 Overview....18
8.2 Functional Block Diagram....19
8.3 Feature Description....20
8.4 Device Functional Modes....30
9 Application and Implementation....31
9.1 Application Information....31
9.2 Typical Application....34
10 Power Supply Recommendations....39
10.1 Transient Protection....39
10.2 Output Short-Circuit Measurements....40
11 Layout....41
11.1 Layout Guidelines....41
11.2 Layout Example....42
12 Device and Documentation Support....43
12.1 Documentation Support....43
12.2 Receiving Notification of Documentation Updates....43
12.3 Support Resources....43
12.4 Trademarks....43
12.5 Electrostatic Discharge Caution....43
12.6 Glossary....43
13 Mechanical, Packaging, and Orderable Information....44

4 Revision History

NOTE: Page numbers for previous revisions may differ from page numbers in the current version.

Changes from Revision A (July 2022) to Revision B (June 2023)	Page
• Added "Option to drive external FET for reverse current"	1
• Added variants TPS259813ARPW and TPS259813LRPW	3
• Updated the description of the DVDT pin	4
• Updated image formatting	11
• Updated image	19
• Updated Figure 8-7	27
• Added Section 8.3.9	29

Changes from Revision * (April 2022) to Revision A (July 2022)	Page
• Changed status from "Advance Information" to "Production Data"	1

Copyright © 2023 Texas Instruments Incorporated

5 Device Comparison Table

Part Number	Overvoltage Response	Overcurrent Response	Reverse Current Blocking FET driver	Response to Fault
TPS259814ARPW	Adjustable OVLO	Circuit-Breaker	No	Auto-Retry
TPS259814LRPW				Latch-Off
TPS259813ARPW			Yes	Auto-Retry
TPS259813LRPW				Latch-Off

Copyright © 2023 Texas Instruments Incorporated

6 Pin Configuration and Functions

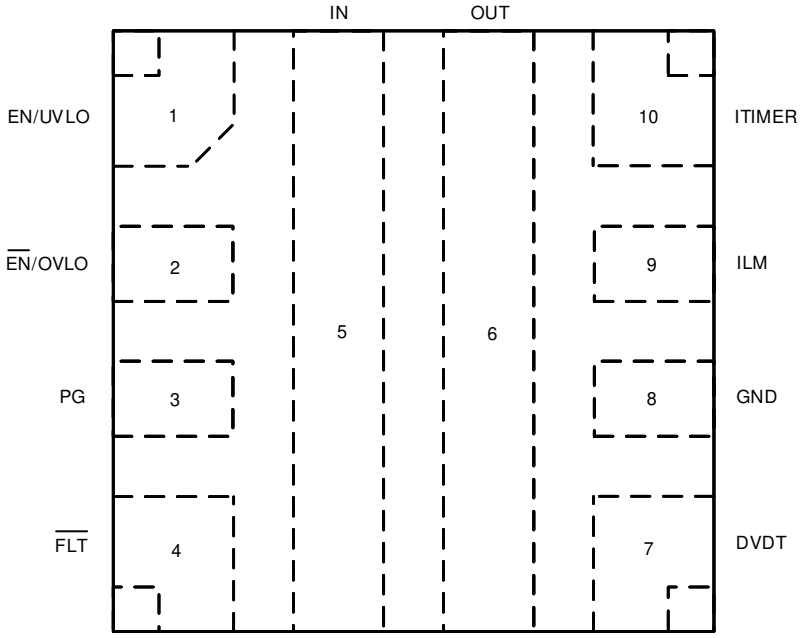

Figure 6-1. TPS25981xx RPW Package 10-Pin QFN Top View

Table 6-1. Pin Functions

PIN		TYPE	DESCRIPTION
NAME	NO.		
EN/UVLO	1	Analog Input	Active high enable for the device. A resistor divider on this pin from input supply to GND can be used to adjust the undervoltage lockout threshold. *Do not leave floating.* Refer to *Undervoltage Lockout (UVLO and UVP)* for details.
$\overline{EN}$/OVLO	2	Analog Input	A resistor divider on this pin from supply to GND can be used to adjust the overvoltage lockout threshold. This pin can also be used as an Active low enable for the device. *Do not leave floating.* Refer to *Overvoltage Lockout (OVLO)* for details.
PG	3	Digital Output	Power Good indication. This pin is an open-drain signal which is asserted high when the power FET has fully turned ON and is ready to deliver power. Refer to *Power Good (PG)* for more details.
$\overline{FLT}$	4	Digital Output	Active low fault event indicator. This pin is an open-drain signal which is pulled low when a fault is detected. Refer to *Fault Response and Indication ($\overline{FLT}$)* for more details.
IN	5	Power	Power input
OUT	6	Power	Power output
DVDT	7	Analog Output	A capacitor from this pin to GND sets the output turn on slew rate. Leave this pin floating for the fastest turn-on slew rate. Refer to *Slew Rate (dVdt) and Inrush Current Control* for details. Only for TPS259813x variants, this pin can also be used to drive an external FET to implement reverse current blocking. Please refer to *Reverse Current Blocking FET Driver* for more details.
GND	8	Ground	This pin is the ground reference for all internal circuits and must be connected to system GND.
ILM	9	Analog Output	This pin is a dual function pin used to limit and monitor the output current. An external resistor from this pin to GND sets the overcurrent protection threshold during start-up as well as steady-state. The pin voltage can also be used as analog output load current monitor signal. *Do not leave floating.* Refer to *Circuit-Breaker During Steady-state* or *Active Current Limiting During Start-up* for more details.

Copyright © 2023 Texas Instruments Incorporated

Table 6-1. Pin Functions (continued)

PIN		TYPE	DESCRIPTION
NAME	NO.		
ITIMER	10	Analog Output	A capacitor from this pin to GND sets the overcurrent blanking interval during which the output current can temporarily exceed set current limit (but lower than fast-trip threshold) during steady-state before the device overcurrent response takes action. Leave this pin open for fastest response to overcurrent events. Refer to *Circuit-Breaker During Steady-state* for more details.

Copyright © 2023 Texas Instruments Incorporated

7 Specifications

7.1 Absolute Maximum Ratings

over operating free-air temperature range (unless otherwise noted)(1)

Parameter		Pin	MIN	MAX	UNIT
V_{IN}	Maximum input voltage range, –40°C ≤ T_J ≤ 125°C	IN	–0.3	20	V
V_{OUT}	Maximum output voltage range, –40°C ≤ T_J ≤ 125°C	OUT	–0.3	V_{IN} + 0.3	
$V_{OUT,PLS}$	Minimum output voltage pulse (< 1 µs)	OUT	–0.8		
$V_{EN/UVLO}$	Maximum Enable pin voltage range	EN/UVLO	–0.3	6.5	V
V_{OV}	Maximum $\overline{EN}$/OVLO pin voltage range	$\overline{EN}$/OVLO	–0.3	6.5	V
V_{dVdT}	Maximum dVdT pin voltage range	dVdt	Internally limited		V
V_{ITIMER}	Maximum ITIMER pin voltage range	ITIMER	Internally limited		V
V_{PG}	Maximum PG pin voltage range	PG	–0.3	6.5	V
V_{FLTB}	Maximum $\overline{FLT}$ pin voltage range	$\overline{FLT}$	–0.3	6.5	V
V_{ILM}	Maximum ILM pin voltage range	ILM	Internally limited		V
I_{MAX}	Maximum continuous switch current	IN to OUT	Internally limited		A
T_J	Junction temperature		Internally limited		°C
T_{LEAD}	Maximum lead temperature			300	°C
T_{stg}	Storage temperature		–65	150	°C

(1) Operation outside the Absolute Maximum Ratings may cause permanent device damage. Absolute Maximum Ratings do not imply functional operation of the device at these or any other conditions beyond those listed under Recommended Operating Conditions. If used outside the Recommended Operating Conditions but within the Absolute Maximum Ratings, the device may not be fully functional, and this may affect device reliability, functionality, performance, and shorten the device lifetime.

7.2 ESD Ratings

			VALUE	UNIT
$V_{(ESD)}$	Electrostatic discharge	Human body model (HBM), per ANSI/ESDA/JEDEC JS-001(1)	±2000	V
		Charged device model (CDM), per ANSI/ESDA/JEDEC JS-002(2)	±500	

(1) JEDEC document JEP155 states that 500-V HBM allows safe manufacturing with a standard ESD control process.
(2) JEDEC document JEP157 states that 250-V CDM allows safe manufacturing with a standard ESD control process.

7.3 Recommended Operating Conditions

over operating free-air temperature range (unless otherwise noted)

Parameter		Pin	MIN	MAX	UNIT
V_{IN}	Input voltage range	IN	2.7	16	V
V_{OUT}	Output voltage range	OUT		V_{IN}	V
$V_{EN/UVLO}$	EN/UVLO pin voltage range	EN/UVLO		5(1)	V
V_{OV}	$\overline{EN}$/OVLO pin voltage range	$\overline{EN}$/OVLO	0.5	1.5	V
V_{dVdT}	dVdT pin capacitor voltage rating	dVdt	V_{IN} + 5 V		V
V_{FLTB}	$\overline{FLT}$ pin voltage range	$\overline{FLT}$		5	V
V_{PG}	PG pin voltage range	PG		5	V
V_{ITIMER}	ITIMER pin capacitor voltage rating	ITIMER	4		V
R_{ILM}	ILM pin resistance to GND	ILM	600	4400	Ω
I_{MAX}	Continuous switch current, T_J ≤ 125°C	IN to OUT		10	A

Copyright © 2023 Texas Instruments Incorporated

7.3 Recommended Operating Conditions (continued)

over operating free-air temperature range (unless otherwise noted)

Parameter		Pin	MIN	MAX	UNIT
T_J	Junction temperature		–40	125	°C

(1) For supply voltages below 5V, it is okay to pull up the EN pin to IN directly. For supply voltages greater than 5V , it is recommended to use a resistor divider with minimum pull-up resistor value of 350 kΩ.

7.4 Thermal Information

THERMAL METRIC (1)		TPS25981xx RPW (QFN) 10 PINS	UNIT
$R_{\theta JA}$	Junction-to-ambient thermal resistance	49.7(2)	°C/W
		71.8(3)	°C/W
$R_{\theta JB}$	Junction-to-board thermal resistance	15.7	°C/W
Ψ_{JT}	Junction-to-top characterization parameter	2.1(2)	°C/W
	Junction-to-top characterization parameter	1.3(3)	°C/W
Ψ_{JB}	Junction-to-board characterization parameter	23 (2)	°C/W
		14.5 (3)	°C/W

(1) For more information about traditional and new thermal metrics, see the Semiconductor and IC Package Thermal Metrics application report.
(2) Based on simulations conducted with the device mounted on a custom 4-layer PCB (2s2p) with 8 thermal vias under device
(3) Based on simulations conducted with the device mounted on a JEDEC 4-layer PCB (2s2p) with no thermal vias under device

Copyright © 2023 Texas Instruments Incorporated

7.5 Electrical Characteristics

(Test conditions unless otherwise noted) –40°C ≤ T_J ≤ 125°C, V_{IN} = 12 V, OUT = Open, $V_{EN/UVLO}$ = 2 V, V_{OVLO} = 0 V, R_{ILM} = 611 Ω , dVdT = Open, ITIMER = Open, $\overline{FLT}$ = Open, PG = Open. All voltages referenced to GND.

Test Parameter	Description	MIN	TYP	MAX	UNITS
INPUT SUPPLY (IN)					
$I_{Q(ON)}$	IN supply quiescent current		417	610	µA
$I_{Q(OFF)}$	IN supply OFF state current ($V_{SD(F)}$ < V_{EN} < $V_{UVLO(F)}$)		68	90	µA
I_{SD}	IN supply shutdown current (V_{EN} < $V_{SD(F)}$)		3	25	µA
$V_{UVP(R)}$	IN supply UVP rising threshold	2.44	2.53	2.64	V
$V_{UVP(F)}$	IN supply UVP falling threshold	2.35	2.42	2.55	V
OUTPUT LOAD CURRENT MONITOR (ILM)					
G_{IMON}	Analog load current monitor gain (I_{MON} : I_{OUT}), I_{OUT} = 1.5 A, I_{OUT} < I_{LIM}	82.9	95.3	107.6	µA/A
	Analog load current monitor gain (I_{MON} : I_{OUT}), I_{OUT} = 3 A, I_{OUT} < I_{LIM}	87	95.3	104.5	µA/A
	Analog load current monitor gain (I_{MON} : I_{OUT}), I_{OUT} = 4.5 A, I_{OUT} < I_{LIM}	87.6	95.3	103.1	µA/A
	Analog load current monitor gain (I_{MON} : I_{OUT}), I_{OUT} = 8 A, I_{OUT} < I_{LIM}	87.7	95.3	102.6	µA/A
	Analog load current monitor gain (I_{MON} : I_{OUT}), I_{OUT} = 10 A, I_{OUT} < I_{LIM}	87.8	95.3	102.4	µA/A
OVERCURRENT PROTECTION (OUT)					
I_{LIM}	Overcurrent threshold, R_{ILM} = 3320 Ω	1.72	1.99	2.26	A
	Overcurrent threshold, R_{ILM} = 2212 Ω	2.64	2.98	3.32	A
	Overcurrent threshold, R_{ILM} = 1102 kΩ	5.43	5.98	6.52	A
	Overcurrent threshold, R_{ILM} = 750 Ω	7.95	8.73	9.52	A
	Overcurrent threshold, R_{ILM} = 611 Ω	9.8	10.76	11.73	A
I_{SPFLT}	Circuit-Breaker threshold, ILM pin open (Single point failure)			0.1	A
I_{SPFLT}	Circuit-Breaker threshold, ILM pin shorted to GND (Single point failure)		2.24	3.3	A
I_{FT}	Fixed fast-trip current threshold		39.5		A
I_{SCGain}	Scalable fast-trip threshold (I_{SC}) : I_{LIM} ratio	170	193	242	%
V_{FB}	V_{OUT} threshold to exit current limit foldback	1.55	1.91	2.23	V
ON RESISTANCE (IN - OUT)					
R_{ON}	2.7 ≤ V_{IN} ≤ 4 V, I_{OUT} = 3 A, T_J = 25°C		6.07		mΩ
	4 < V_{IN} ≤ 16 V, I_{OUT} = 3 A, T_J = 25°C		5.81		mΩ
	2.7 ≤ V_{IN} ≤ 16 V, I_{OUT} = 3 A, –40°C ≤ T_J ≤ 125°C			8.4	mΩ
ENABLE/UNDERVOLTAGE LOCKOUT (EN/UVLO)					
$V_{UVLO(R)}$	EN/UVLO rising threshold	1.176	1.20	1.224	V
$V_{UVLO(F)}$	EN/UVLO falling threshold	1.073	1.09	1.116	V
$V_{SD(F)}$	EN/UVLO falling threshold for lowest shutdown current	0.45	0.75		V
I_{ENLKG}	EN/UVLO pin leakage current	–0.1		0.1	µA
OVERVOLTAGE LOCKOUT ($\overline{EN}$/OVLO)					
$V_{OV(R)}$	OVLO rising threshold	1.176	1.20	1.224	V
$V_{OV(F)}$	OVLO falling threshold	1.074	1.09	1.116	V
I_{OVLKG}	OVLO pin leakage current (0.5 V < V_{OVLO} < 1.5 V)	–0.1		0.1	µA
OVERCURRENT FAULT TIMER (ITIMER)					
I_{ITIMER}	ITIMER pin internal discharge current, I_{OUT} > I_{LIM}	1.25	2	2.72	µA

Copyright © 2023 Texas Instruments Incorporated

7.5 Electrical Characteristics (continued)

(Test conditions unless otherwise noted) –40°C ≤ T_J ≤ 125°C, V_{IN} = 12 V, OUT = Open, $V_{EN/UVLO}$ = 2 V, V_{OVLO} = 0 V, R_{ILM} = 611 Ω , dVdT = Open, ITIMER = Open, $\overline{FLT}$ = Open, PG = Open. All voltages referenced to GND.

Test Parameter	Description	MIN	TYP	MAX	UNITS
R_{ITIMER}	ITIMER pin internal pullup resistance		15.4		kΩ
V_{INT}	ITIMER pin internal pullup voltage	2.1	2.57	2.74	V
$V_{ITIMER(F)}$	ITIMER comparator threshold, I_{OUT} > I_{LIM}	0.6	1.06	1.37	V
ΔV_{ITIMER}	ITIMER discharge differential voltage threshold, I_{OUT} > I_{LIM}	1.28	1.51	1.74	V
POWER GOOD INDICATION (PG)					
V_{PGD}	PG pin voltage while de-asserted. V_{IN} < $V_{UVP(F)}$, V_{EN} < $V_{SD(F)}$, Weak pullup (I_{PG} = 26 µA)		0.66	0.80	V
	PG pin voltage while de-asserted. V_{IN} < $V_{UVP(F)}$, V_{EN} < $V_{SD(F)}$, Strong pullup (I_{PG} = 242 µA)		0.78	0.90	V
	PG pin voltage while de-asserted, V_{IN} > $V_{UVP(R)}$		0	0.60	V
I_{PGLKG}	PG pin leakage current, PG asserted			3	µA
R_{FLTB}	$\overline{FLT}$ pin internal pulldown resistance		12.57		Ω
FAULT INDICATION ($\overline{FLT}$)					
I_{FLTLKG}	$\overline{FLT}$ pin leakage current	–1		1	µA
OVERTEMPERATURE PROTECTION (OTP)					
TSD	Thermal Shutdown rising threshold, T_J↑		154		°C
TSD_{HYS}	Thermal Shutdown hysteresis, T_J↓		10		°C
DVDT					
I_{dVdt}	dVdt pin internal charging current	1.4	3.45	5.7	µA
QUICK OUTPUT DISCHARGE (OUT)					
R_{QOD}	Quick Output Discharge Resistance, V_{EN} < $V_{UVLO(F)}$	455	488	530	Ω

7.6 Timing Requirements

PARAMETER		TEST CONDITIONS	MIN	TYP	MAX	UNIT
t_{OVLO}	Overvoltage lock-out response time	V_{OVLO} > $V_{OV(R)}$ to V_{OUT}↓		1.2		µs
t_{CB}	Circuit-Breaker response time	ITIMER = Open, I_{OUT} > I_{LIM} + 30% to V_{OUT}↓		1.8		µs
t_{SC}	Short-circuit response time	I_{OUT} > 3 × I_{LIM} to output current cut off		640		ns
t_{FT}	Fixed fast-trip response time	I_{OUT} > I_{FT} to I_{OUT}↓		640		ns
$t_{TSD,RST}$	Thermal Shutdown auto-retry Interval	Device enabled and T_J < TSD – TSD_{HYS}		105		ms
t_{PGA}	PG assertion de-glitch time			14		µs
t_{PGD}	PG de-assertion de-glitch time			14		µs

Copyright © 2023 Texas Instruments Incorporated

7.7 Switching Characteristics

The output rising slew rate is internally controlled and constant across the entire operating voltage range to ensure the turn on timing is not affected by the load conditions. The rising slew rate can be adjusted by adding capacitance from the dVdt pin to ground. As C_{dVdt} is increased it slows the rising slew rate (SR). See Slew Rate and Inrush Current Control (dVdt) section for more details. The Turn-Off Delay and Fall Time, however, are dependent on the RC time constant of the load capacitance (C_{OUT}) and Load Resistance (R_L). The Switching Characteristics are only valid for the power-up sequence where the supply is available in steady-state condition and the load voltage is completely discharged before the device is enabled. Typical values are taken at T_J = 25°C unless specifically noted otherwise. R_L = 100 Ω, C_{OUT} = 1 µF.

PARAMETER		V_{IN}	C_{dVdt} = Open	C_{dVdt} = 1800 pF	C_{dVdt} = 3300 pF	UNITS
SR_{ON}	Output rising slew rate	2.7 V	8.19	1.30	0.78	V/ms
		5 V	11.28	1.42	0.84	
		12 V	19.71	1.68	0.98	
$t_{D,ON}$	Turn-on delay	2.7 V	0.14	0.46	0.70	ms
		5 V	0.14	0.60	0.96	
		12 V	0.14	0.93	1.57	
t_R	Rise time	2.7 V	0.26	1.66	2.77	ms
		5 V	0.36	2.82	4.78	
		12 V	0.49	5.74	9.84	
t_{ON}	Turn-on time	2.7 V	0.40	2.11	3.47	ms
		5 V	0.50	3.42	5.74	
		12 V	0.63	6.67	11.41	
$t_{D,OFF}$	Turn-off delay	2.7 V	24.90	24.90	24.90	µs
		5 V	21.10	21.10	21.10	
		12 V	18.80	18.80	18.80	

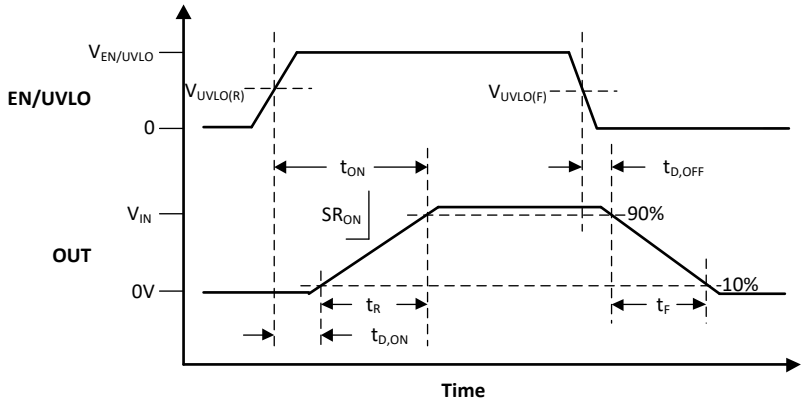

Figure 7-1. TPS25981xx Switching Times

Copyright © 2023 Texas Instruments Incorporated

7.8 Typical Characteristics

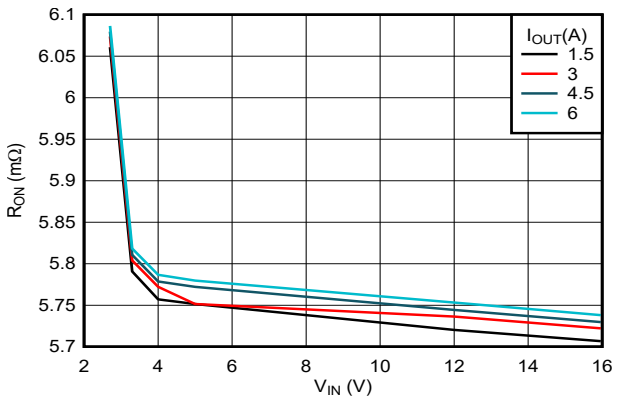

Figure 7-2. ON-Resistance vs Supply Voltage (T_A = 25°C)

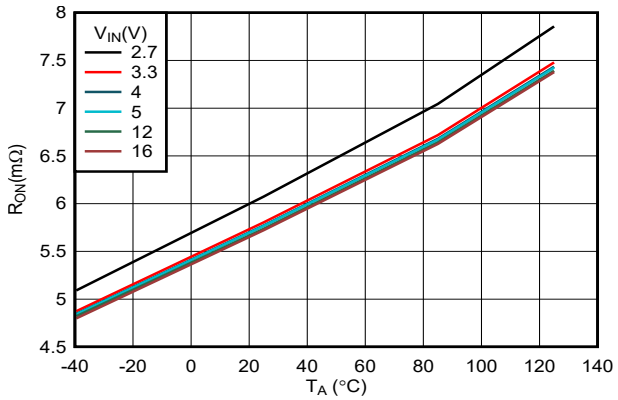

Figure 7-3. ON-Resistance vs Temperature (I_{OUT} = 3 A)

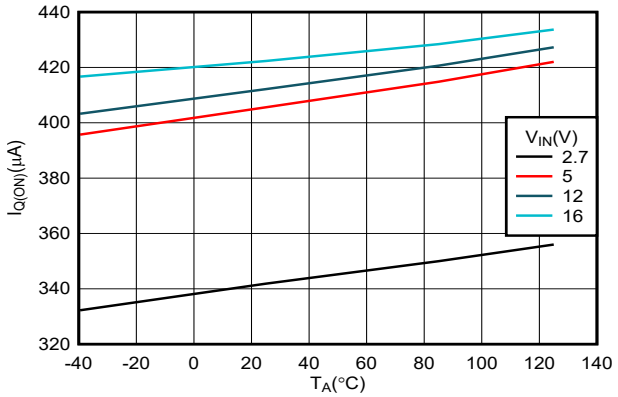

Figure 7-4. IN Quiescent Current vs Temperature

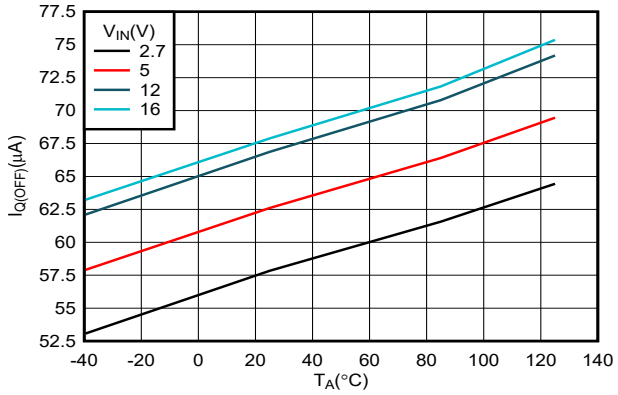

Figure 7-5. IN OFF State (UVLO) Current vs Temperature

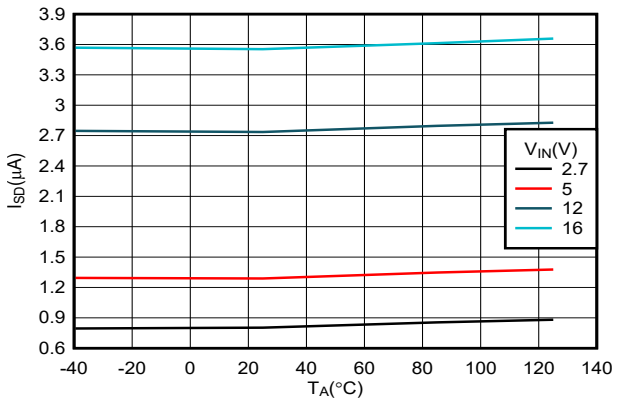

Figure 7-6. IN Shutdown Current vs Temperature

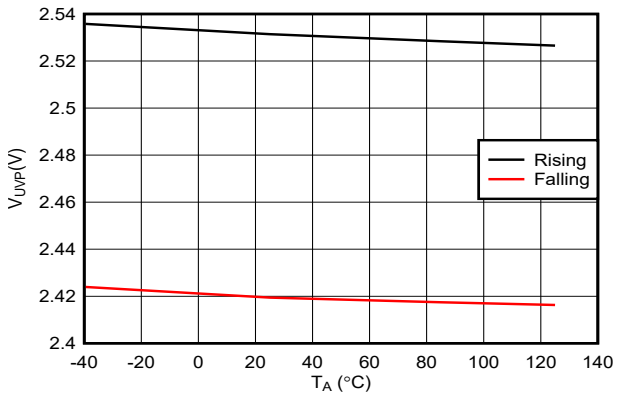

Figure 7-7. IN Undervoltage Threshold vs Temperature

7.8 Typical Characteristics (continued)

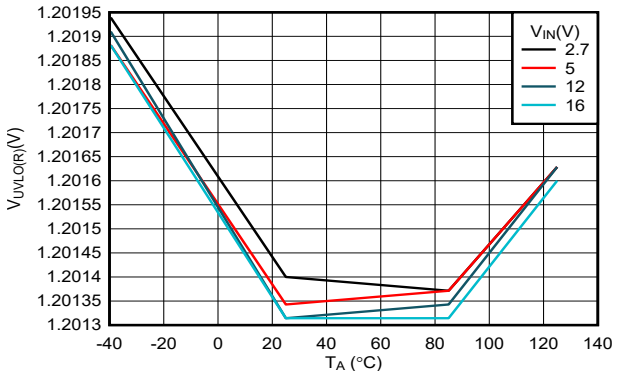

Figure 7-8. EN/UVLO Rising Threshold vs Temperature

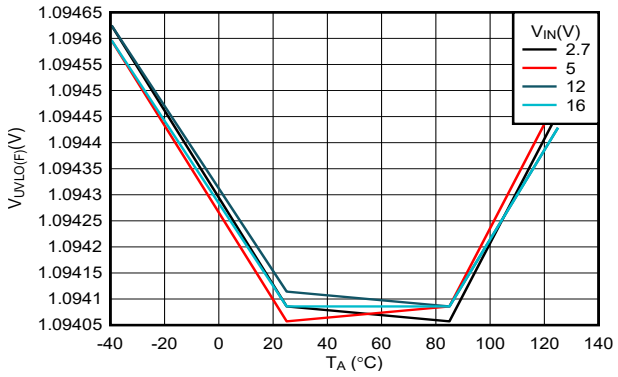

Figure 7-9. EN/UVLO Falling Threshold vs Temperature

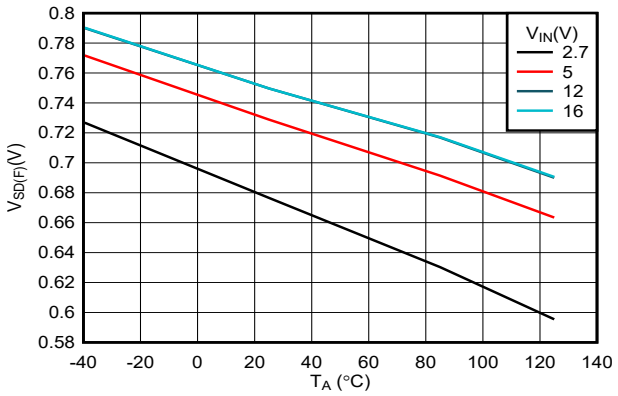

Figure 7-10. EN/UVLO Shutdown Falling Threshold vs Temperature

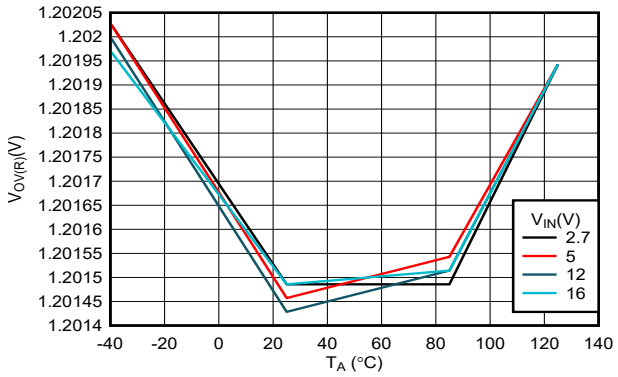

Figure 7-11. OVLO Rising Threshold vs Temperature

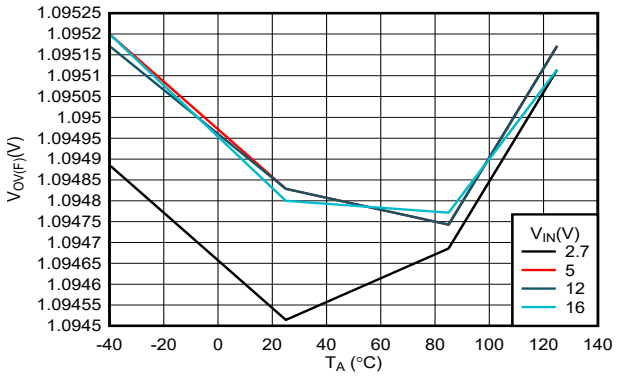

Figure 7-12. OVLO Falling Threshold vs Temperature

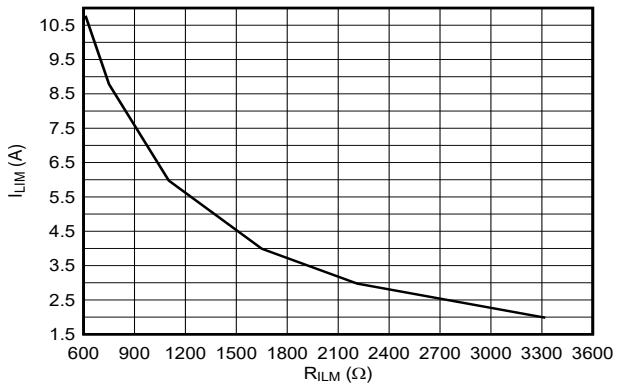

Figure 7-13. Overcurrent Threshold vs ILM Resistor

Copyright © 2023 Texas Instruments Incorporated

7.8 Typical Characteristics (continued)

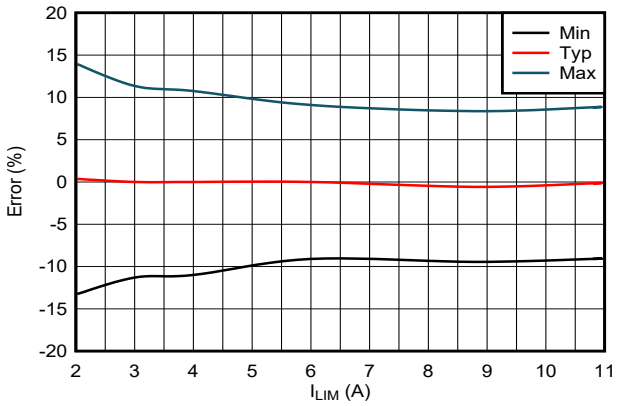

Figure 7-14. Overcurrent Threshold Accuracy (Across Process, Voltage and Temperature)

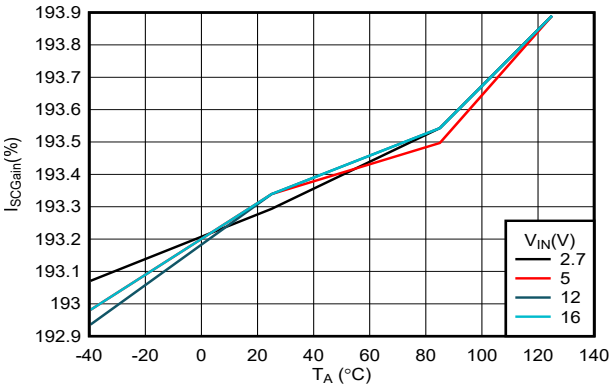

Figure 7-15. Scalable Fast-Trip Threshold: Current Limit Threshold (I_{LIM}) Ratio vs Temperature

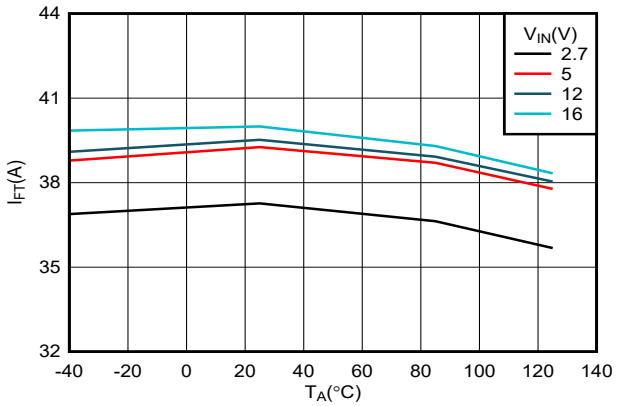

Figure 7-16. Fixed Fast-Trip Threshold vs Temperature

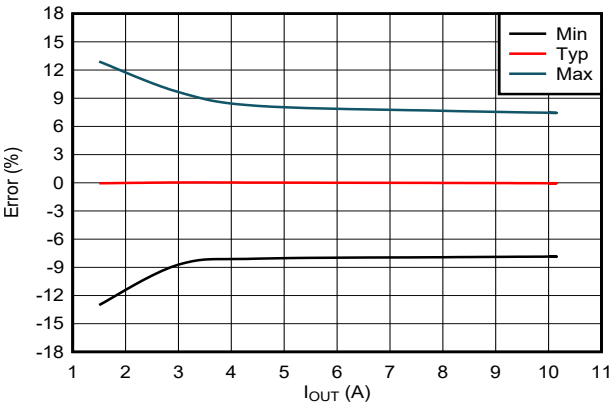

Figure 7-17. Analog Current Monitor Gain Accuracy

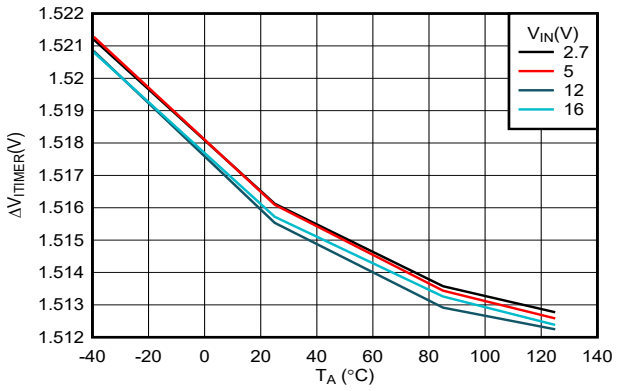

Figure 7-18. ITIMER Discharge Differential Voltage Threshold vs Temperature

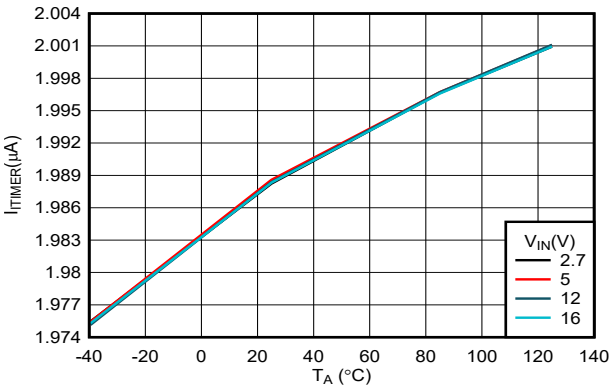

Figure 7-19. ITIMER Discharge Current vs Temperature

Copyright © 2023 Texas Instruments Incorporated

7.8 Typical Characteristics (continued)

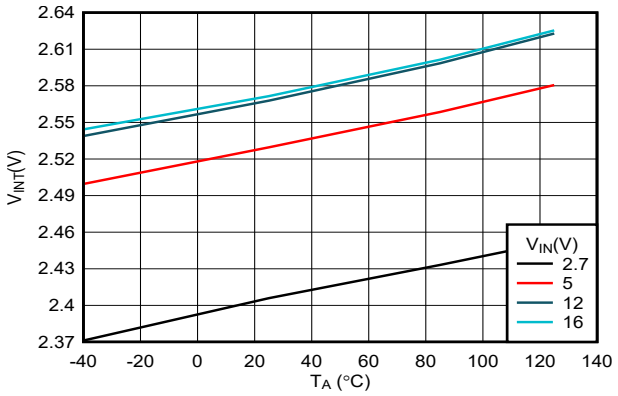

Figure 7-20. ITIMER Internal Pullup Voltage vs Temperature

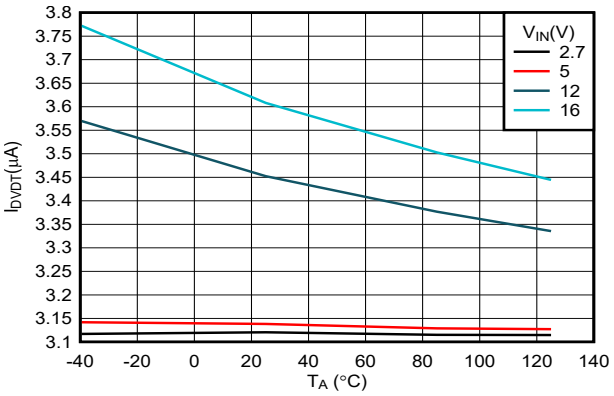

Figure 7-21. DVDT Charging Current vs Temperature

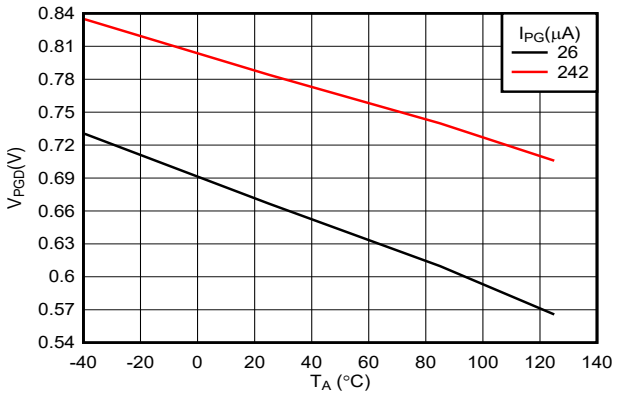

Figure 7-22. PG Pin Voltage vs Temperature (VIN = 0 V)

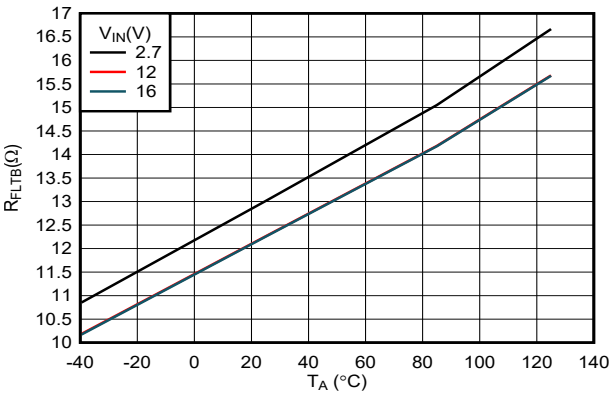

Figure 7-23. $\overline{\text{FLT}}$ Pin Pulldown Resistance vs Temperature

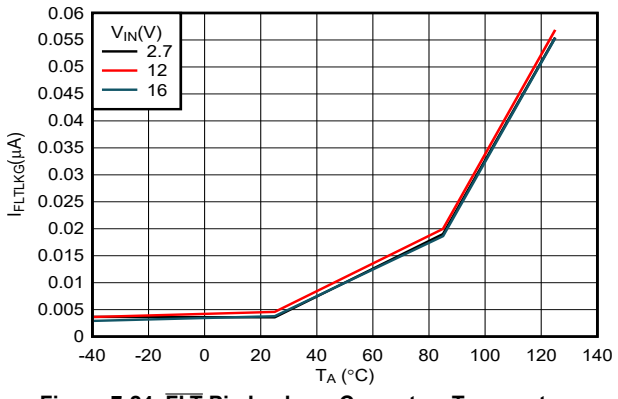

Figure 7-24. $\overline{\text{FLT}}$ Pin Leakage Current vs Temperature

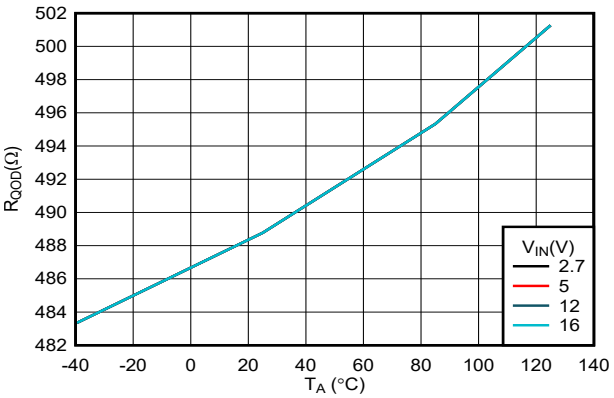

Figure 7-25. Quick Output Discharge Resistance vs Temperature

Copyright © 2023 Texas Instruments Incorporated

7.8 Typical Characteristics (continued)

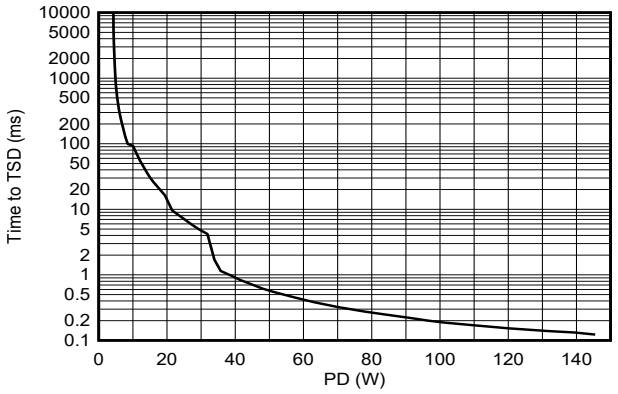

Figure 7-26. Time to Thermal Shutdown During Inrush State

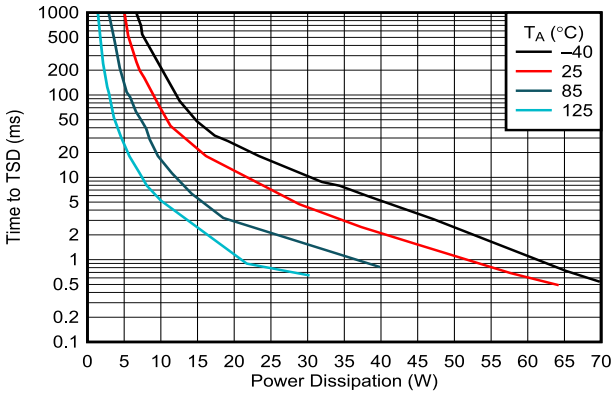

Figure 7-27. Time to Thermal Shutdown During Steady-State

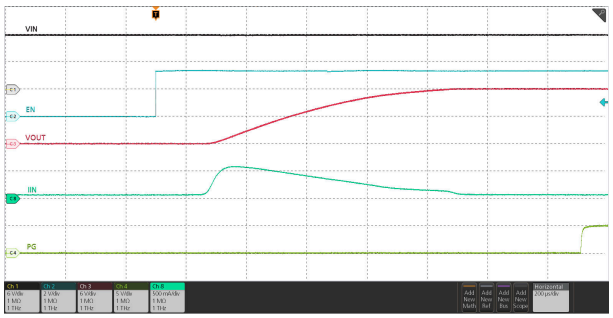

V_{IN} = 12 V, C_{OUT} = 10 µF, C_{dVdt} = Open, $V_{EN/UVLO}$ stepped up to 3.3 V

Figure 7-28. Start-Up with Enable

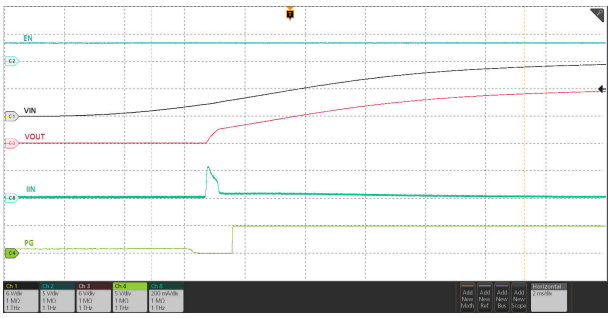

$V_{EN/UVLO}$ = 3.3 V, C_{OUT} = 10 µF, C_{dVdt} = Open, V_{IN} ramped up to 12 V

Figure 7-29. Start-Up with Supply

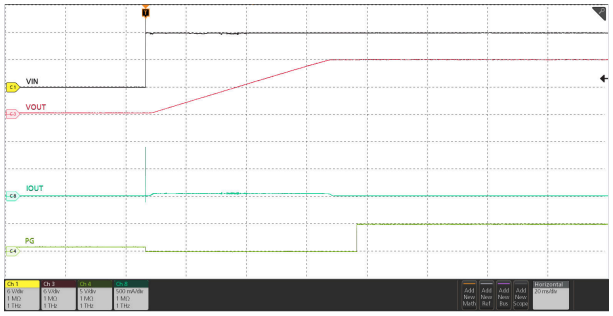

C_{OUT} = 220 µF, C_{dVdt} = 15 nF, EN/UVLO connected to IN through resistor ladder, 12 V hot-plugged to IN

Figure 7-30. Input Hot-Plug

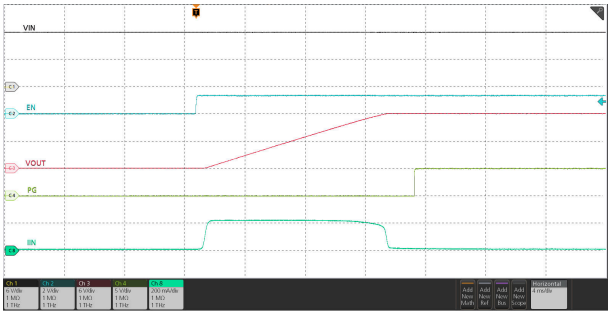

V_{IN} = 12 V, C_{OUT} = 220 µF, C_{dVdt} = 3300 pF, $V_{EN/UVLO}$ stepped up to 1.4 V

Figure 7-31. Inrush Current with Capacitive Load

Copyright © 2023 Texas Instruments Incorporated

7.8 Typical Characteristics (continued)

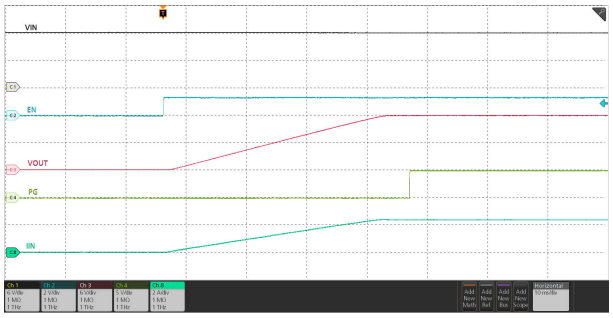

V_{IN} = 12 V, C_{OUT} = 220 µF, R_{OUT} = 5 Ω, C_{dVdt} = 3300 pF, $V_{EN/UVLO}$ stepped up to 1.4 V

Figure 7-32. Inrush Current with Resistive and Capacitive Load

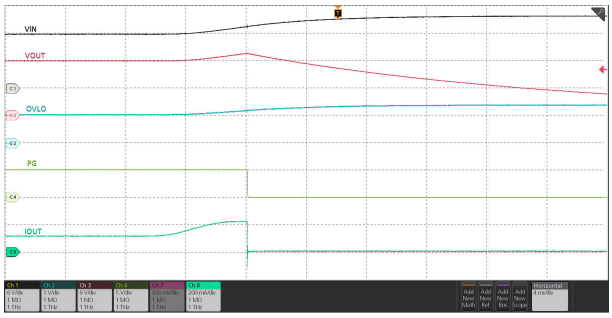

V_{IN} Overvoltage threshold set to 13.6 V using resistor ladder connected to OVLO pin, V_{IN} ramped up from 12 V to 16 V

Figure 7-33. Overvoltage Lockout Response

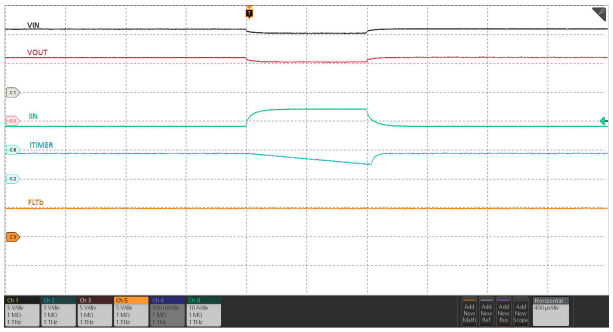

V_{IN} = 12 V, C_{ITIMER} = 1.5 nF, R_{ILM} = 649 Ω, I_{OUT} ramped from 8 A → 14 A→ 8 A within 1 ms

Figure 7-34. Transient Overcurrent Blanking Timer Response

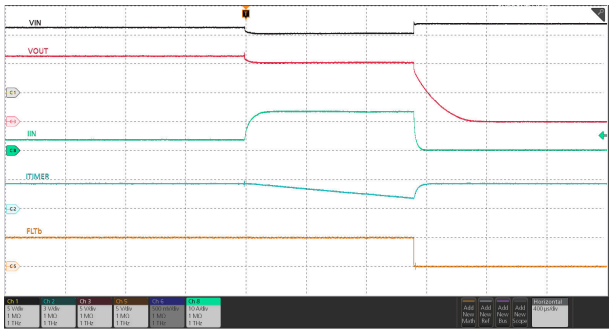

V_{IN} = 12 V, C_{ITIMER} = 1.5 nF, R_{ILM} = 649 Ω, I_{OUT} ramped from 4 A → 13 A

Figure 7-35. Circuit-Breaker Response

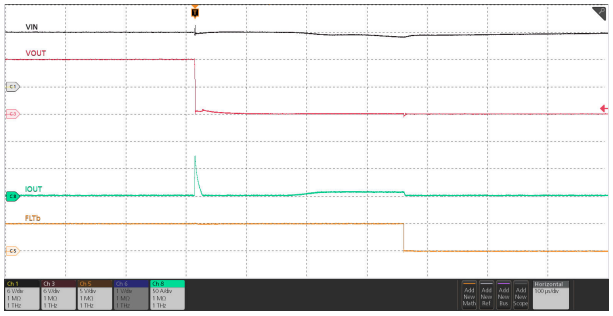

V_{IN} = 12 V, R_{ILM} = 649 Ω, OUT stepped from Open → Short-circuit to GND

Figure 7-36. Output Short-Circuit During Steady-State

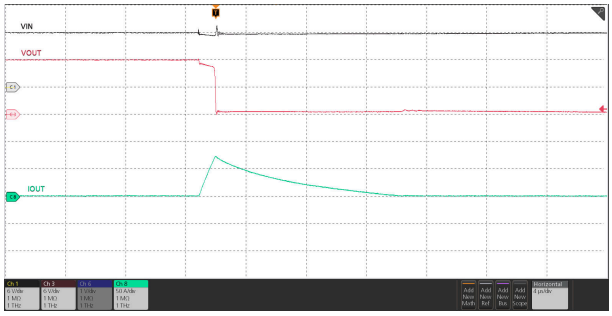

V_{IN} = 12 V, R_{ILM} = 649 Ω, OUT stepped from Open → Short-circuit to GND

Figure 7-37. Output Short-Circuit During Steady-State (Zoomed In)

Copyright © 2023 Texas Instruments Incorporated

7.8 Typical Characteristics (continued)

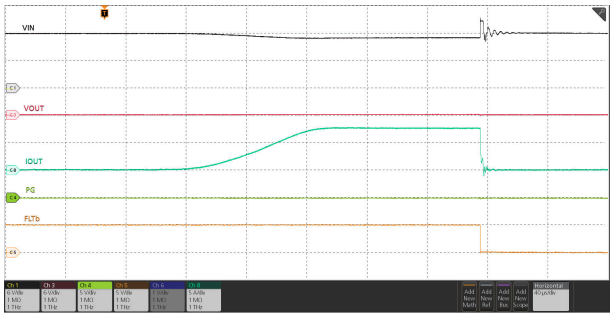

V_{IN} = 12 V, OUT short-circuit to GND, R_{ILM} = 649 Ω, $V_{EN/UVLO}$ stepped from 0 V to 3.3 V

Figure 7-38. Power Up into Short Circuit

8 Detailed Description

8.1 Overview

The TPS25981xx is an eFuse with integrated power path that is used to ensure safe power delivery in a system. The device starts its operation by monitoring the IN bus. When the input supply voltage (V_{IN}) exceeds the Undervoltage Protection threshold (V_{UVP}), the device samples the EN/UVLO pin. A high level (> V_{UVLO}) on this pin enables the internal power path to start conducting and allow current to flow from IN to OUT. When EN/UVLO is held low (< V_{UVLO}), the internal power path is turned off.

After a successful start-up sequence, the device now actively monitors its load current and input voltage, and controls the internal FET to ensure that the user adjustable overcurrent protection threshold (I_{LIM}) is not exceeded and overvoltage spikes are cut-off after they cross the user adjustable overvoltage lockout threshold (V_{OVLO}). The device also provides fast protection against severe overcurrent during short-circuit events. This feature keeps the system safe from harmful levels of voltage and current. At the same time, a user adjustable overcurrent blanking timer allows the system to pass moderate transient peaks in the load current profile without tripping the eFuse. This feature ensures a robust protection solution against real faults which is also immune to transients, thereby ensuring maximum system uptime.

The device also has a built-in thermal sensor based shutdown mechanism to protect itself in case the device temperature (T_J) exceeds the recommended operating conditions.

Copyright © 2023 Texas Instruments Incorporated

8.2 Functional Block Diagram

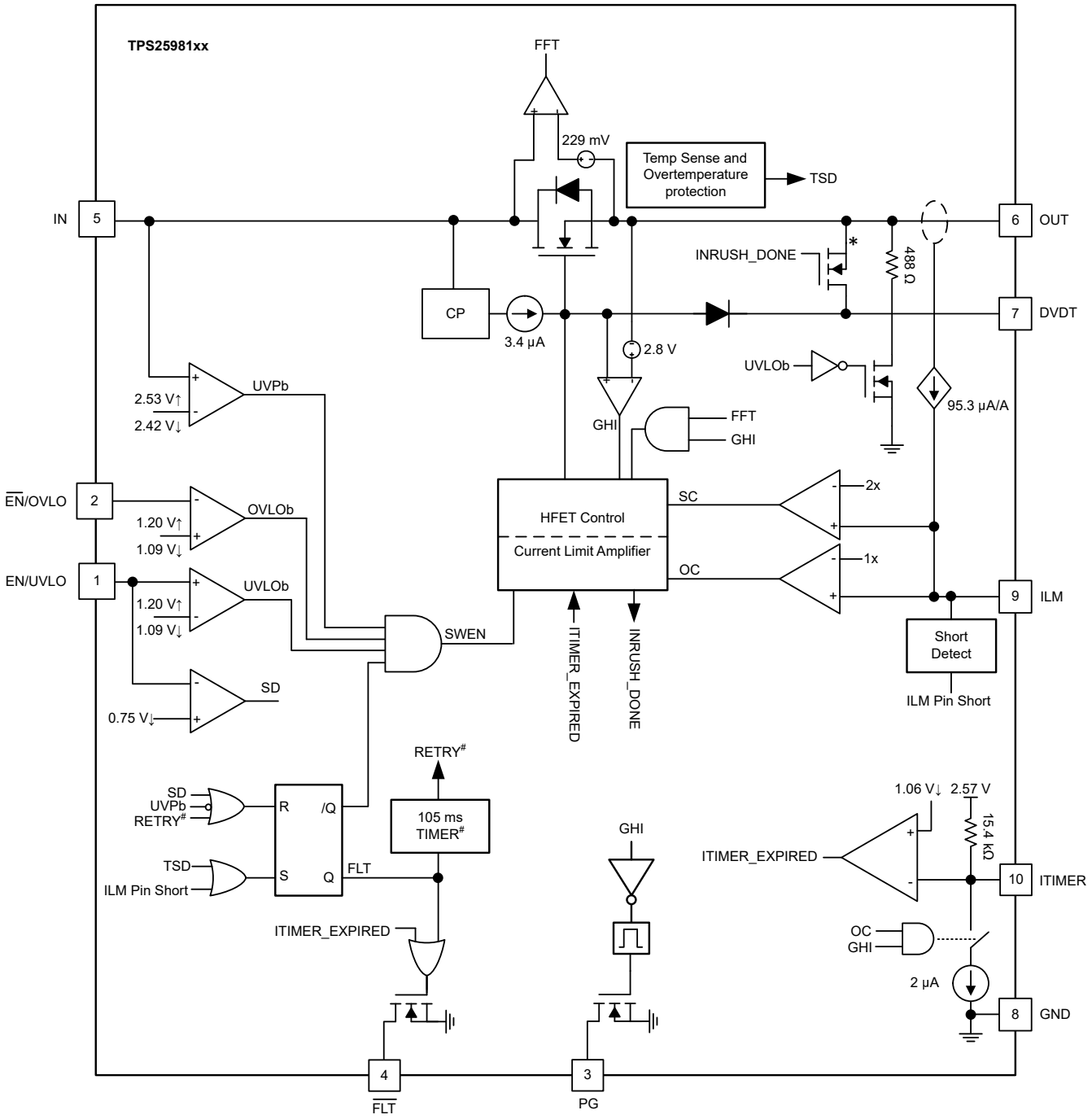

Not applicable to TPS25981xL (Latch-off) variants
* Not applicable for TPS259813x variants

8.3 Feature Description

The TPS25981xx eFuse is a compact, feature rich power management device that provides detection, protection and indication in the event of system faults.

8.3.1 Undervoltage Lockout (UVLO and UVP)

The TPS25981xx implements undervoltage protection on IN in case the applied voltage becomes too low for the system or device to properly operate. The undervoltage protection has a default lockout threshold of V_{UVP} which is fixed internally. Also, the UVLO comparator on the EN/UVLO pin allows the undervoltage protection threshold to be externally adjusted to a user defined value. Figure 8-1 and Equation 1 show how a resistor divider can be used to set the UVLO set point for a given voltage supply.

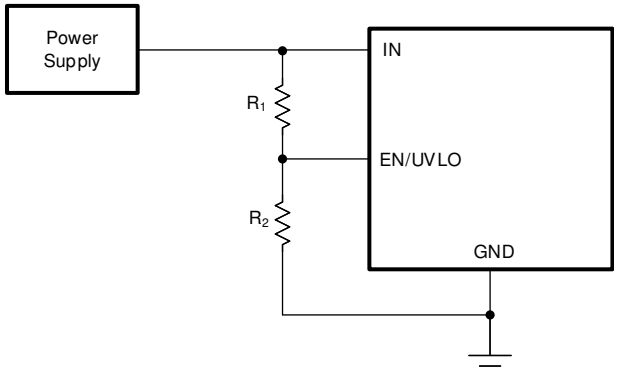

Figure 8-1. Adjustable Undervoltage Protection

$$V_{IN(UV)} = \frac{V_{UVLO} \times (R_1 + R_2)}{R_2} \quad (1)$$

8.3.2 Overvoltage Lockout (OVLO)

The TPS259814x devices allow the user to implement overvoltage lockout to protect the load from input overvoltage conditions. The OVLO comparator on the $\overline{EN}$/OVLO pin allows the overvoltage protection threshold to be adjusted to a user defined value. After the voltage at the $\overline{EN}$/OVLO pin crosses the OVLO rising threshold $V_{OV(R)}$, the device turns off the power to the output. Thereafter, the devices wait for the voltage at the $\overline{EN}$/OVLO pin to fall below the OVLO falling threshold $V_{OV(F)}$ before the output power is turned ON again. The rising and falling thresholds are slightly different to provide hysteresis. Figure 8-2 and Equation 2 show how a resistor divider can be used to set the OVLO set point for a given voltage supply.

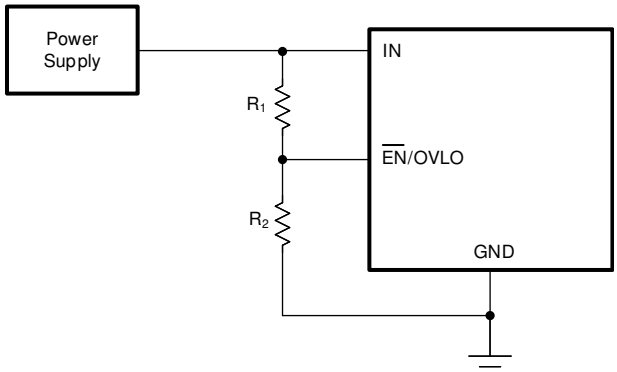

Figure 8-2. Adjustable Overvoltage Protection

$$V_{IN(OV)} = \frac{V_{OV} \times (R_1 + R_2)}{R_2} \quad (2)$$

Copyright © 2023 Texas Instruments Incorporated

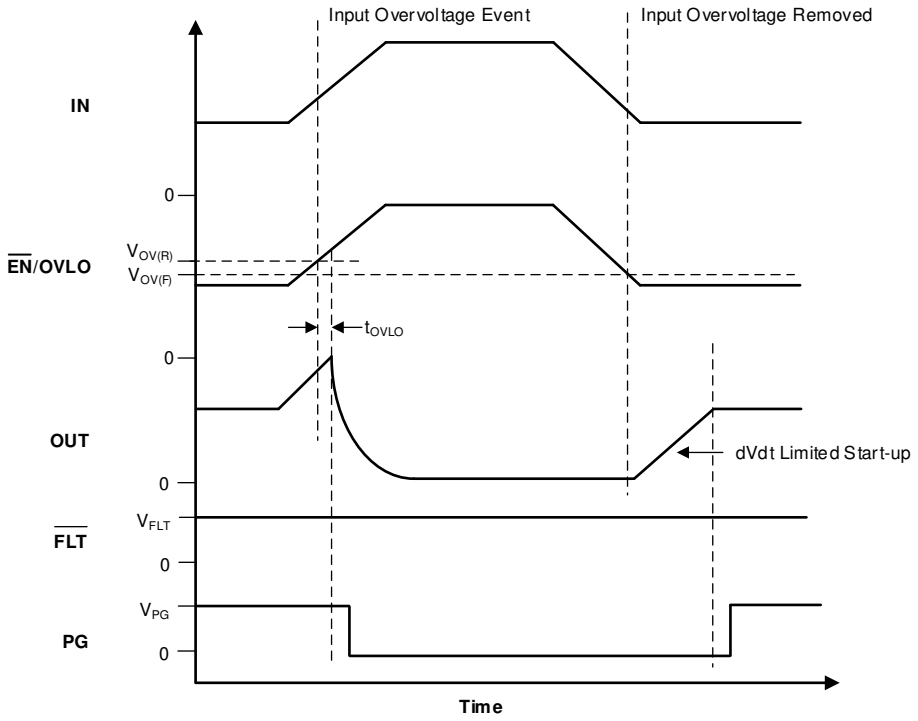

Figure 8-3. TPS259814x Overvoltage Lockout and Recovery

While recovering from a OVLO event, the TPS259814x variants start up with inrush control (dVdt).

8.3.3 Inrush Current, Overcurrent, and Short-Circuit Protection

TPS25981xx incorporates four levels of protection against overcurrent:

1. Adjustable slew rate (dVdt) for inrush current control
2. Adjustable threshold (I_{LIM}) for overcurrent protection during start-up or steady-state
3. Adjustable threshold (I_{SC}) for fast-trip response to severe overcurrent during start-up or steady-state
4. Fixed threshold (I_{FT}) for fast-trip response to quickly protect against hard output short circuits during steady-state

8.3.3.1 Slew Rate (dVdt) and Inrush Current Control

During hot-plug events or while trying to charge a large output capacitance at start-up, there can be a large inrush current. If the inrush current is not managed properly, it can damage the input connectors and cause the system power supply to droop leading to unexpected restarts elsewhere in the system. The inrush current during turn-on is directly proportional to the load capacitance and rising slew rate. Equation 3 can be used to find the slew rate (SR) required to limit the inrush current (I_{INRUSH}) for a given load capacitance (C_{OUT}):

$$SR\left(\frac{V}{ms}\right) = \frac{I_{INRUSH}\,(mA)}{C_{OUT}\,(\mu F)} \tag{3}$$

A capacitor can be connected to the dVdt pin to control the rising slew rate and lower the inrush current during turn on. Use Equation 4 to calculate the required C_{dVdt} capacitance to produce a given slew rate.

$$C_{dVdt}\,(pF) = \frac{3300}{SR\left(\frac{V}{ms}\right)} \tag{4}$$

The fastest output slew rate is achieved by leaving the dVdt pin open.

Copyright © 2023 Texas Instruments Incorporated

Note

For C_{dVdt} > 10 nF, TI recommends to add a 100-Ω resistor in series with the capacitor on the dVdt pin.

8.3.3.2 Circuit-Breaker During Steady-State

The TPS259814x (circuit-breaker) variants respond to output overcurrent conditions by turning off the output after a user adjustable transient fault blanking interval. When the load current exceeds the set overcurrent threshold (I_{LIM}) set by the ILM pin resistor (R_{ILM}), but stays lower than the fast-trip threshold (2 × I_{LIM}), the device starts discharging the ITIMER pin capacitor using an internal 2-µA pulldown current. If the load current drops below I_{LIM} before the ITIMER pin capacitor (C_{ITIMER}) discharges by ΔV_{ITIMER}, the ITIMER is reset by pulling it up to V_{INT} internally and the circuit-breaker action is not engaged. This action allows short load transient pulses to pass through the device without tripping the circuit. If the overcurrent condition persists, the C_{ITIMER} continues to discharge and after it discharges by ΔV_{ITIMER}, the circuit-breaker action turns off the FET immediately. At the same time, the C_{ITIMER} is charged up to V_{INT} again so that it is at its default state before the next overcurrent event. This action ensures the full blanking timer interval is provided for every overcurrent event. Equation 5 can be used to calculate the R_{ILM} value for a overcurrent threshold.

$$R_{ILM}\,(\Omega) = \frac{6585}{I_{LIM}\,(A)} \tag{5}$$

Note

1. Leaving the ILM pin open sets the current limit to nearly zero and results in the part breaking the circuit with the slightest amount of loading at the output.
2. Shorting the ILM pin to ground at any point during normal operation is detected as a fault and the part shuts down. There is a minimum current (I_{FLT}) which the part allows in this condition before the pin short condition is detected.

The duration for which transients are allowed can be adjusted using an appropriate capacitor value from ITIMER pin to ground. Use Equation 6 to calculate the C_{ITIMER} value needed to set the desired transient overcurrent blanking interval.

$$C_{ITIMER}\,(nF) = \frac{t_{ITIMER}\,(ms) \times I_{ITIMER}\,(\mu A)}{\Delta V_{ITIMER}\,(V)} \tag{6}$$

Copyright © 2023 Texas Instruments Incorporated

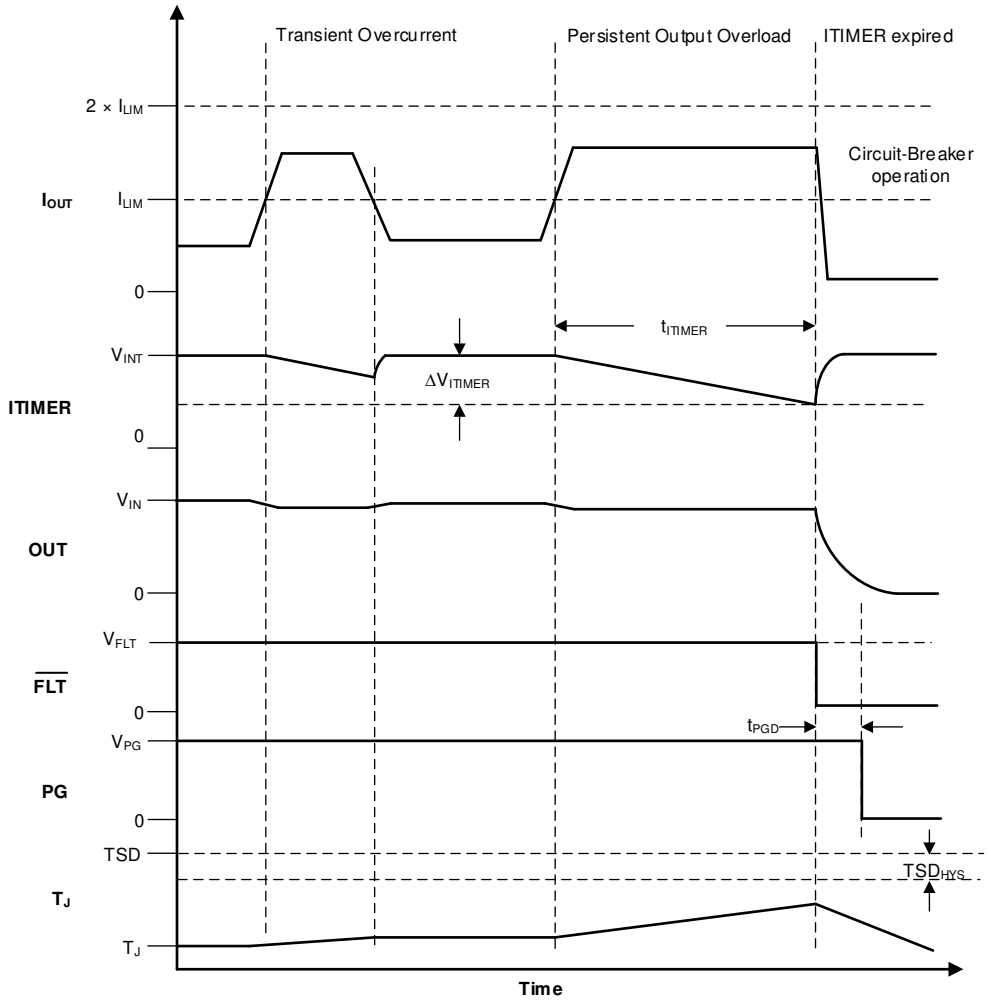

Figure 8-4. TPS259814x Overcurrent Response

Note

1. Leave the ITIMER pin open to allow the part to break the circuit with the minimum possible delay.
2. Shorting the ITIMER pin to ground results in minimum overcurrent response delay (similar to ITIMER pin open condition), but increases the device current consumption. This action is not a recommended mode of operation.
3. Increasing the ITIMER cap value extends the overcurrent blanking interval, but it also extends the time needed for the C_{ITIMER} to recharge up to V_{INT}. If the next overcurrent event occurs before the C_{ITIMER} is recharged fully, it takes lesser time to discharge to the ITIMER expiry threshold, thereby providing a shorter blanking interval than intended.
4. In low voltage applications, TI recommends adding a 30 kΩ resistor between the ITIMER pin and C_{ITIMER} for improved immunity to supply noise or fluctuations.

After the part shuts down due to a circuit-breaker fault, it either stays latched off (TPS259814L variant) or restarts automatically after a fixed delay (TPS259814A variant).

8.3.3.3 Active Current Limiting During Start-Up

The TPS259814x devices respond to output overcurrent conditions during start-up by actively limiting the current. If the load current exceeds the set overcurrent threshold (I_{LIM}) set by the ILM pin resistor (R_{ILM}), but stays lower than the short-circuit threshold (2 × I_{LIM}), the current limit loop starts regulating the FET to actively

Copyright © 2023 Texas Instruments Incorporated

limit the current to the set overcurrent threshold (I_{LIM}). Equation 7 can be used to calculate the R_{ILM} value for a desired overcurrent threshold.

$$R_{ILM}\,(\Omega) = \frac{6585}{I_{LIM}\,(A)} \tag{7}$$

Note

1. Leaving the ILM pin open sets the current limit to nearly zero and results in the part entering current limit with the slightest amount of loading at the output.
2. The current limit circuit employs a foldback mechanism. The current limit threshold in the foldback region (0 V < V_{OUT} < V_{FB}) is lower than the target steady-state overcurrent threshold (I_{LIM}).

During active current limit, the output voltage drops, resulting in increased device power dissipation across the FET. If the device internal temperature (T_J) exceeds the thermal shutdown threshold (TSD), the FET is turned off. After the part shuts down due to TSD fault, it either stays latched off (TPS25981xL variants) or restarts automatically after a fixed delay (TPS25981xA variants). For more details on device response to overtemperature, see *Overtemperature Protection (OTP)*.

8.3.3.4 Short-Circuit Protection

During an output short-circuit event, the current through the device increases very rapidly. When a severe overcurrent condition is detected, the device triggers a fast-trip response to limit the current to a safe level. The internal fast-trip comparator employs a scalable threshold (I_{SC}) which is equal to 2 × I_{LIM}. This action enables the user to adjust the fast-trip threshold rather than using a fixed threshold which can be too high for some low current systems. The device also employs a fixed fast-trip threshold (I_{FT}) to protect fast protection against hard short circuits during steady-state. The fixed fast-trip threshold is higher than the maximum recommended user adjustable scalable fast-trip threshold. After the current exceeds I_{SC} or I_{FT}, the FET is turned off completely within t_{FT}. Thereafter, the devices tries to turn the FET back on after a short de-glitch interval (30 µs) in a current limited manner instead of a dVdt limited manner. This action ensures that the FET has a faster recovery after a transient overcurrent event and minimizes the output voltage droop. However, if the fault is persistent, the device stays in current limit causing the junction temperature to rise and eventually enter thermal shutdown. For details on the device response to overtemperature, see *Overtemperature Protection (OTP)*.

Copyright © 2023 Texas Instruments Incorporated

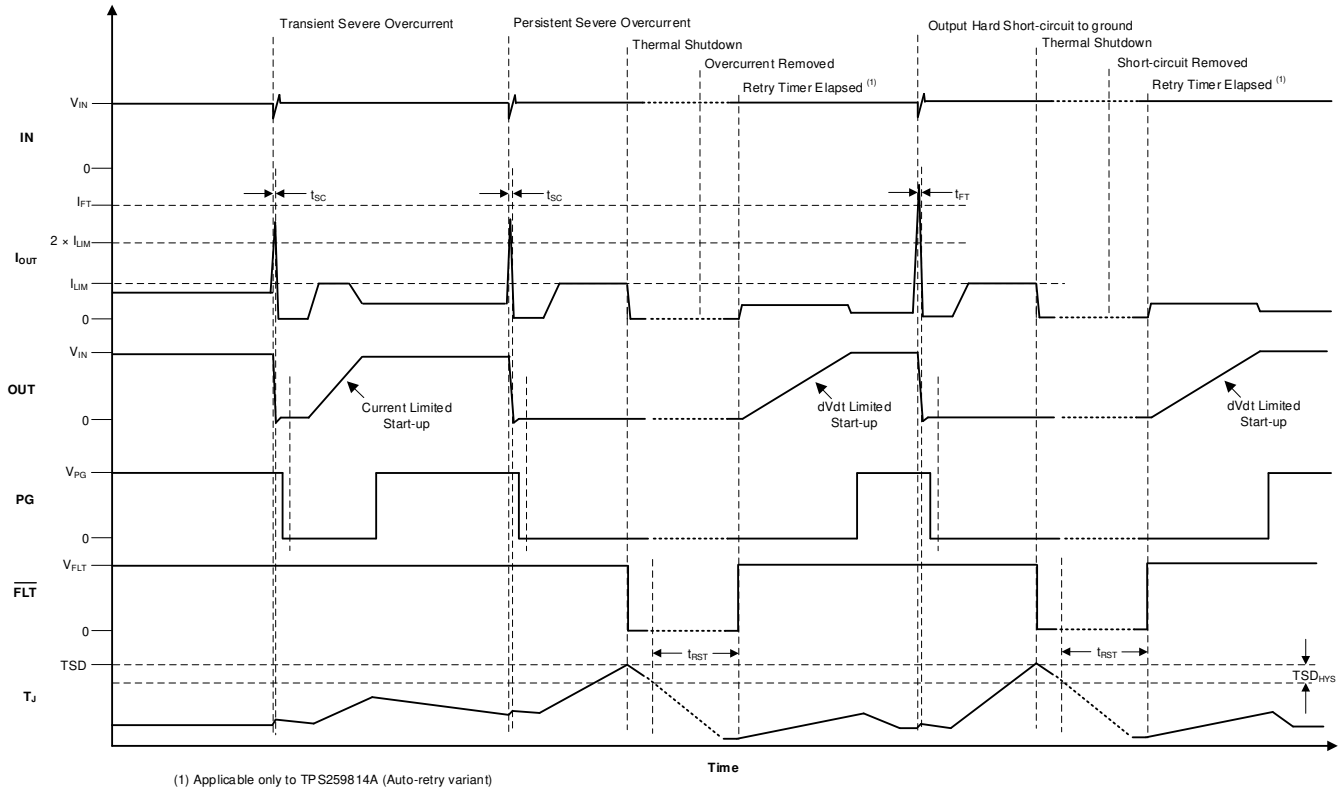

Figure 8-5. TPS25981xx Short-Circuit Response

8.3.4 Analog Load Current Monitor

The device allows the system to accurately monitor the output load current by providing an analog current sense output on the ILM pin which is proportional to the current through the FET. The user can sense the voltage (V_{ILM}) across the R_{ILM} to get a measure of the output load current.

$$I_{LOAD}\,(A) = \frac{V_{ILM}\,(\mu V)}{G_{IMON}\,(\mu A/A) \times R_{ILM}\,(\Omega)} \tag{8}$$

The waveform below shows the ILM signal response to a load step at the output.

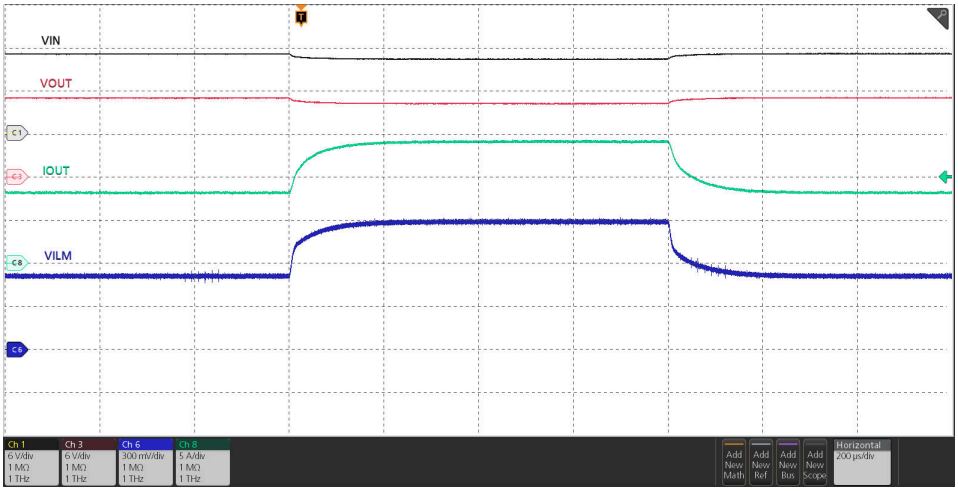

V_{IN} = 12 V, R_{ILM} = 649 Ω, I_{OUT} varied dynamically between 8 A and 14 A

Figure 8-6. Analog Load Current Monitor Response

Note

The ILM pin is sensitive to capacitive loading. Careful design and layout is needed to ensure the parasitic capacitive loading on the ILM pin is < 50 pF for stable operation.

8.3.5 Overtemperature Protection (OTP)

The device monitors the internal die temperature (T_J) at all times and shuts down the part as soon as the temperature exceeds a safe operating level (TSD) thereby protecting the device from damage. The device does turn back on until the junction cools down sufficiently, that is the die temperature falls below (TSD – TSD_{HYS}).

When the TPS25981xL (latch-off variant) detects thermal overload, it is shut down and remains latched-off until the device is power cycled or re-enabled. When the TPS25981xA (auto-retry variant) detects thermal overload, it remains off until it has cooled down by TSD_{HYS}. Thereafter, the device remains off for an additional delay of t_{RST} after which it automatically retries to turn on if it is still enabled.

Table 8-1. Thermal Shutdown

Device	Enter TSD	Exit TSD
TPS25981xL (latch-off)	T_J ≥ TSD	T_J < TSD – TSD_{HYS} V_{IN} cycled to 0 V and then above $V_{UVP(R)}$ *or* EN/UVLO toggled below $V_{SD(F)}$
TPS25981xA (auto-retry)	T_J ≥ TSD	T_J < TSD – TSD_{HYS} V_{IN} cycled to 0 V and then above $V_{UVP(R)}$ *or* EN/UVLO toggled below $V_{SD(F)}$ *or* t_{RST} timer expired

Copyright © 2023 Texas Instruments Incorporated

8.3.6 Fault Response and Indication ($\overline{FLT}$)

The following table summarizes the device response to various fault conditions. Additionally, an active low external fault indication ($\overline{FLT}$) pin is available.

Table 8-2. Fault Summary

Event	Protection Response	Fault Latched Internally	$\overline{FLT}$ Pin Status	$\overline{FLT}$ Assertion Delay
Overtemperature	Shutdown	Y	L	
Undervoltage (UVP or UVLO)	Shutdown	N	H	
Input overvoltage	Shutdown	N	H	
Transient overcurrent (I_{LIM} < I_{OUT} < 2 × I_{LIM})	None	N	N	
Persistent overcurrent	Circuit-breaker	Y	N/A	
Output short circuit to GND	Circuit-breaker followed by current limit	N	H	
ILM pin open (during steady-state)	Shutdown	N	L	t_{ITIMER}
ILM pin shorted to GND	Shutdown	Y	L	t_{ITIMER}

Faults which are latched internally can be cleared either by power cycling the part (pulling V_{IN} to 0 V) or by pulling the EN/UVLO pin voltage below V_{SD}. This action also releases the $\overline{FLT}$ pin and resets the t_{RST} timer for the TPS25981xA (auto-retry) variants.

During a latched fault, pulling the EN/UVLO just below the UVLO threshold has no impact on the device. This fact is true for both TPS25981xL (latch-off) and TPS25981xA (auto-retry) variants.

For TPS25981xA (auto-retry) variants, on expiry of the t_{RST}timer after a fault, the device restarts automatically and the $\overline{FLT}$ pin is de-asserted.

8.3.7 Power Good Indication (PG)

The TPS259814x provides an active high digital output (PG) which serves as a power good indication signal and is asserted high when the device is in steady-state and ready to deliver power. The PG is an open-drain pin and must be pulled up to an external supply.

After power up, PG is pulled low initially. The device initiates a inrush sequence in which the FET is turned on in a controlled manner. When the FET gate voltage reaches the full overdrive indicating that the inrush sequence is complete, the PG is asserted after a de-glitch time (t_{PGA}).

PG is de-asserted if at any time the FET is turned off. The PG de-assertion de-glitch time is t_{PGD}.

Copyright © 2023 Texas Instruments Incorporated

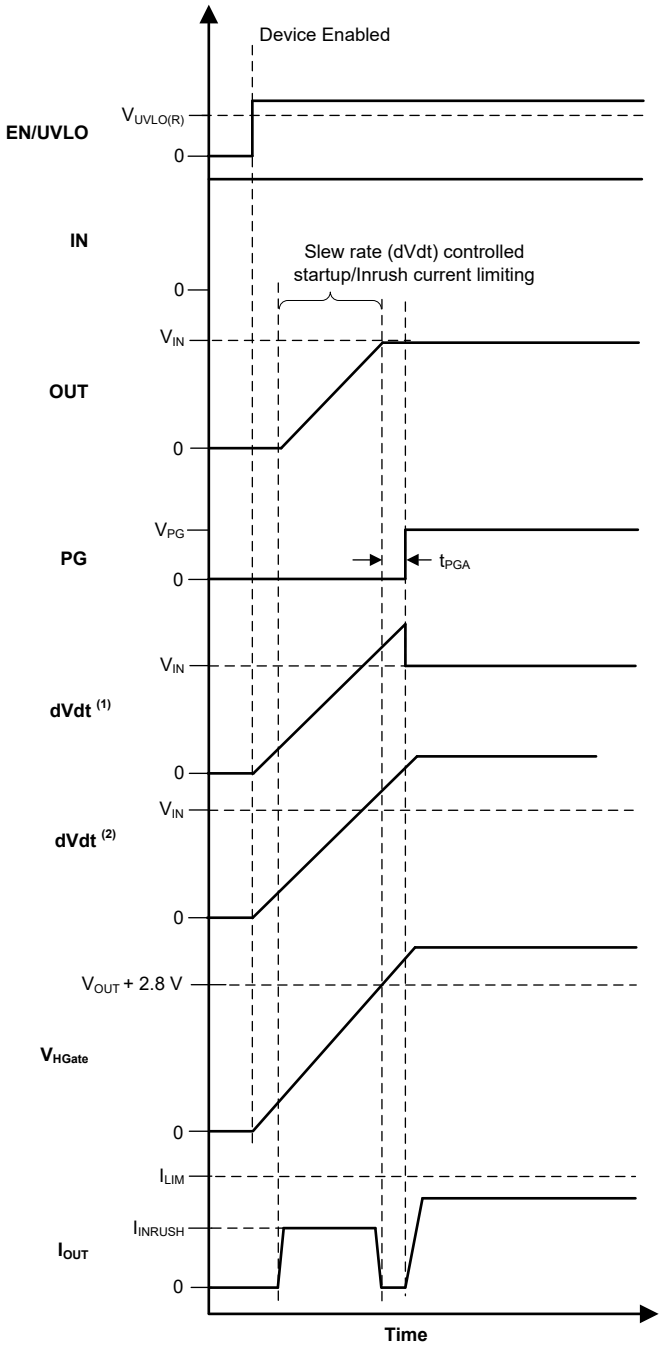

(1) Applicable only for TPS259814x variants
(2) Applicable only for TPS259813x variants

Figure 8-7. TPS25981xx PG Timing Diagram

Copyright © 2023 Texas Instruments Incorporated

Table 8-3. TPS25981xx PG Indication Summary

Event	Protection Response	PG Pin	PG Delay
Undervoltage (UVP or UVLO)	Shutdown	L	
Overvoltage (OVLO)	Shutdown	L	t_{PGD}
Steady-state	NA	H	t_{PGA}
Transient overcurrent	NA	H	
Persistent overload	Circuit-breaker	L	t_{ITIMER} + t_{PGD}
Output short-circuit to GND	Fast-trip followed by current limit	L	t_{PGD}
ILM pin open	Shutdown	L	t_{ITIMER} + t_{PGD}
ILM pin shorted to GND	Shutdown	L	t_{PGD}
Overtemperature	Shutdown	L	t_{PGD}

When there is no supply to the device, the PG pin is expected to stay low. However, there is no active pulldown in this condition to drive this pin all the way down to 0 V. If the PG pin is pulled up to an independent supply which is present even if the device is unpowered, there can be a small voltage seen on this pin depending on the pin sink current, which is a function of the pullup supply voltage and resistor. Minimize the sink current to keep this pin voltage low enough not to be detected as a logic HIGH by associated external circuits in this condition.

8.3.8 Quick Output Discharge (QOD)

The TPS25981xx has an integrated output discharge function which can be helpful in quickly removing residual charge left on the large output capacitors and avoids bus floating at some undefined voltage. The internal QOD pulldown FET on the OUT pin is activated when the EN/UVLO is held low ($V_{EN} < V_{UVLO(F)}$). The output discharge function can result in excess power dissipation inside the device leading to increase in junction temperature. The output discharge is disabled if the junction temperature (T_J) crosses the thermal shutdown threshold (TSD) to avoid long term degradation of the part.

8.3.9 Reverse Current Blocking FET Driver

The TPS259813x variants provide an option to drive an external N-FET for implementing reverse current blocking function. The N-FET is connected in series with the eFuse in a common source configuration as shown in Figure 8-8. The gate of the blocking FET is controlled by the DVDT pin of the eFuse. When the eFuse is turned ON and operating in steady-state, the DVDT pin is driven high which turns the external FET fully ON to provide a low impedance power path from input to output. When the eFuse turns OFF under any condition, the DVDT pin is pulled low and the blocking FET is turned OFF. This ensures there's no current path from the output to input in the OFF state.

Copyright © 2023 Texas Instruments Incorporated

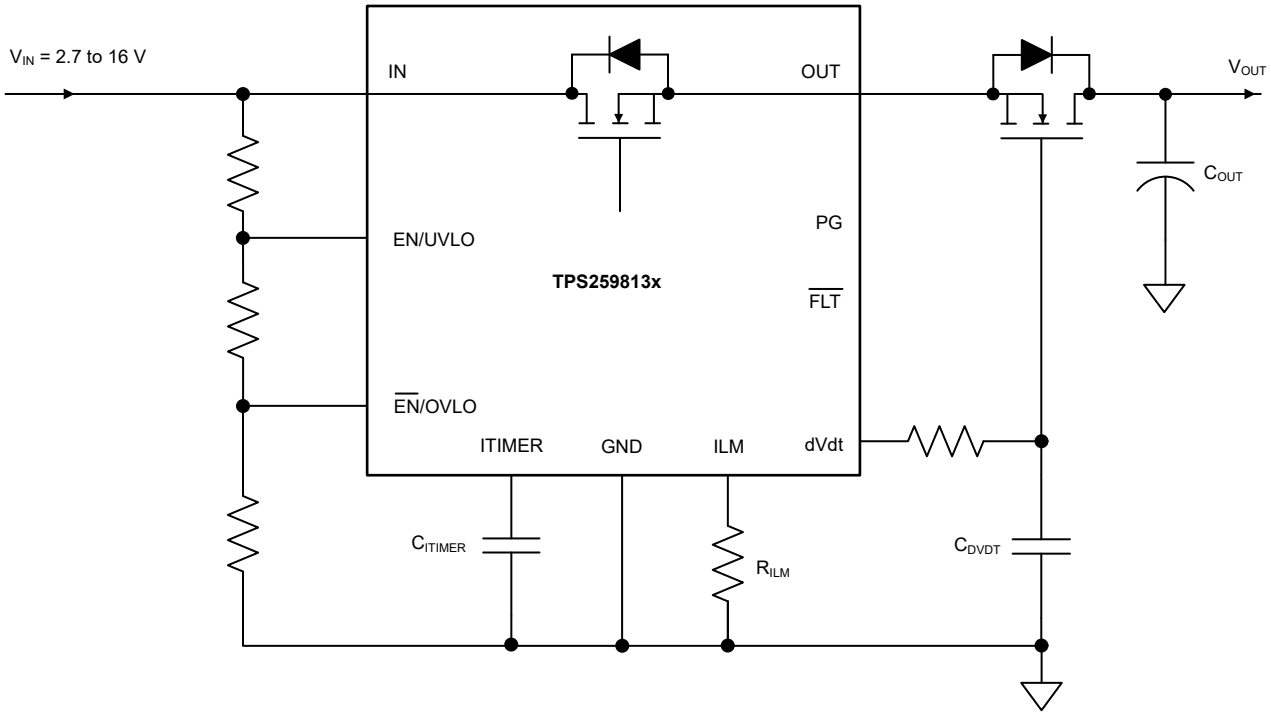

Figure 8-8. Reverse Current Blocking Using External FET

8.4 Device Functional Modes

The device has one mode of operation that applies when operated within the *Recommended Operating Conditions*.

Copyright © 2023 Texas Instruments Incorporated

9 Application and Implementation

Note

Information in the following applications sections is not part of the TI component specification, and TI does not warrant its accuracy or completeness. TI's customers are responsible for determining suitability of components for their purposes, as well as validating and testing their design implementation to confirm system functionality.

9.1 Application Information

The TPS25981xx is a 2.7-V to 16-V, 10-A eFuse that is typically used for power rail protection applications. The device operates from 2.7 V to 16 V with adjustable overvoltage and undervoltage protection. The device provides ability to control inrush current. The device can be used in a variety of systems such as server motherboard/add-on cards/NIC, optical modules, enterprise switches/routers, Industrial PC, UHDTV. The design procedure explained in the subsequent sections can be used to select the supporting component values based on the application requirement. Additionally, a spreadsheet design tool, *TPS25981xx Design Calculator*, is available in the web product folder.

9.1.1 Single Device, Self-Controlled

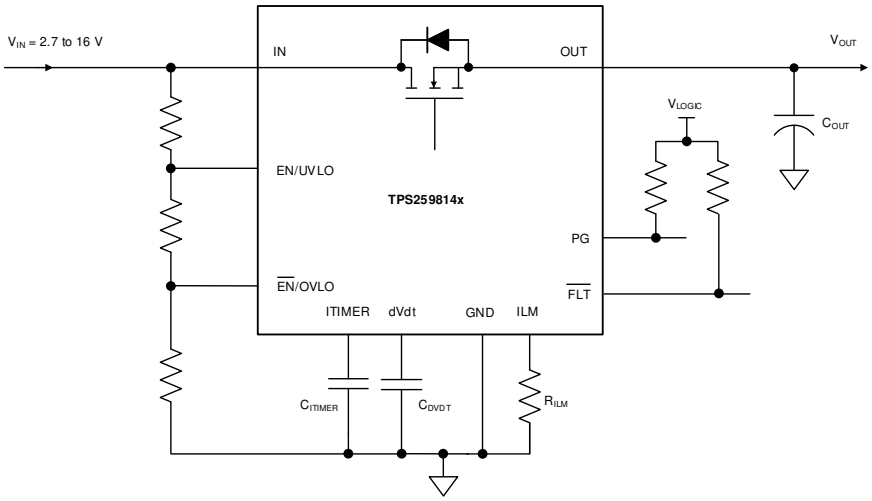

Figure 9-1. Single Device, Self-Controlled

Other variations:

In a Host MCU controlled system, EN/UVLO or OVLO can also be driven from the host GPIO to control the device.

ILM pin can be connected to the MCU ADC input for current monitoring purpose.

Note

TI recommends to keep parasitic capacitance on the ILM pin below 50 pF to ensure stable operation.

9.1.2 Parallel Operation

Applications which need higher steady current can use two TPS25981xx devices connected in parallel as shown in Figure 9-2 below. In this configuration, the first device turns on initially to provide the inrush current limiting. The second device is held in an OFF state by driving its EN/UVLO pin low using the PG signal of the first device. After the inrush sequence is complete, the first device asserts its PG pin high and turns on the second device.

Copyright © 2023 Texas Instruments Incorporated

The second device asserts its PG signal to indicate when it has turned on fully, thereby indicating to the system that the parallel combination is ready to deliver the full steady-state current.

Once in steady-state, both devices share current nearly equally. There can be a slight skew in the currents depending on the part-to-part variation in the R_{ON} as well as the PCB trace resistance mismatch.

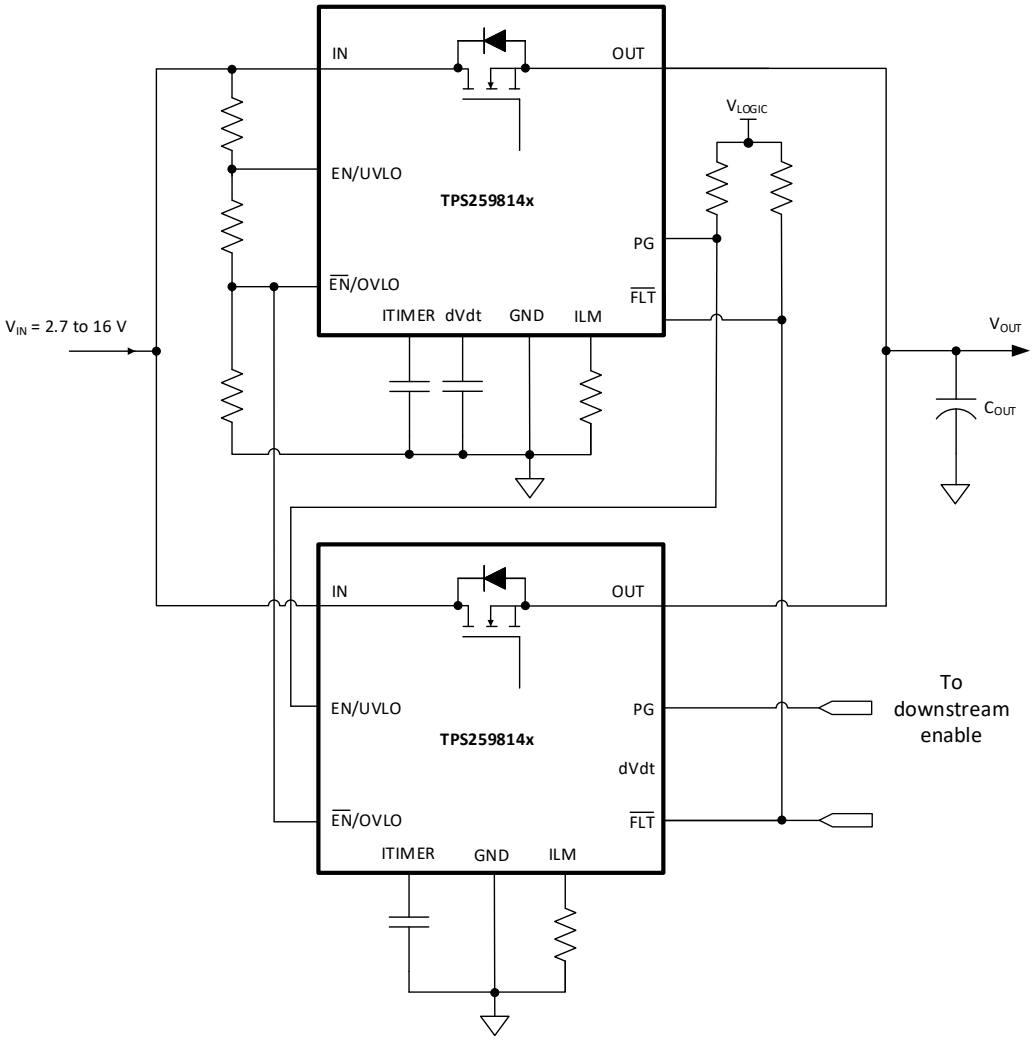

Figure 9-2. Two TPS259814x Devices Connected in Parallel for Higher Steady-State Current Capability

The waveforms below illustrate the behavior of the parallel configuration during start-up as well as during steady-state.

Copyright © 2023 Texas Instruments Incorporated

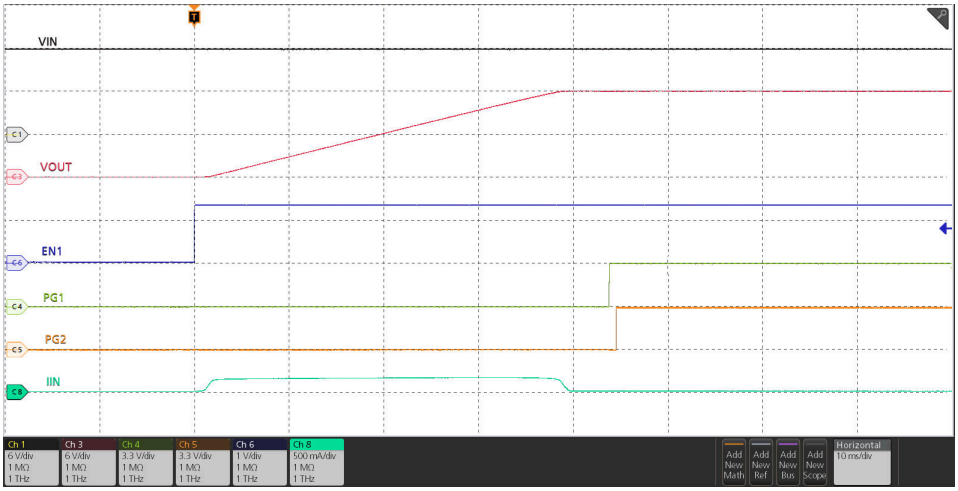

Figure 9-3. Parallel Devices Sequencing During Start-Up

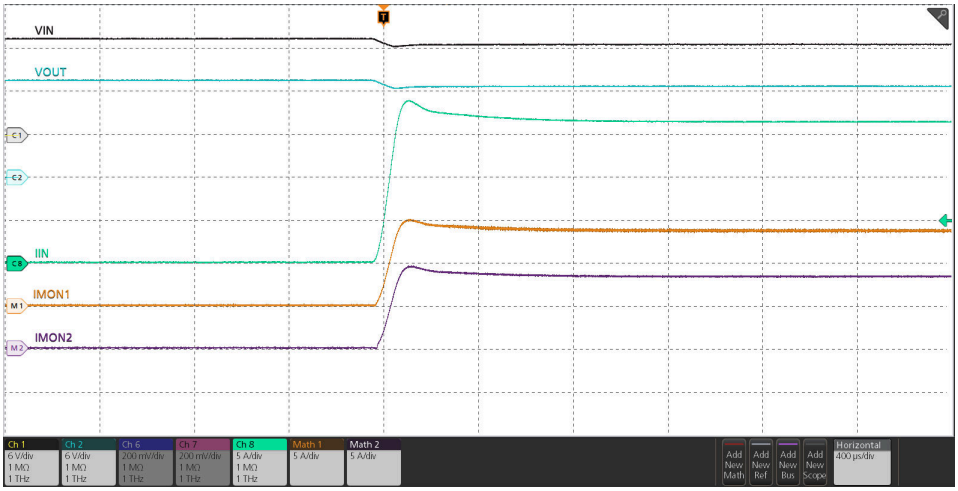

Figure 9-4. Parallel Devices Load Current During Steady-State

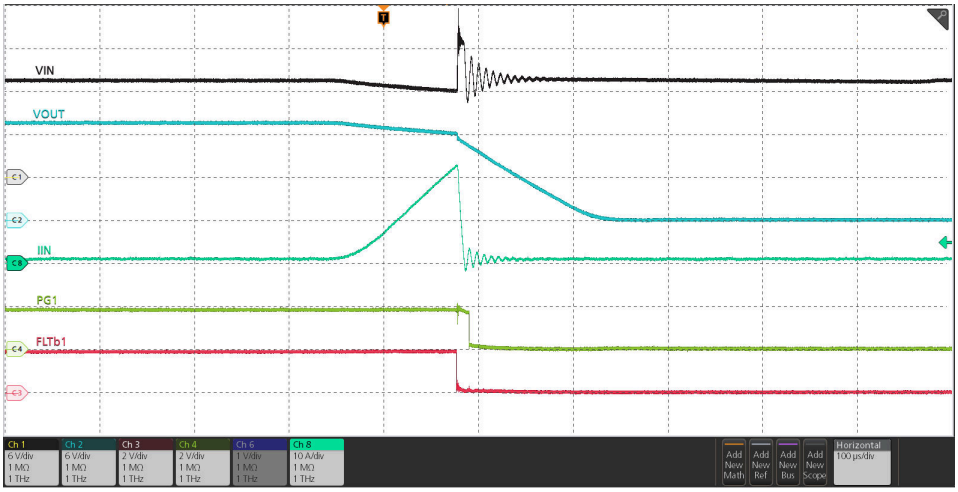

Figure 9-5. Parallel Devices Overcurrent Response

Another way to increase current handling capability of the eFuse in steady-state is by connecting a TPS25981xx eFuse in parallel with a TPS22811x load switch as shown in Figure 9-6.

Copyright © 2023 Texas Instruments Incorporated

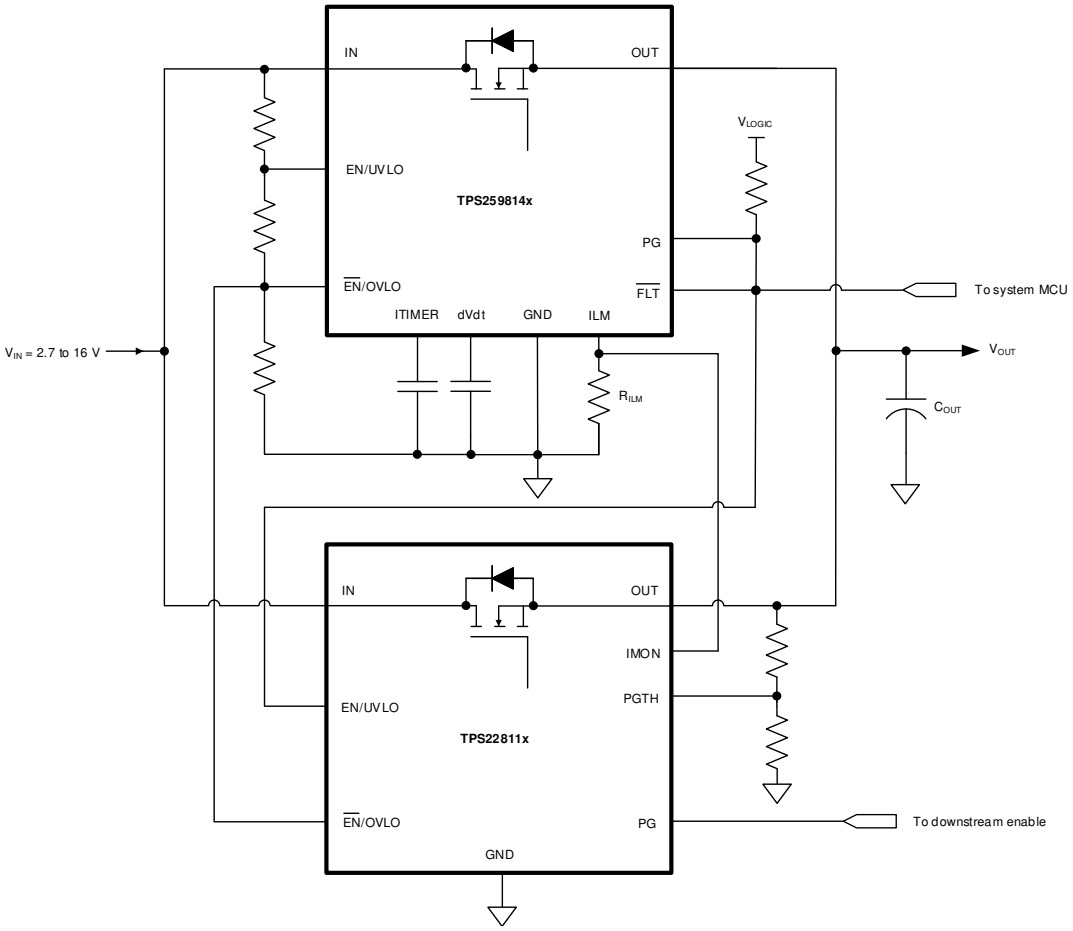

Figure 9-6. TPS259814x and TPS22811x Connected in Parallel for Higher Steady-State Current Capability

9.2 Typical Application

TPS259814x can be used for optical module power rail protection. Optical modules are commonly used in high-bandwidth data communication systems such as optical networking equipment, enterprise/data-center switches and routers. Several variants of optical modules are available in the market, which differ in the form-factor and the data speed support (Gbit/s). Of these, the popular variant double dense quad small form-factor pluggable (QSFP-DD) module supports speeds up to 400 Gbit/s. In addition to the system protection during hot-plug events, the other key requirement for optical module is the tight voltage regulation. The optical module uses 3.3-V supply and requires voltage regulation within ±5% for proper operation.

A typical power tree of such system is shown in Figure 9-7. The optical line card consists of DC-DC converter, protection device (eFuse) and power supply filters. The DC-DC converter steps-down the 12 V to 3.3 V and maintains the 3.3-V rail within ±2 %. The power supply filtering network uses ‘LC’ components to reduce high frequency noise injection into the optical module. The DC resistance of the inductor ‘L’ causes voltage drop of around 1.5% which leaves us with a voltage drop budget of just 1.5% (3.3 V × 1.5% = 50 mV) across the protection device. Considering a maximum load current of 5.5 A per module, the maximum ON-resistance of the protection device must be less than 9 mΩ. TPS259814x eFuse offers a very low ON-resistance of 6 mΩ (typical), thereby meeting the target specification with additional margin to spare and simplifying the overall system design.

Copyright © 2023 Texas Instruments Incorporated

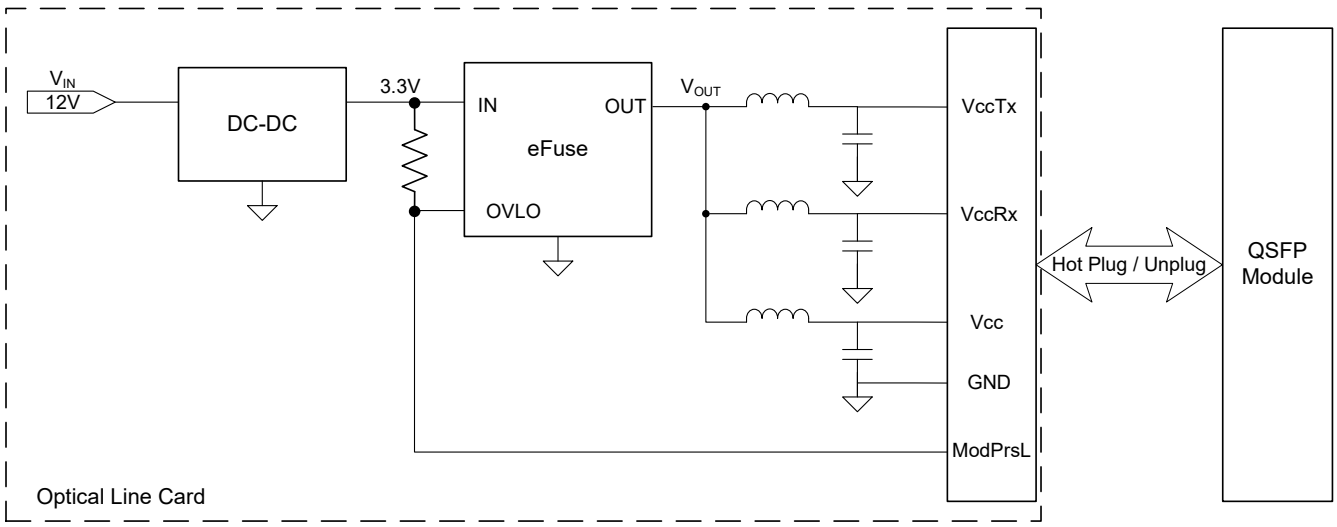

Figure 9-7. Power Tree Block Diagram of a Typical Optical Line Card

As shown in *Figure 9-7*, ModPrsL signal acts as a handshake signal between the line card and the optical module. ModPrsL is always pulled to ground inside the module. When the module is hot-plugged into the host "Optical Line Card" connector, the ModPrsL signal pulls down the OVLO pin and enables the TPS259814x eFuse to power the module. This action ensures that power is applied on the port only when a module is plugged in and disconnected when there is no module present.

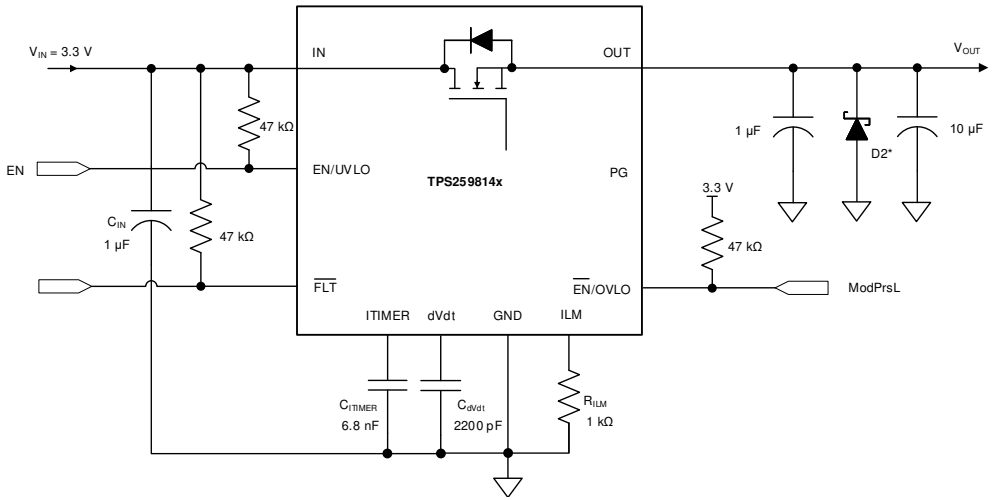

* Optional circuit components needed for transient protection depending on input and output inductance. Please refer to *Transient Protection* section for details.

Figure 9-8. Optical Module Port Protection

9.2.1 Design Requirements

Table 9-1. Design Parameters

PARAMETER	VALUE
Input supply voltage (V_{IN})	3.3 V
Maximum voltage drop in the path	± 5%
Maximum continuous current	5.5 A
Load transient blanking interval (t_{ITIMER})	5 ms
Output capacitance (C_{OUT})	10 µF

Copyright © 2023 Texas Instruments Incorporated

Table 9-1. Design Parameters (continued)

PARAMETER	VALUE
Output rise time (t_R)	2.2 ms
Overcurrent threshold (I_{LIM})	6.5 A
Fault response	Auto-retry

9.2.2 Detailed Design Procedure

9.2.2.1 Device Selection

Because the application requires retry response after a fault, the TPS259814A variant is selected after referring to the *Device Comparison Table*.

9.2.2.2 Setting Output Voltage Rise Time (t_R)

For a successful design, the junction temperature of device must be kept below the absolute maximum rating during both dynamic (start-up) and steady-state conditions. Dynamic power stresses often are an order of magnitude greater than the static stresses, so it is important to determine the right start-up time and inrush current limit required with system capacitance to avoid thermal shutdown during start-up.

The slew rate (SR) needed to achieve the desired output rise time can be calculated as:

$$SR\left(\frac{V}{ms}\right) = \frac{V_{IN}\,(V)}{t_R\,(ms)} = \frac{3.3\,V}{2.2\,ms} = 1.5\,\frac{V}{ms} \tag{9}$$

The C_{dVdt} needed to achieve this slew rate can be calculated as:

$$C_{dVdt}\,(pF) = \frac{3300}{SR\left(\frac{V}{ms}\right)} = \frac{3300}{1.5\,\frac{V}{ms}} = 2200\,pF \tag{10}$$

Choose the nearest standard capacitor value as 2200 pF.

For this slew rate, the inrush current can be calculated as:

$$I_{INRUSH}\,(mA) = C_{OUT}\,(\mu F) \times SR\left(\frac{V}{ms}\right) = 10\,\mu F \times 1.5\,\frac{V}{ms} = 15\,mA \tag{11}$$

The average power dissipation inside the part during inrush can be calculated as:

$$PD_{INRUSH}\,(mW) = 0.5 \times V_{IN}\,(V) \times I_{INRUSH}\,(mA) = 0.5 \times 3.3\,V \times 15\,mA = 25\,mW \tag{12}$$

For the given power dissipation, the thermal shutdown time of the device must be greater than the ramp-up time t_R to avoid start-up failure. Figure 9-9 shows the thermal shutdown limit, for 0.025 W of power, the shutdown time is more than 10 s which is very large as compared to t_R = 2.2 ms. Therefore, it is safe to use 2.2 ms as the start-up time for this application.

Copyright © 2023 Texas Instruments Incorporated

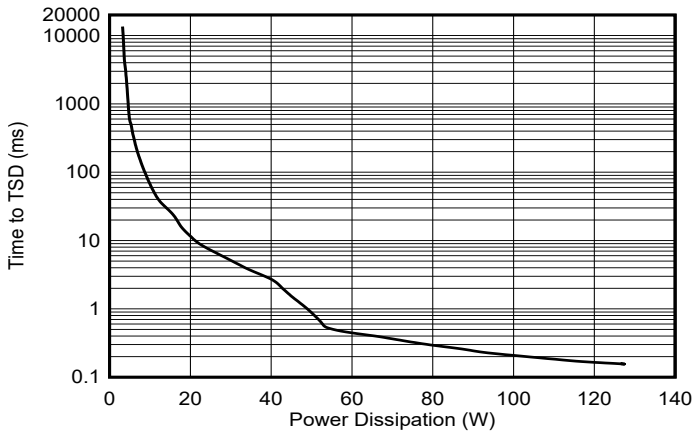

Figure 9-9. Thermal Shutdown Plot During Inrush

9.2.2.3 Setting Overcurrent Threshold (I_{LIM})

The overcurrent protection (circuit-breaker) threshold can be set using the R_{ILM} resistor whose value can be calculated as:

$$R_{ILM}\,(\Omega) = \frac{6585}{I_{LIM}\,(A)} = \frac{6585}{6.5\,A} = 1013\ \Omega \tag{13}$$

Choose the nearest 1% standard resistor value as 1 kΩ.

9.2.2.4 Setting Overcurrent Blanking Interval (t_{ITIMER})

The overcurrent blanking timer interval can be set using the C_{ITIMER} capacitor whose value can be calculated as:

$$C_{ITIMER}\,(nF) = \frac{t_{ITIMER}\,(ms) \times I_{ITIMER}\,(\mu A)}{\Delta V_{ITIMER}\,(V)} = \frac{5\,ms \times 2\,\mu A}{1.51\,V} = 6.62\,nF \tag{14}$$

Choose the nearest standard capacitor value as 6.8 nF.

9.2.2.5 Voltage Drop

Table 9-2 shows the power path voltage drop (%) due to the eFuse in QSFP modules of different power classes.

Table 9-2. Voltage Drop Across TPS25981 on QSFP Module Power Rail

POWER CLASS	MAXIMUM POWER CONSUMPTION PER MODULE (W)	MAXIMUM LOAD CURRENT (A)	TYPICAL VOLTAGE DROP (%)
1	1.5	0.454	0.082
2	3.5	1.06	0.192
3	7	2.12	0.385
4	8	2.42	0.440
5	10	3.03	0.551
6	12	3.63	0.660
7	14	4.24	0.771
8	18	5.45	0.991

Copyright © 2023 Texas Instruments Incorporated

9.2.3 Application Curves

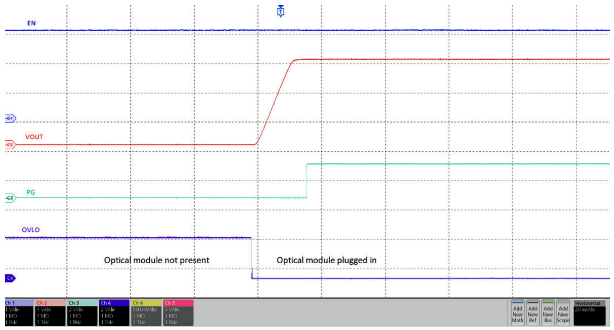

Figure 9-10. Output Voltage Profile When Optical Module is Inserted

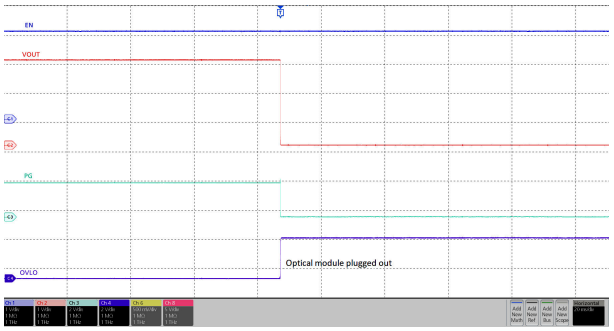

Figure 9-11. Output Voltage Profile When Optical Module is Plugged Out

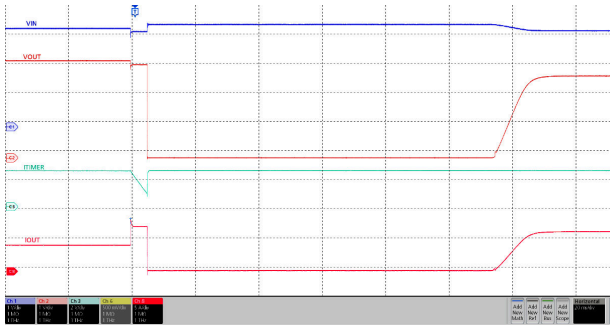

Figure 9-12. Circuit-Breaker with Transient Overcurrent Blanking Interval of 5 ms; Device Restarts in Current Limit Mode

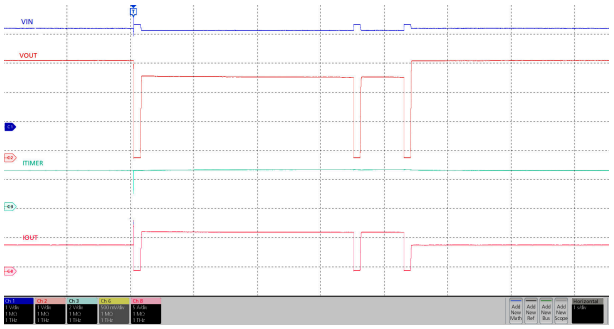

Figure 9-13. Overload Response and Recovery

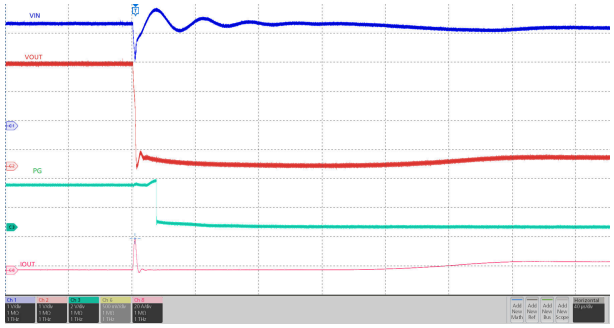

Figure 9-14. Output Hard Short Circuit While ON

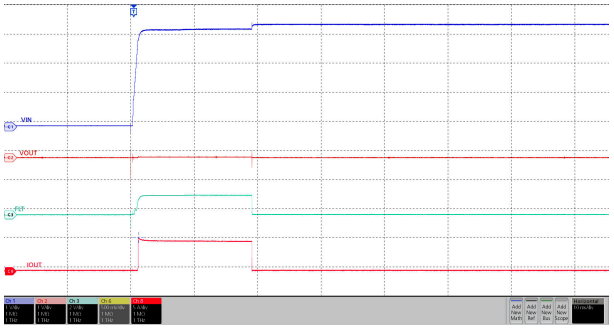

Figure 9-15. Power Up with Short Circuit on Output

Copyright © 2023 Texas Instruments Incorporated

10 Power Supply Recommendations

The TPS25981xx devices are designed for a supply voltage range of 2.7 V ≤ V_{IN} ≤ 16 V. TI recommends an input ceramic bypass capacitor higher than 0.1 µF if the input supply is located more than a few inches from the device. The power supply must be rated higher than the set current limit to avoid voltage droops during overcurrent and short-circuit conditions.

10.1 Transient Protection

In the case of a short-circuit and overload current limit when the device interrupts current flow, the input inductance generates a positive voltage spike on the input, and the output inductance generates a negative voltage spike on the output. The peak amplitude of voltage spikes (transients) is dependent on the value of inductance in series to the input or output of the device. Such transients can exceed the absolute maximum ratings of the device if steps are not taken to address the issue. Typical methods for addressing transients include:

- Minimize lead length and inductance into and out of the device.
- Use a large PCB GND plane.
- Connect a Schottky diode from the OUT pin ground to absorb negative spikes.
- Connect a low ESR capacitor larger than 1 µF at the OUT pin very close to the device.
- Use a low-value ceramic capacitor C_{IN} = 1 µF to absorb the energy and dampen the transients. The capacitor voltage rating must be at least twice the input supply voltage to be able to withstand the positive voltage excursion during inductive ringing.

  Use Equation 15 to estimate the approximate value of input capacitance:

$$V_{SPIKE(Absolute)} = V_{IN} + I_{LOAD} \times \sqrt{\frac{L_{IN}}{C_{IN}}} \quad (15)$$

  where

  – V_{IN} is the nominal supply voltage.
  – I_{LOAD} is the load current.
  – L_{IN} equals the effective inductance seen looking into the source.
  – C_{IN} is the capacitance present at the input.
- Some applications can require the addition of a Transient Voltage Suppressor (TVS) to prevent transients from exceeding the absolute maximum ratings of the device. In some cases, even if the maximum amplitude of the transients is below the absolute maximum rating of the device, a TVS can help to absorb the excessive energy dump and prevent it from creating very fast transient voltages on the input supply pin of the IC, which can couple to the internal control circuits and cause unexpected behavior.

Figure 10-1 shows the circuit implementation with optional protection components.

Copyright © 2023 Texas Instruments Incorporated

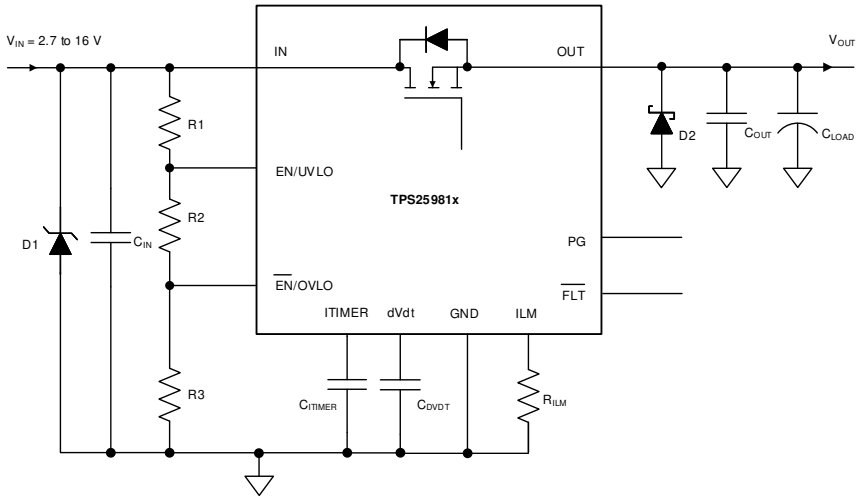

Figure 10-1. Circuit Implementation with Optional Protection Components

10.2 Output Short-Circuit Measurements

It is difficult to obtain repeatable and similar short-circuit testing results. The following contribute to variation in results:

- Source bypassing
- Input leads
- Circuit layout
- Component selection
- Output shorting method
- Relative location of the short
- Instrumentation

The actual short exhibits a certain degree of randomness because it microscopically bounces and arcs. Ensure that configuration and methods are used to obtain realistic results. Do not expect to see waveforms exactly like those in this data sheet because every setup is different.

Copyright © 2023 Texas Instruments Incorporated

11 Layout

11.1 Layout Guidelines

- For all applications, TI recommends a ceramic decoupling capacitor of 0.1 µF or greater between the IN terminal and GND terminal.
- The optimal placement of the decoupling capacitor is closest to the IN and GND terminals of the device. Care must be taken to minimize the loop area formed by the bypass-capacitor connection, the IN terminal, and the GND terminal of the IC.
- High current-carrying power-path connections must be as short as possible and must be sized to carry at least twice the full-load current.
- The GND terminal must be tied to the PCB ground plane at the terminal of the IC with the shortest possible trace. The PCB ground must be a copper plane or island on the board. TI recommends to have a separate ground plane island for the eFuse. This plane does not carry any high currents and serves as a quiet ground reference for all the critical analog signals of the eFuse. The device ground plane must be connected to the system power ground plane using a star connection.
- The IN and OUT pins are used for heat dissipation. Connect to as much copper area on top and bottom PCB layers using as possible with thermal vias. The vias under the device also help to minimize the voltage gradient across the IN and OUT pads and distribute current uniformly through the device, which is essential to achieve the best on-resistance and current sense accuracy.
- Locate the following support components close to their connection pins:
  - R_{ILM}
  - C_{dVdT}
  - C_{ITIMER}
  - Resistors for the EN/UVLO, $\overline{EN}$/OVLO pins
- Connect the other end of the component to the GND pin of the device with shortest trace length. The trace routing for the R_{ILM}, C_{ITIMER} and C_{dVdt} components to the device must be as short as possible to reduce parasitic effects on the current limit , overcurrent blanking interval and soft start timing. TI recommends to keep parasitic capacitance on ILM pin below 50 pF to ensure stable operation. These traces must not have any coupling to switching signals on the board.
- Because the bias current on ILM pin directly controls the overcurrent protection behavior of the device, the PCB routing of this node must be kept away from any noisy (switching) signals.
- Protection devices such as TVS, snubbers, capacitors, or diodes must be placed physically close to the device they are intended to protect. These protection devices must be routed with short traces to reduce inductance. For example, TI recommends a protection Schottky diode to address negative transients due to switching of inductive loads. TI also recommends to add a ceramic decoupling capacitor of 1 µF or greater between OUT and GND. These components must be physically close to the OUT pins. Care must be taken to minimize the loop area formed by the Schottky diode, bypass-capacitor connection, the OUT pin, and the GND terminal of the IC.

Copyright © 2023 Texas Instruments Incorporated

11.2 Layout Example

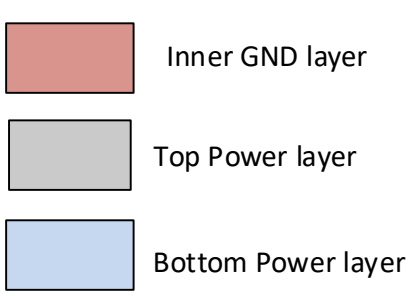

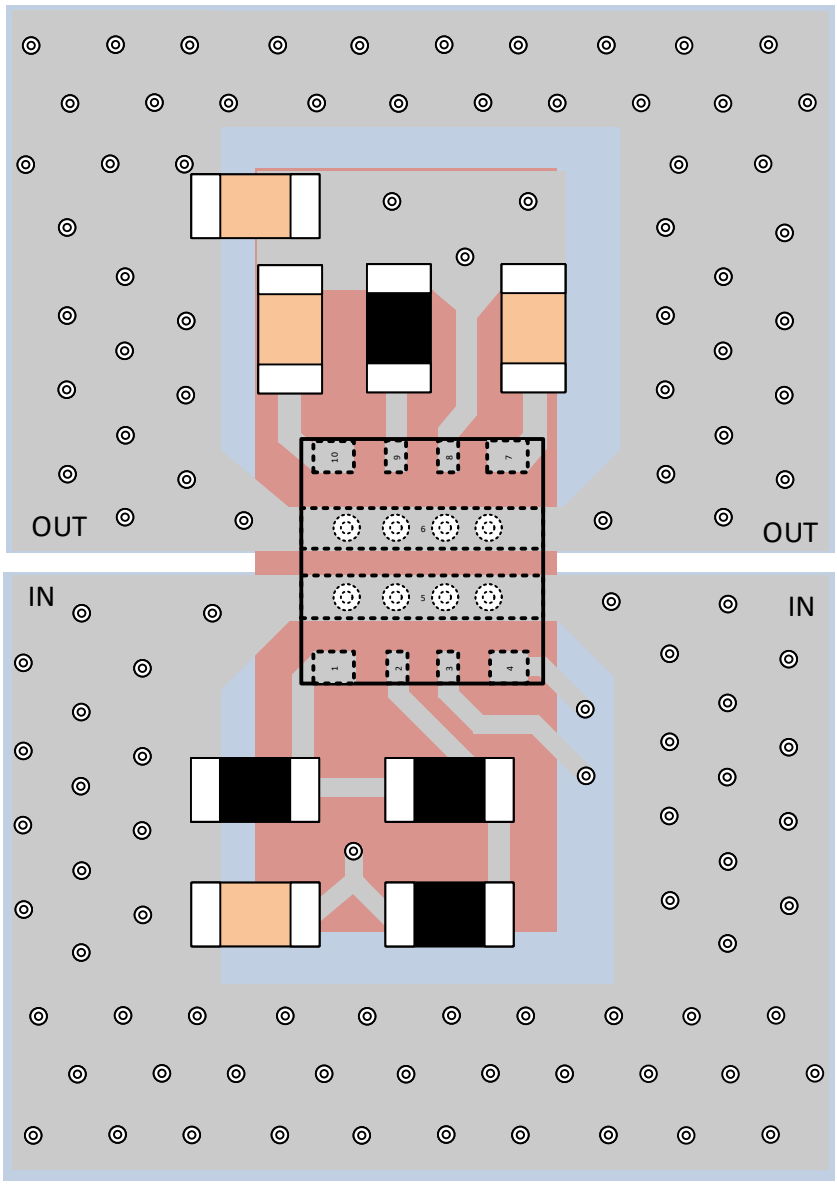

Figure 11-1. Layout Example

Copyright © 2023 Texas Instruments Incorporated

12 Device and Documentation Support

TI offers an extensive line of development tools. Tools and software to evaluate the performance of the device, generate code, and develop solutions are listed below.

12.1 Documentation Support

12.1.1 Related Documentation

For related documentation see the following:

- Texas Instruments, *TPS25981EVM eFuse Evaluation Board*
- Texas Instruments, *TPS25981xx Design Calculator*

12.2 Receiving Notification of Documentation Updates

To receive notification of documentation updates, navigate to the device product folder on ti.com. Click on *Subscribe to updates* to register and receive a weekly digest of any product information that has changed. For change details, review the revision history included in any revised document.

12.3 Support Resources

TI E2E™ support forums are an engineer's go-to source for fast, verified answers and design help — straight from the experts. Search existing answers or ask your own question to get the quick design help you need.

Linked content is provided "AS IS" by the respective contributors. They do not constitute TI specifications and do not necessarily reflect TI's views; see TI's Terms of Use.

12.4 Trademarks

HotRod™ and TI E2E™ are trademarks of Texas Instruments.
All trademarks are the property of their respective owners.

12.5 Electrostatic Discharge Caution



This integrated circuit can be damaged by ESD. Texas Instruments recommends that all integrated circuits be handled with appropriate precautions. Failure to observe proper handling and installation procedures can cause damage.

ESD damage can range from subtle performance degradation to complete device failure. Precision integrated circuits may be more susceptible to damage because very small parametric changes could cause the device not to meet its published specifications.

12.6 Glossary

TI Glossary	This glossary lists and explains terms, acronyms, and definitions.

Copyright © 2023 Texas Instruments Incorporated

13 Mechanical, Packaging, and Orderable Information

The following pages include mechanical, packaging, and orderable information. This information is the most current data available for the designated devices. This data is subject to change without notice and revision of this document. For browser-based versions of this data sheet, refer to the left-hand navigation.

Copyright © 2023 Texas Instruments Incorporated

PACKAGING INFORMATION

Orderable part number	Status (1)	Material type (2)	Package | Pins	Package qty | Carrier	RoHS (3)	Lead finish/ Ball material (4)	MSL rating/ Peak reflow (5)	Op temp (°C)	Part marking (6)
TPS259813ARPWR	Active	Production	VQFN-HR (RPW) | 10	3000 | LARGE T&R	Yes	SN	Level-2-260C-1 YEAR	-40 to 125	34NH
TPS259813ARPWR.A	Active	Production	VQFN-HR (RPW) | 10	3000 | LARGE T&R	Yes	SN	Level-2-260C-1 YEAR	-40 to 125	34NH
TPS259813LRPWR	Active	Production	VQFN-HR (RPW) | 10	3000 | LARGE T&R	Yes	SN	Level-2-260C-1 YEAR	-40 to 125	34OH
TPS259813LRPWR.A	Active	Production	VQFN-HR (RPW) | 10	3000 | LARGE T&R	Yes	SN	Level-2-260C-1 YEAR	-40 to 125	34OH
TPS259814ARPWR	Active	Production	VQFN-HR (RPW) | 10	3000 | LARGE T&R	Yes	SN	Level-2-260C-1 YEAR	-40 to 125	2KWH
TPS259814ARPWR.A	Active	Production	VQFN-HR (RPW) | 10	3000 | LARGE T&R	Yes	SN	Level-2-260C-1 YEAR	-40 to 125	2KWH
TPS259814LRPWR	Active	Production	VQFN-HR (RPW) | 10	3000 | LARGE T&R	Yes	SN	Level-2-260C-1 YEAR	-40 to 125	2KXH
TPS259814LRPWR.A	Active	Production	VQFN-HR (RPW) | 10	3000 | LARGE T&R	Yes	SN	Level-2-260C-1 YEAR	-40 to 125	2KXH
TPS259814LRPWRG4	Active	Production	VQFN-HR (RPW) | 10	3000 | LARGE T&R	Yes	NIPDAU	Level-2-260C-1 YEAR	-40 to 125	2KXH
TPS259814LRPWRG4.A	Active	Production	VQFN-HR (RPW) | 10	3000 | LARGE T&R	Yes	NIPDAU	Level-2-260C-1 YEAR	-40 to 125	2KXH

(1) **Status:** For more details on status, see our product life cycle.

(2) **Material type:** When designated, preproduction parts are prototypes/experimental devices, and are not yet approved or released for full production. Testing and final process, including without limitation quality assurance, reliability performance testing, and/or process qualification, may not yet be complete, and this item is subject to further changes or possible discontinuation. If available for ordering, purchases will be subject to an additional waiver at checkout, and are intended for early internal evaluation purposes only. These items are sold without warranties of any kind.

(3) **RoHS values:** Yes, No, RoHS Exempt. See the TI RoHS Statement for additional information and value definition.

(4) **Lead finish/Ball material:** Parts may have multiple material finish options. Finish options are separated by a vertical ruled line. Lead finish/Ball material values may wrap to two lines if the finish value exceeds the maximum column width.

(5) **MSL rating/Peak reflow:** The moisture sensitivity level ratings and peak solder (reflow) temperatures. In the event that a part has multiple moisture sensitivity ratings, only the lowest level per JEDEC standards is shown. Refer to the shipping label for the actual reflow temperature that will be used to mount the part to the printed circuit board.

(6) **Part marking:** There may be an additional marking, which relates to the logo, the lot trace code information, or the environmental category of the part.

Multiple part markings will be inside parentheses. Only one part marking contained in parentheses and separated by a "~" will appear on a part. If a line is indented then it is a continuation of the previous line and the two combined represent the entire part marking for that device.

Important Information and Disclaimer: The information provided on this page represents TI's knowledge and belief as of the date that it is provided. TI bases its knowledge and belief on information provided by third parties, and makes no representation or warranty as to the accuracy of such information. Efforts are underway to better integrate information from third parties. TI has taken and continues to take reasonable steps to provide representative

and accurate information but may not have conducted destructive testing or chemical analysis on incoming materials and chemicals. TI and TI suppliers consider certain information to be proprietary, and thus CAS numbers and other limited information may not be available for release.

In no event shall TI's liability arising out of such information exceed the total purchase price of the TI part(s) at issue in this document sold by TI to Customer on an annual basis.

TAPE AND REEL INFORMATION

REEL DIMENSIONS

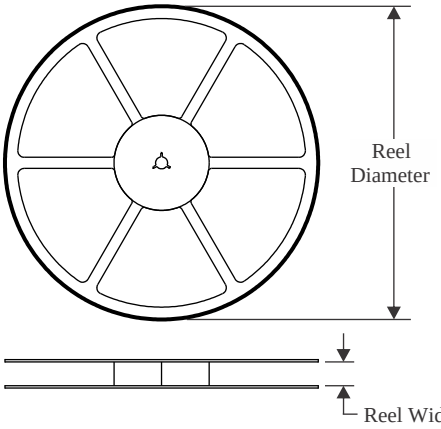

TAPE DIMENSIONS

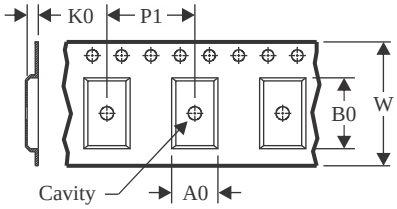

A0	Dimension designed to accommodate the component width
B0	Dimension designed to accommodate the component length
K0	Dimension designed to accommodate the component thickness
W	Overall width of the carrier tape
P1	Pitch between successive cavity centers

QUADRANT ASSIGNMENTS FOR PIN 1 ORIENTATION IN TAPE

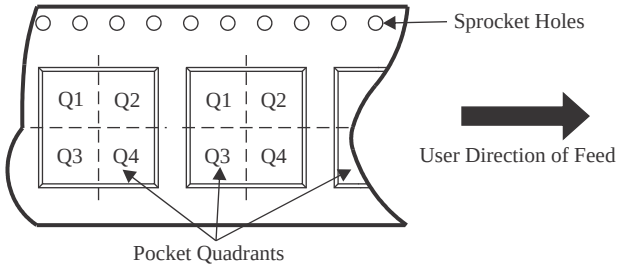

*All dimensions are nominal

Device	Package Type	Package Drawing	Pins	SPQ	Reel Diameter (mm)	Reel Width W1 (mm)	A0 (mm)	B0 (mm)	K0 (mm)	P1 (mm)	W (mm)	Pin1 Quadrant
TPS259813ARPWR	VQFN-HR	RPW	10	3000	180.0	8.4	2.3	2.3	1.15	4.0	8.0	Q2
TPS259813LRPWR	VQFN-HR	RPW	10	3000	180.0	8.4	2.3	2.3	1.15	4.0	8.0	Q2
TPS259814ARPWR	VQFN-HR	RPW	10	3000	180.0	8.4	2.3	2.3	1.15	4.0	8.0	Q2
TPS259814LRPWR	VQFN-HR	RPW	10	3000	180.0	8.4	2.3	2.3	1.15	4.0	8.0	Q2
TPS259814LRPWRG4	VQFN-HR	RPW	10	3000	180.0	8.4	2.3	2.3	1.15	4.0	8.0	Q2

TAPE AND REEL BOX DIMENSIONS

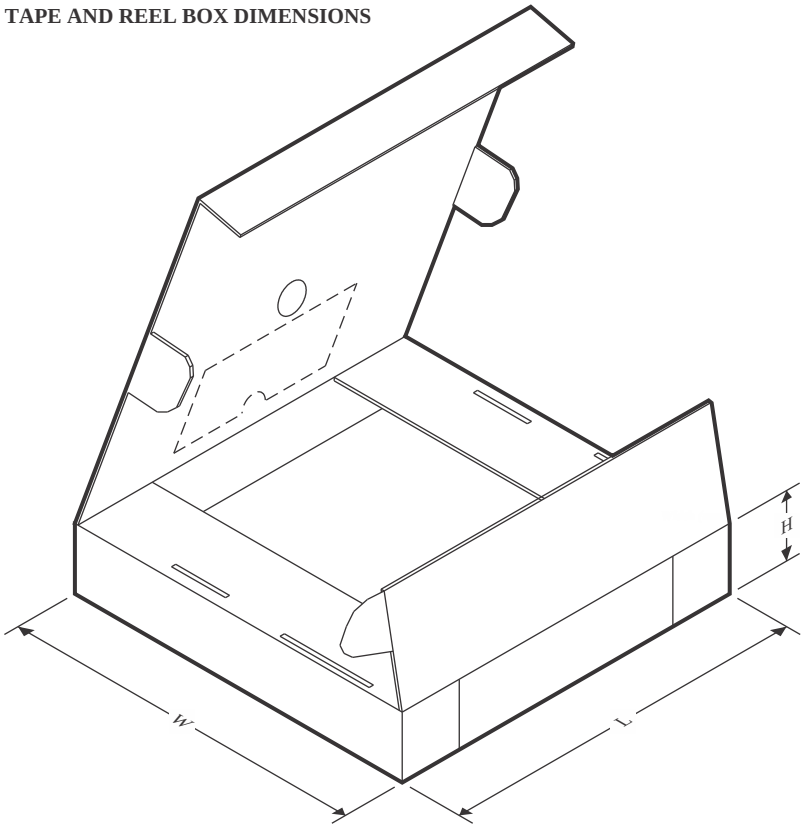

*All dimensions are nominal

Device	Package Type	Package Drawing	Pins	SPQ	Length (mm)	Width (mm)	Height (mm)
TPS259813ARPWR	VQFN-HR	RPW	10	3000	210.0	185.0	35.0
TPS259813LRPWR	VQFN-HR	RPW	10	3000	210.0	185.0	35.0
TPS259814ARPWR	VQFN-HR	RPW	10	3000	210.0	185.0	35.0
TPS259814LRPWR	VQFN-HR	RPW	10	3000	210.0	185.0	35.0
TPS259814LRPWRG4	VQFN-HR	RPW	10	3000	210.0	185.0	35.0

PACKAGE OUTLINE

RPW0010A

VQFN-HR - 1 mm max height

PLASTIC QUAD FLATPACK - NO LEAD

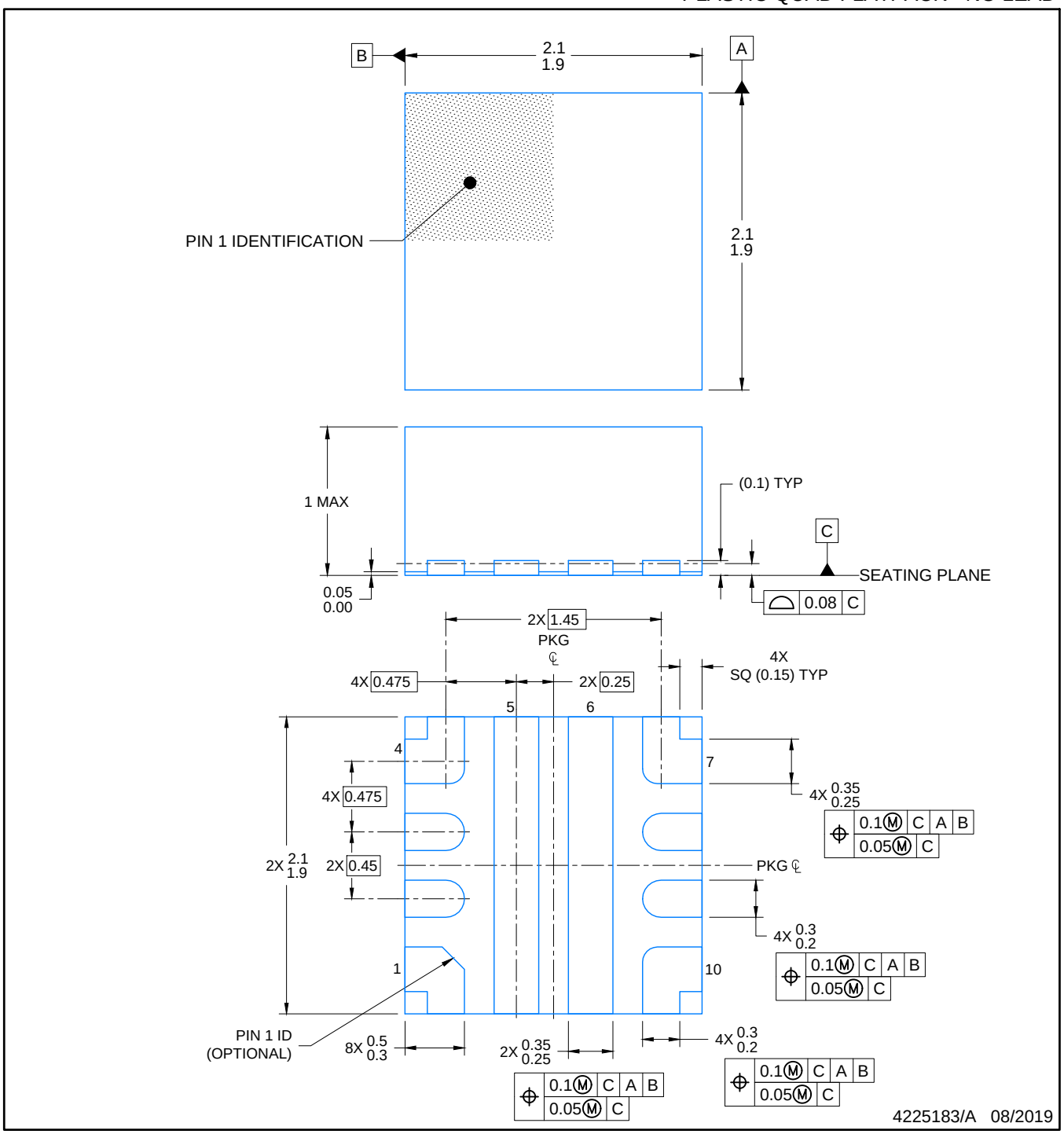

NOTES:

1. All linear dimensions are in millimeters. Any dimensions in parenthesis are for reference only. Dimensioning and tolerancing per ASME Y14.5M.
2. This drawing is subject to change without notice.

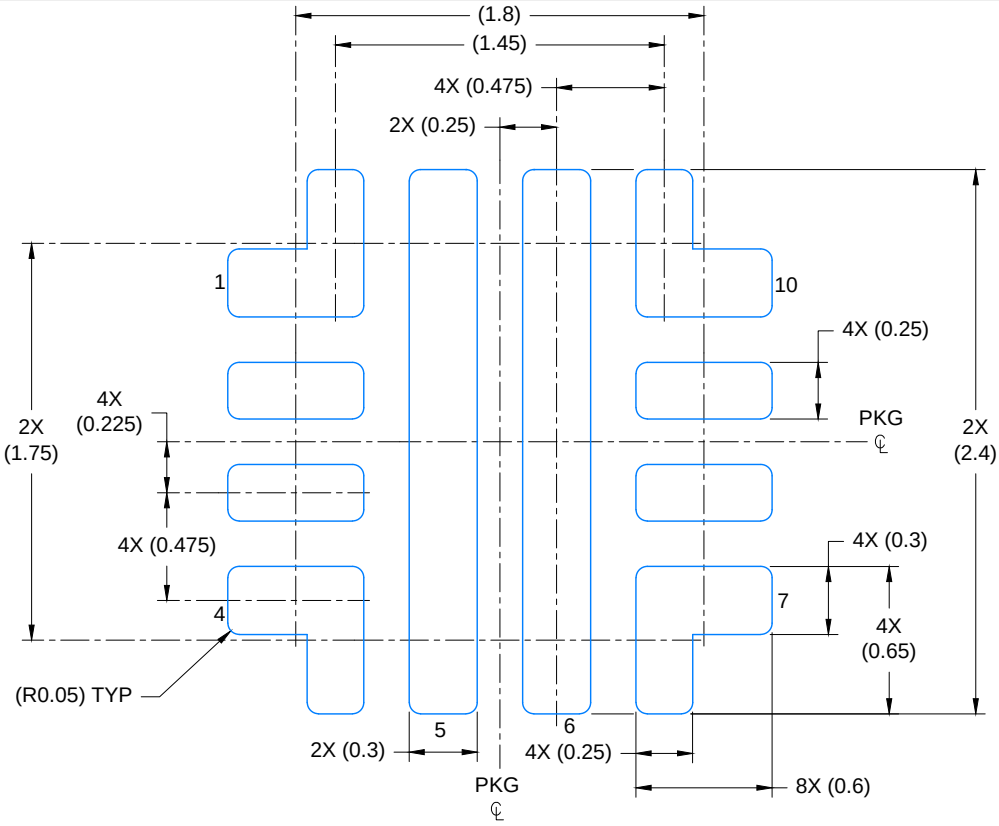

LAND PATTERN EXAMPLE

SCALE: 30X

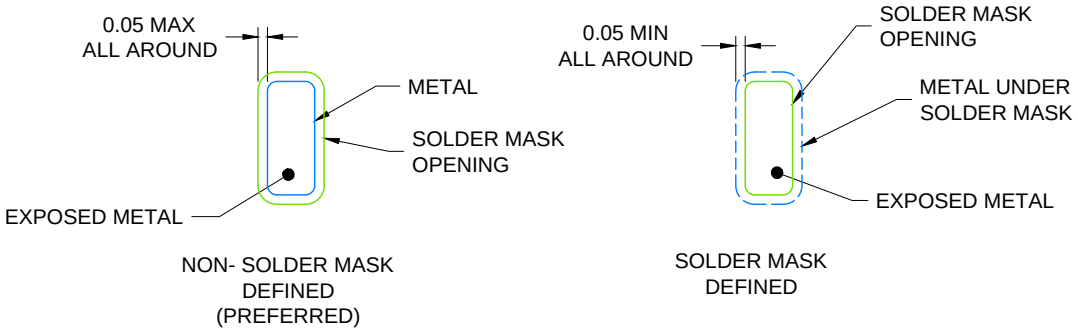

SOLDER MASK DETAILS

NOT TO SCALE

4225183/A 08/2019

NOTES: (continued)

3. For more information, see Texas Instruments literature number SLUA271 (www.ti.com/lit/slua271).
4. Solder mask tolerances between and around signal pads can vary based on board fabrication site.

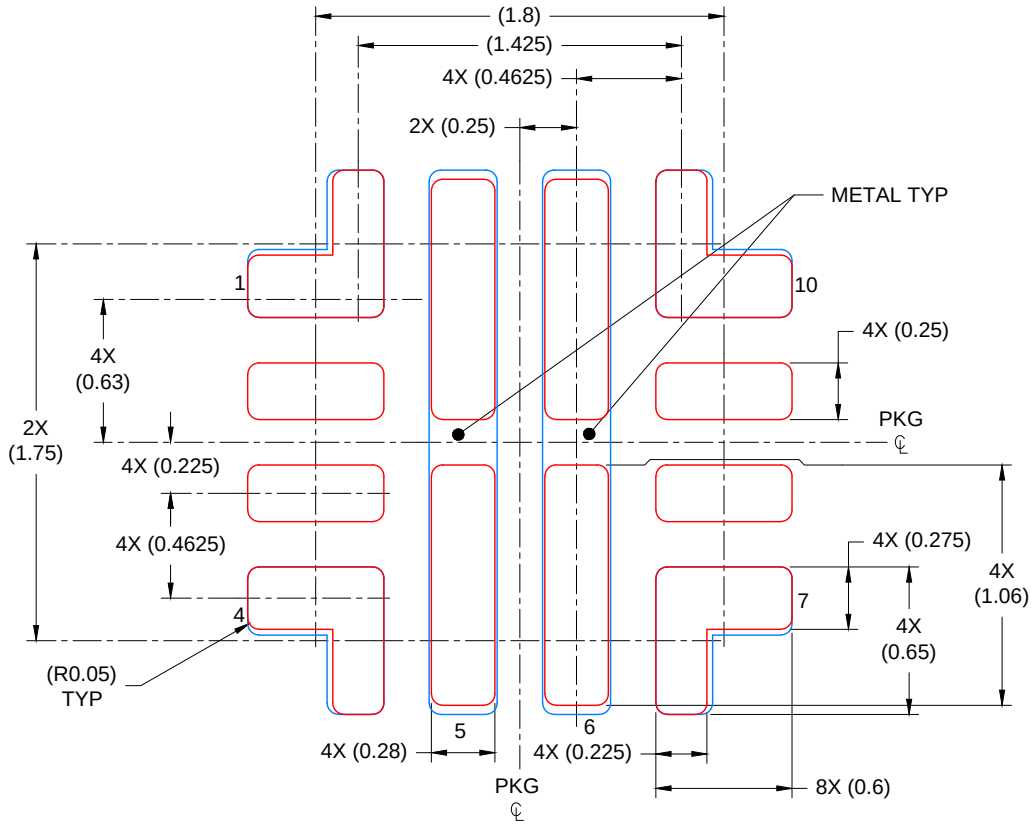

SOLDER PASTE EXAMPLE
BASED ON 0.100 mm THICK STENCIL

PADS 1, 4,7 & 10: 93%; PADS 5 & 6: 82%
SCALE: 30X

4225183/A 08/2019

NOTES: (continued)

5. Laser cutting apertures with trapezoidal walls and rounded corners may offer better paste release. IPC-7525 may have alternate design recommendations.

IMPORTANT NOTICE AND DISCLAIMER

TI PROVIDES TECHNICAL AND RELIABILITY DATA (INCLUDING DATASHEETS), DESIGN RESOURCES (INCLUDING REFERENCE DESIGNS), APPLICATION OR OTHER DESIGN ADVICE, WEB TOOLS, SAFETY INFORMATION, AND OTHER RESOURCES “AS IS” AND WITH ALL FAULTS, AND DISCLAIMS ALL WARRANTIES, EXPRESS AND IMPLIED, INCLUDING WITHOUT LIMITATION ANY IMPLIED WARRANTIES OF MERCHANTABILITY, FITNESS FOR A PARTICULAR PURPOSE OR NON-INFRINGEMENT OF THIRD PARTY INTELLECTUAL PROPERTY RIGHTS.

These resources are intended for skilled developers designing with TI products. You are solely responsible for (1) selecting the appropriate TI products for your application, (2) designing, validating and testing your application, and (3) ensuring your application meets applicable standards, and any other safety, security, regulatory or other requirements.

These resources are subject to change without notice. TI grants you permission to use these resources only for development of an application that uses the TI products described in the resource. Other reproduction and display of these resources is prohibited. No license is granted to any other TI intellectual property right or to any third party intellectual property right. TI disclaims responsibility for, and you fully indemnify TI and its representatives against any claims, damages, costs, losses, and liabilities arising out of your use of these resources.

TI’s products are provided subject to TI’s Terms of Sale, TI’s General Quality Guidelines, or other applicable terms available either on ti.com or provided in conjunction with such TI products. TI’s provision of these resources does not expand or otherwise alter TI’s applicable warranties or warranty disclaimers for TI products. Unless TI explicitly designates a product as custom or customer-specified, TI products are standard, catalog, general purpose devices.

TI objects to and rejects any additional or different terms you may propose.

Copyright © 2025, Texas Instruments Incorporated

Last updated 10/2025