THIS DRAWING IS UNPUBLISHED. RELEASED FOR PUBLICATION 20
© COPYRIGHT 20 BY TYCO ELECTRONICS CORPORATION. ALL INTERNATIONAL RIGHTS RESERVED.

LOC	DIST
GP	00

REVISIONS

P	LTR	DESCRIPTION	DATE	DWN	APVD
	A	RELEASED PER ECO-10-025263	22FEB2011	CJV	JTL

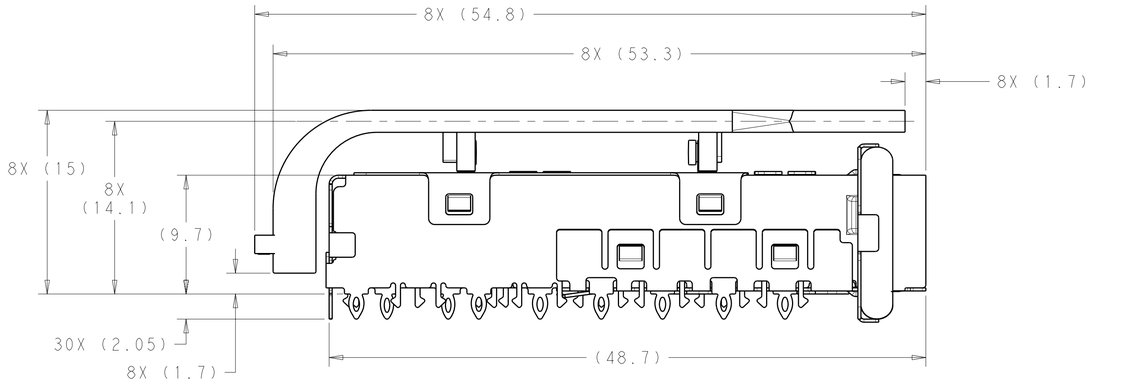

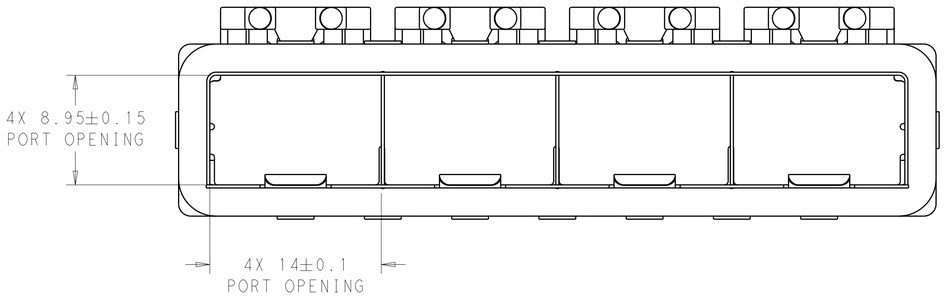

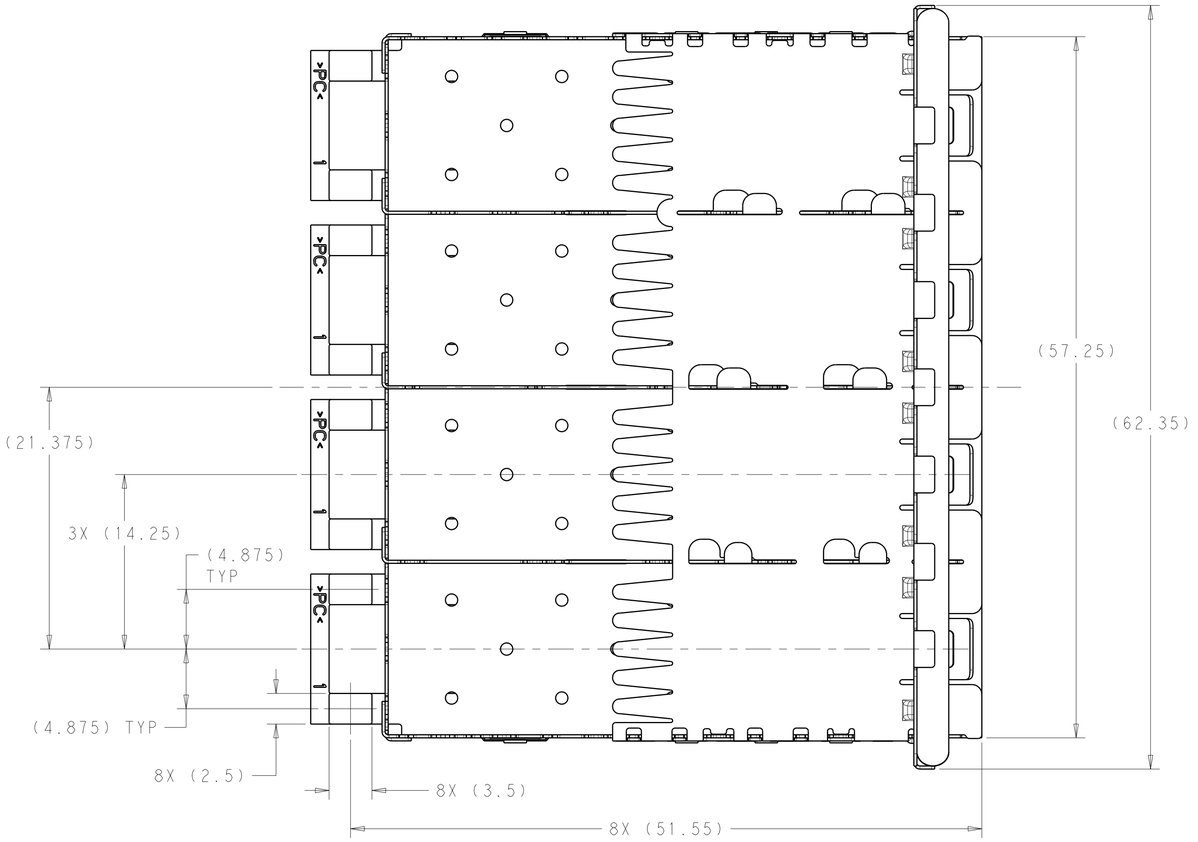

1. MATERIAL:
   CAGE ASSEMBLY: NICKEL SILVER ALLOY
   GASKET RETENTION PLATE: STAINLESS STEEL
   EMI GASKET: PLATED FILLED SILICONE
   LIGHT PIPE BRACKET: STAINLESS STEEL
   LIGHT PIPE: POLYCARBONATE, CLEAR
2. DATUM AND BASIC DIMENSION ESTABLISHED BY CUSTOMER.
3. MATES WITH SFP MSA COMPLIANT TRANSCEIVERS.
4. PADS AND VIAS CHASSIS GROUND.
5. INTERPRETATION OF DATUM REFERENCE FRAME IN ACCORDANCE WITH SECT 4.4.1.1 OF ASME Y14.5M-1994.
6. MINIMUM PC BOARD THICKNESS: SINGLE SIDED = 1.45
7. HOLE PATTERN REPEATS FOR EACH PORT. SPACING BETWEEN PORTS IS 14.25mm.
8. REFERENCE APPLICATION SPEC. 114-13120, HOLE A, FOR RECOMMENDED DRILL HOLE DIAMETER AND PLATING THICKNESS.
9. REFERENCE APPLICATION SPEC. 114-13120, HOLE B, FOR RECOMMENDED DRILL HOLE DIAMETER AND PLATING THICKNESS.
10. LIGHT PIPE ASSEMBLY SHIPPED UNASSEMBLED TO CAGE ASSEMBLY. CAGE ASSEMBLY TO BE PRESSED INTO THE PCB PRIOR TO ATTACHING THE LIGHT PIPE ASSEMBLY TO THE CAGE.

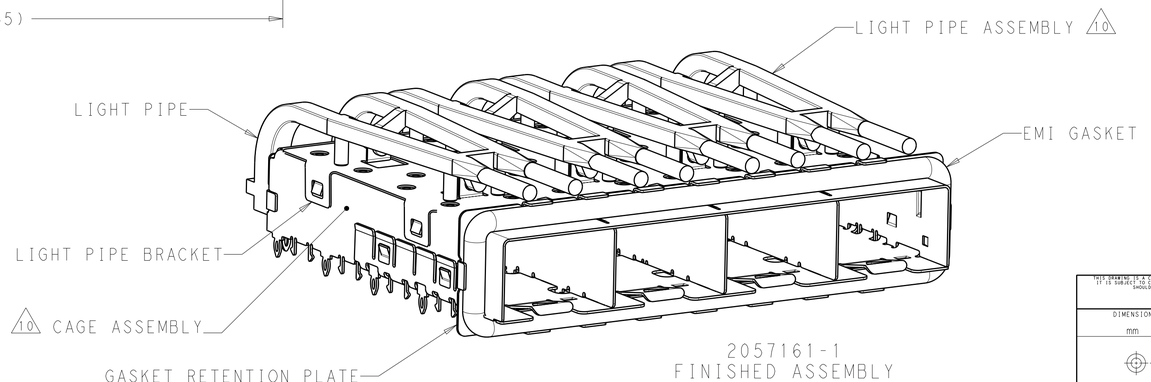

2057161-1
FINISHED ASSEMBLY
SCALE 3:1

2057161-1
PART NUMBER

THIS DRAWING IS A CONTROLLED DOCUMENT FOR TYCO ELECTRONICS CORPORATION IT IS SUBJECT TO CHANGE. SEE CONTROLLING ENGINEERING ORGANIZATION SHOULD BE CONTACTED FOR THE LATEST REVISION.

DWN	J. LIPPERT 15OCT2010
CHK	M. SCHMITT 15OCT2010
APVD	M. SCHMITT 15OCT2010
PRODUCT SPEC	-
APPLICATION SPEC	114-13120
WEIGHT	-

DIMENSIONS: mm

TOLERANCES UNLESS OTHERWISE SPECIFIED:
0 PLC ±0.1
1 PLC ±0.1
2 PLC ±0.1
3 PLC ±0.1
4 PLC ±0.1
ANGLES ±-

MATERIAL -
FINISH -

Tyco Electronics
Harrisburg, PA 17105-3608

NAME: SFP+ 1X4 ENHANCED CAGE ASSEMBLY, PRESS FIT, EMI GASKET WITH LIGHT PIPE

SIZE	CAGE CODE	DRAWING NO	RESTRICTED TO
A1	00779	C-2057161	-

CUSTOMER DRAWING | SCALE 4:1 | SHEET 1 OF 4 | REV A

4805 (2/09)

Pro/ENGINEER DRAWING

THIS DRAWING IS UNPUBLISHED. RELEASED FOR PUBLICATION 20
© COPYRIGHT 20 BY TYCO ELECTRONICS CORPORATION. ALL INTERNATIONAL RIGHTS RESERVED.

LOC	DIST
GP	00

REVISIONS

P	LTR	DESCRIPTION	DATE	DWN	APVD
	-	SEE SHEET 1	-	-	-

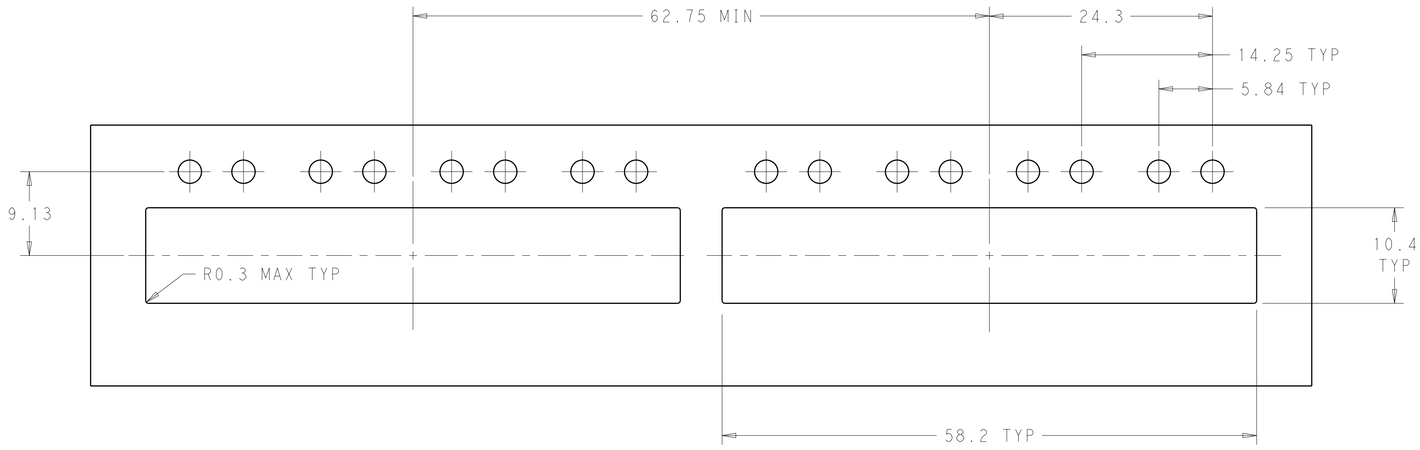

RECOMMENDED BEZEL CUT-OUT
SINGLE SIDED APPLICATIONS
SCALE 3:1

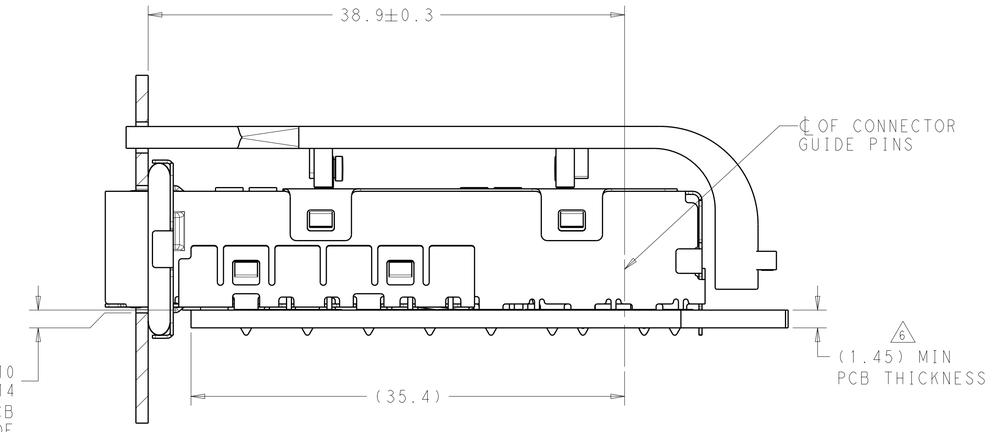

2057161-1
MOUNTED ON PCB
SHOWN THRU RECOMMENDED BEZEL

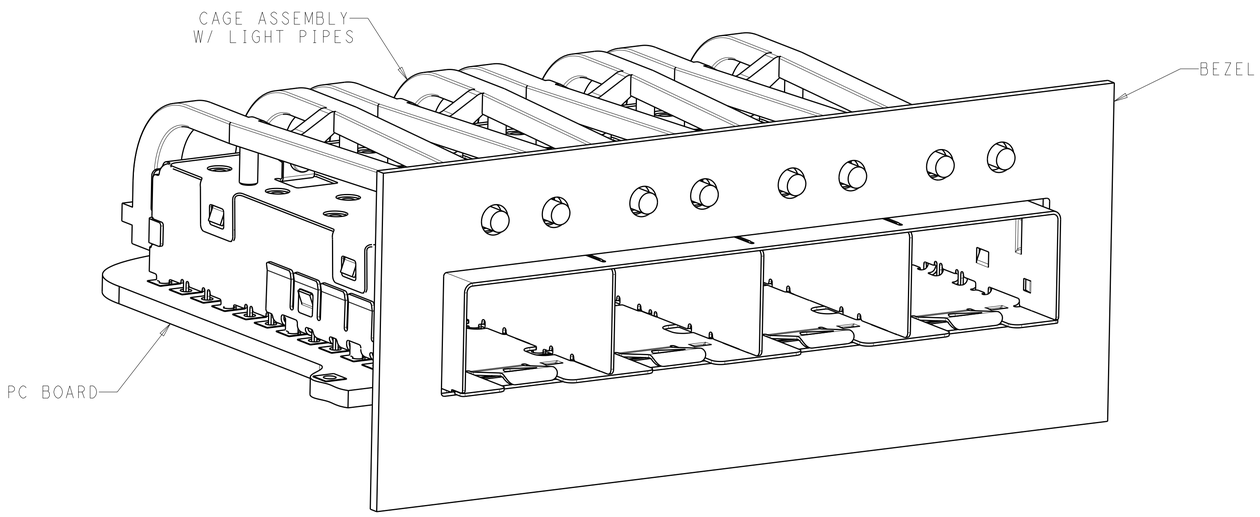

2057161-1
MOUNTED ON PCB
SHOWN THRU RECOMENDED BEZEL

THIS DRAWING IS A CONTROLLED DOCUMENT FOR TYCO ELECTRONICS CORPORATION IT IS SUBJECT TO CHANGE AND THE CONTROLLING ENGINEERING ORGANIZATION SHOULD BE CONTACTED FOR THE LATEST REVISION.

DIMENSIONS: mm

TOLERANCES UNLESS OTHERWISE SPECIFIED:
0 PLC ±0.1
1 PLC ±0.1
2 PLC ±0.1
3 PLC ±0.1
4 PLC ±0.1
ANGLES ±

MATERIAL -
FINISH -

DWN J. LIPPERT 15OCT2010
CHK M. SCHMITT 15OCT2010
APVD M. SCHMITT 15OCT2010
PRODUCT SPEC -
APPLICATION SPEC 114-13120
WEIGHT -

Tyco Electronics
Tyco Electronics
Harrisburg, PA 17105-3608

NAME SFP+ 1X4 ENHANCED CAGE ASSEMBLY, PRESS FIT, EMI GASKET WITH LIGHT PIPE

SIZE A1 | CAGE CODE 00779 | DRAWING NO C-2057161 | RESTRICTED TO -

CUSTOMER DRAWING | SCALE 4:1 | SHEET 2 OF 4 | REV A

THIS DRAWING IS UNPUBLISHED. RELEASED FOR PUBLICATION 20
© COPYRIGHT 20 BY TYCO ELECTRONICS CORPORATION. ALL INTERNATIONAL RIGHTS RESERVED.

LOC	DIST
GP	00

REVISIONS

P	LTR	DESCRIPTION	DATE	DWN	APVD
	-	SEE SHEET 1	-	-	-

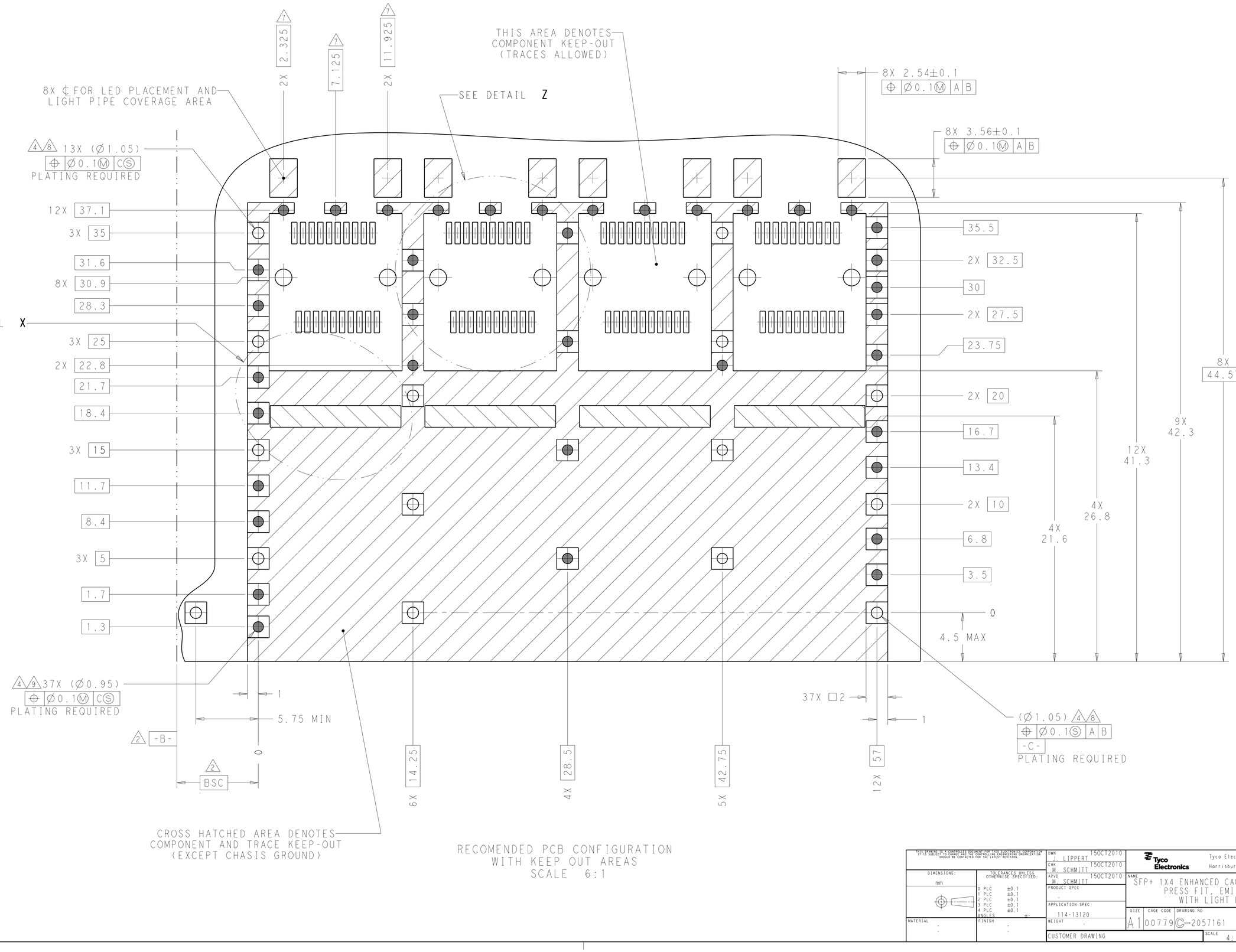

RECOMENDED PCB CONFIGURATION
WITH KEEP OUT AREAS
SCALE 6:1

THIS DRAWING IS A CONTROLLED DOCUMENT FOR TYCO ELECTRONICS CORPORATION IT IS SUBJECT TO CHANGE AND THE CONTROLLING ENGINEERING ORGANIZATION SHOULD BE CONTACTED FOR THE LATEST REVISION.

DIMENSIONS: mm

TOLERANCES UNLESS OTHERWISE SPECIFIED:
0 PLC ±0.1
1 PLC ±0.1
2 PLC ±0.1
3 PLC ±0.1
4 PLC ±0.1
ANGLES ±-

MATERIAL -
FINISH -

DWN J. LIPPERT 15OCT2010
CHK M. SCHMITT 15OCT2010
APVD M. SCHMITT 15OCT2010
PRODUCT SPEC -
APPLICATION SPEC 114-13120
WEIGHT -

Tyco Electronics
Tyco Electronics Harrisburg, PA 17105-3608

NAME SFP+ 1X4 ENHANCED CAGE ASSEMBLY, PRESS FIT, EMI GASKET WITH LIGHT PIPE

SIZE A1 | CAGE CODE 00779 | DRAWING NO C-2057161 | RESTRICTED TO -

CUSTOMER DRAWING | SCALE 4:1 | SHEET 3 OF 4 | REV A

THIS DRAWING IS UNPUBLISHED. RELEASED FOR PUBLICATION 20
© COPYRIGHT 20 BY TYCO ELECTRONICS CORPORATION. ALL INTERNATIONAL RIGHTS RESERVED.

LOC	DIST
GP	00

REVISIONS

P	LTR	DESCRIPTION	DATE	DWN	APVD
	-	SEE SHEET 1	-	-	-

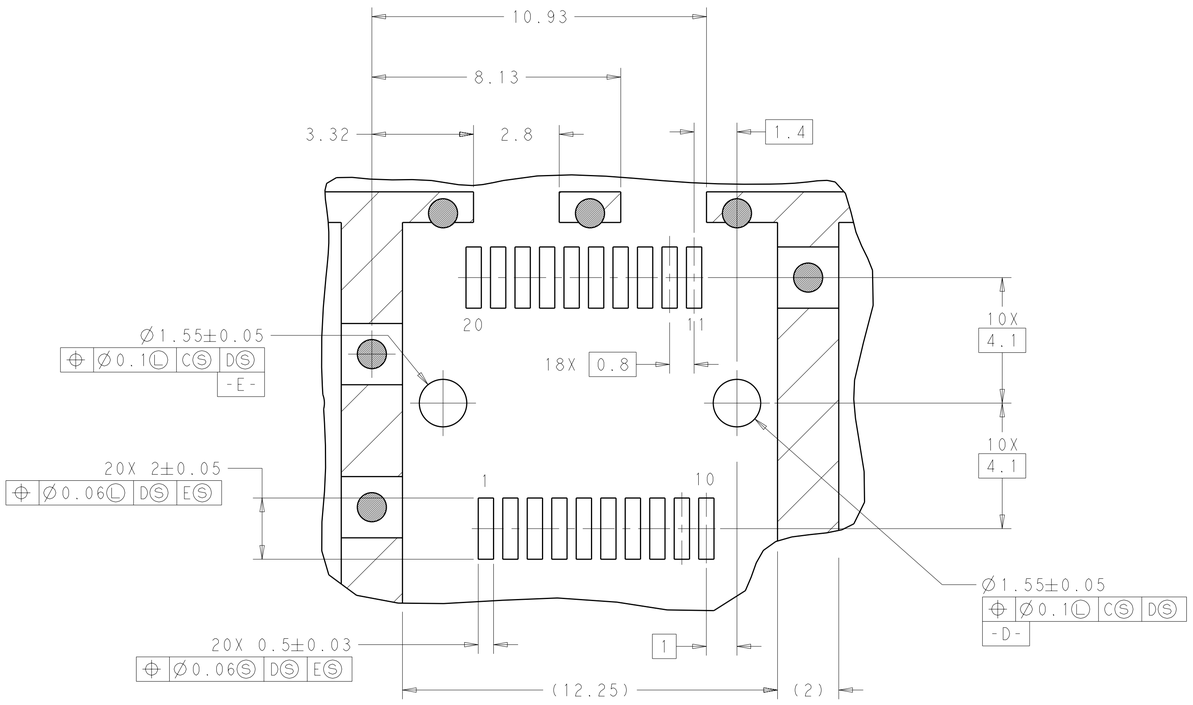

DETAIL Z
RECOMMENDED PT CONNECTOR LAYOUT
4X INDIVIDUALLY
SCALE 10:1

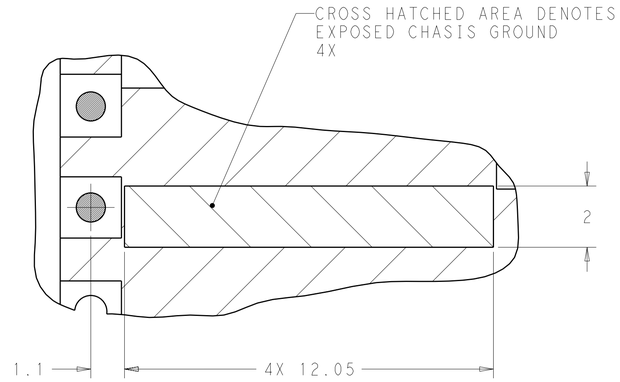

DETAIL X
SCALE 10:1

THIS DRAWING IS A CONTROLLED DOCUMENT FOR TYCO ELECTRONICS CORPORATION. IT IS SUBJECT TO CHANGE AND THE CONTROLLING ENGINEERING ORGANIZATION SHOULD BE CONTACTED FOR THE LATEST REVISION.

DIMENSIONS: mm

TOLERANCES UNLESS OTHERWISE SPECIFIED:
0 PLC ±0.1
1 PLC ±0.1
2 PLC ±0.1
3 PLC ±0.1
4 PLC ±0.1
ANGLES ±

MATERIAL -
FINISH -

DWN J. LIPPERT 15OCT2010
CHK M. SCHMITT 15OCT2010
APVD M. SCHMITT 15OCT2010
PRODUCT SPEC -
APPLICATION SPEC 114-13120
WEIGHT -

Tyco Electronics
Tyco Electronics
Harrisburg, PA 17105-3608

NAME SFP+ 1X4 ENHANCED CAGE ASSEMBLY, PRESS FIT, EMI GASKET WITH LIGHT PIPE

SIZE A1 | CAGE CODE 00779 | DRAWING NO C-2057161 | RESTRICTED TO -

CUSTOMER DRAWING | SCALE 4:1 | SHEET 4 OF 4 | REV A