H4V5H22B

Bi-directional 4.5V High Capacitance ESD

宏嘉诚科技 www.ichjc.com

DFN2020-3L Plastic-Encapsulate ESD Protection Diodes

Features

- Low leakage current
- DFN2020-3L surface mount package
- IEC 61000-4-2 (ESD Air): ±30kV
- IEC 61000-4-2 (ESD Contact): ±30kV
- IEC 61000-4-5 (Lightning 8/20μs): 280A

Reverse Working Voltage
4.5V Max.
High capacitance
800pF(Max.)

Applications

- Power Management
- Industrial Application
- Power Supply Protection

DFN2020-3L

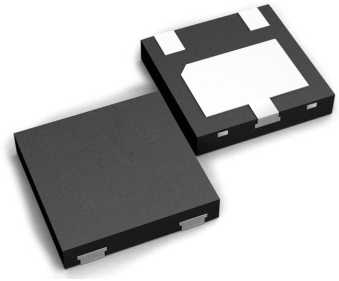

Function Diagram

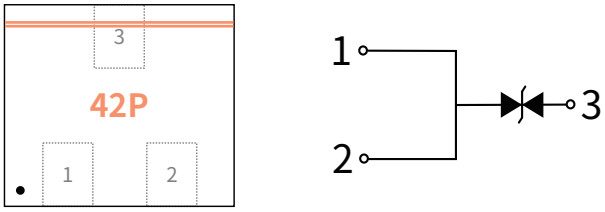

Maximum Ratings (Ta=25°C Unless otherwise specified)

SYMBOL	PARAMETER	CONDITIONS	VALUE	UNIT
V_{ESD}	Electrostatic Discharge Voltage	ESD per IEC 61000-4-2(Air)	±30	KV
		ESD per IEC 61000-4-2(Contact)	±30	KV
P_{PP}	Peak Pulse Power	tp = 8/20 μs	5880	W
I_{PP}	Rated Peak Pulse Current	tp = 8/20 μs	280	A
T_J	Operating JunctionTemperature Range	—	-55 to +125	°C
T_{STG}	Storage Temperature Range	—	-55 to +150	°C

Electrical Parameter

SYMBOL	PARAMETER
V_C	Clamping Voltage @ I_{PP}
V_{BR}	Breakdown Voltage @ I_T
I_{PP}	Peak Pulse Current
I_T	Test Current
I_R	Reverse Leakage Current @ VRWM
V_{RWM}	Peak Reverse Working Voltage
P_{PP}	Peak Pulse Power Dissipation
C_J	Junction Capacitance @ V_R=0V,f=1MHz
I_F	Forward Current
V_F	Forward Voltage @I_F

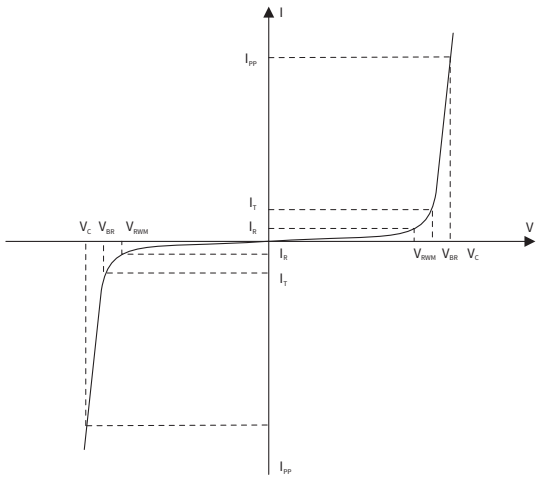

Electrical Characteristics (Ta=25°C Unless otherwise specified)

PARAMETER	SYMBOL	CONDITION	Min	Typ	Max	UNIT
Peak Reverse Working Voltage	V_{RWM}	T_a=25°C	—	—	4.5	V
Breakdown Voltage	V_{BR}	I_R=1.0mA,T_a=25°C	4.7	—	6	V
Reverse Leakage Current	I_R	V_R=4.5V,T_a=25°C	—	—	1	μA
Clamping Voltage	V_C	I_{PP}=50A, t_p=8/20μs	—	—	8.5	V
		I_{PP}=280A,t_p=8/20μs	—	—	21	
Junction Capacitance	C_J	V_R=0V,f=1MHz	—	650	800	pF

Ratings And Characteristics Curves (Ta=25°C Unless otherwise specified)

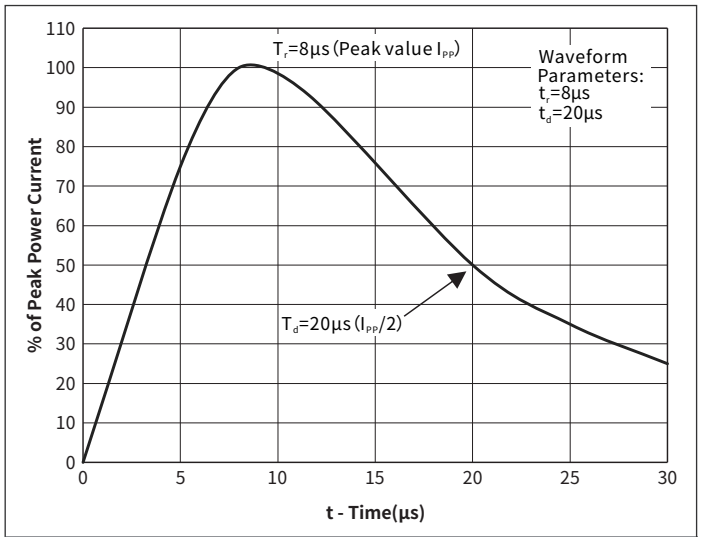

Fig.1 Pulse Waveform

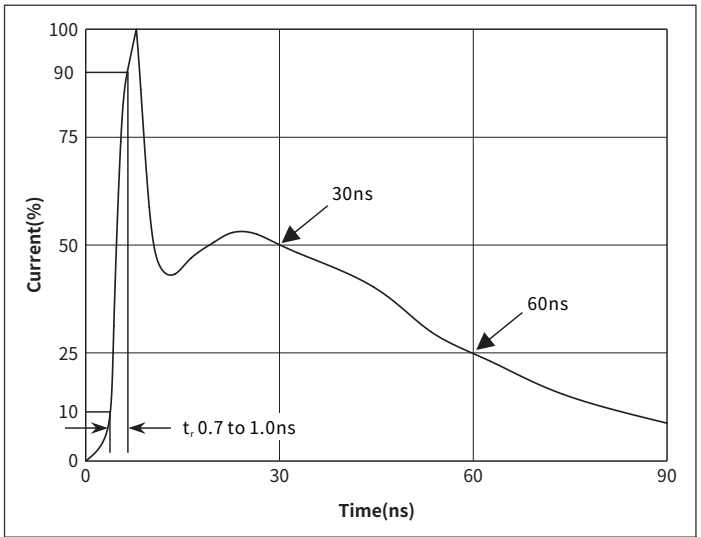

Fig.2 Pulse Waveform-ESD(IEC61000-4-2)

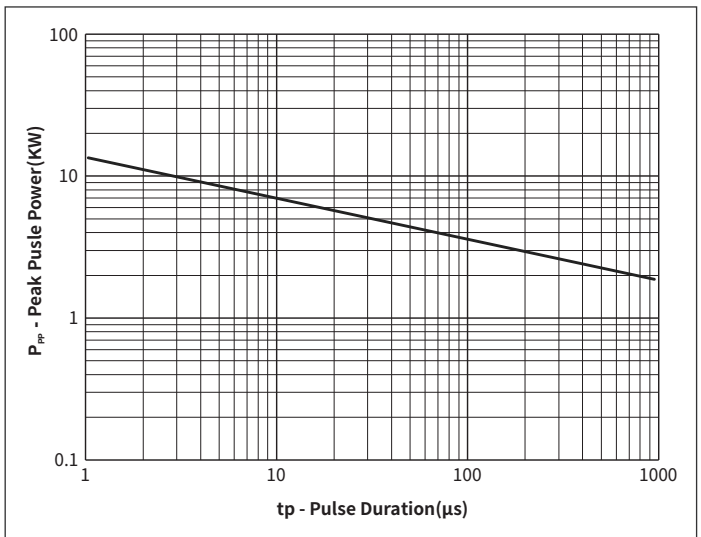

Fig.3 Peak Pulse Power vs. Pulse Time

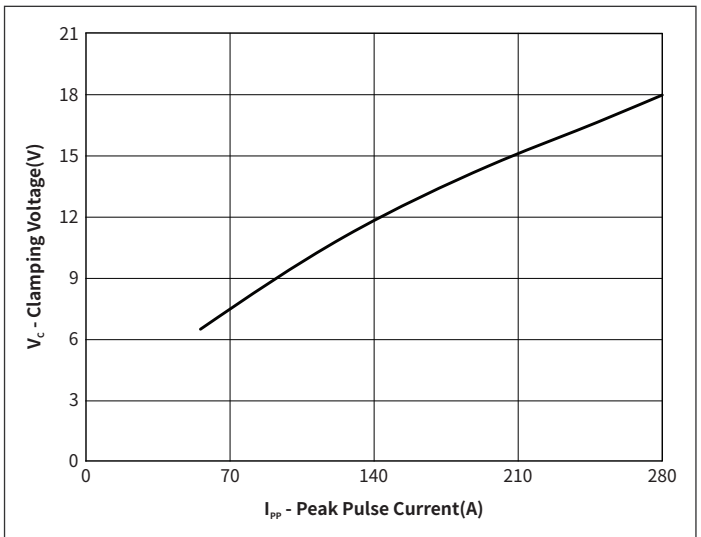

Fig.4 Clamping Voltage vs. Peak Pulse Current

Ordering Information

PREFERED P/N	PACKAGE	SIZE(mm)	DELIVERY MODE	MPQ(PCS)
H4V5H22B	DFN2020-3L	2.00×2.00×0.55	7''REEL	3000

Recommended Soldering Conditions

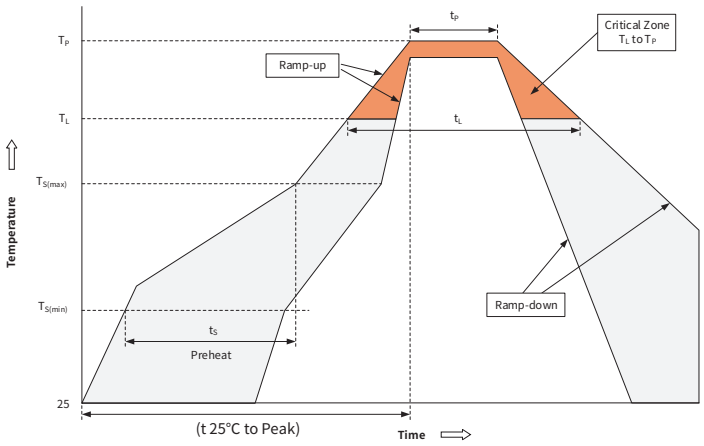

Profile Feature		Pb-Free Assembly
Pre-heat	Temperature Min ($T_{S(min)}$)	+150°C
	Temperature Max($T_{S(max)}$)	+200°C
	Time (Min to Max) (t_s)	60-180 secs.
Average ramp up rate (Liquid us Temp (T_L) to peak)		3°C /sec. Max
$T_{S(max)}$ to T_L - Ramp-up Rate		3°C /sec. Max
Reflow	Temperature(T_L)(Liquid us)	+217°C
	Temperature(t_L)	60-150 secs.
Peak Temp (T_P)		+260(+0/-5)°C
Time within 5°C of actual Peak Temp (t_P)		20-40secs
Ramp-down Rate		6°C /sec. Max
Time 25°C to Peak Temp (T_P)		8 min. Max
Do not exceed		+260°C

Package Outline Dimensions (DFN2020-3L)

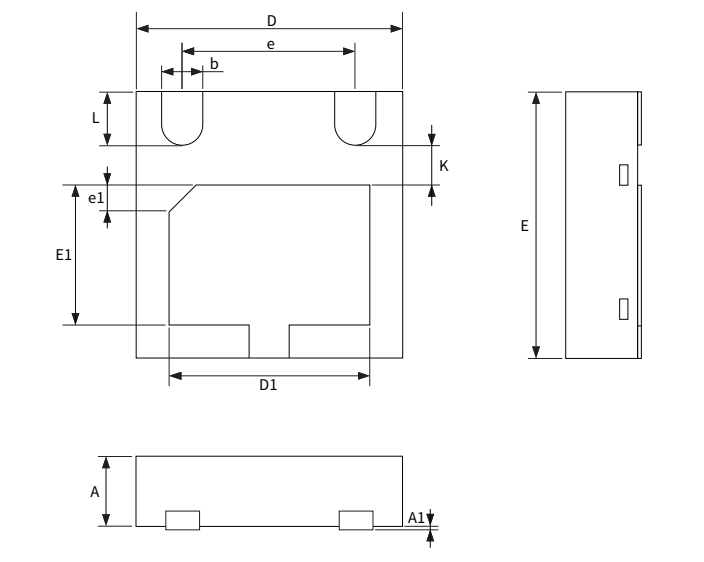

Symbol	Dimensions			
	Millimeters		Inches	
	Min.	Max.	Min.	Max.
A	0.50	0.60	0.020	0.023
A1	-	0.05	-	0.002
D	1.90	2.10	0.074	0.082
D1	1.40	1.60	0.055	0.063
E	1.90	2.10	0.074	0.082
E1	0.95	1.15	0.037	0.045
K	0.30		0.012	
e	1.30		0.051	
c	0.127		0.005	
b	0.25	0.35	0.010	0.014
L	0.35	0.45	0.014	0.018

Suggested Pad Layout

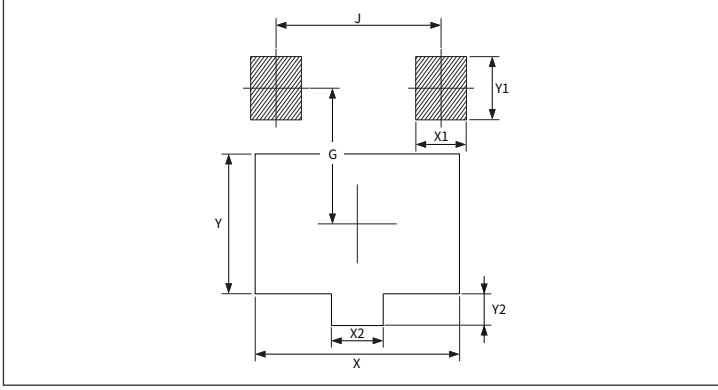

Symbol	Dimensions			
	Millimeters		Inches	
	Min.	Max.	Min.	Max.
G	1.05	1.15	0.043	0.047
J	1.25	1.35	0.051	0.055
X	1.55	1.65	0.063	0.067
X1	0.35	0.45	0.016	0.020
X2	0.35	0.45	0.016	0.020
Y	1.05	1.15	0.043	0.047
Y1	0.45	0.55	0.020	0.024
Y2	0.2	0.3	0.010	0.014