DataSheet No：E16015

Version：V2

Date：2024/03/24

睿思

# PCSK2512

## High-Precision Low-TCR Molded Alloy Current Sensing Resistor

| | |
|---|---|
| **Resistance** | **5mΩ～100mΩ** |
| **Tolerance** | **±0.5%** |
| **TCR** | **±25ppm/°C** |
| **Rated Current** | **3A~14A** |

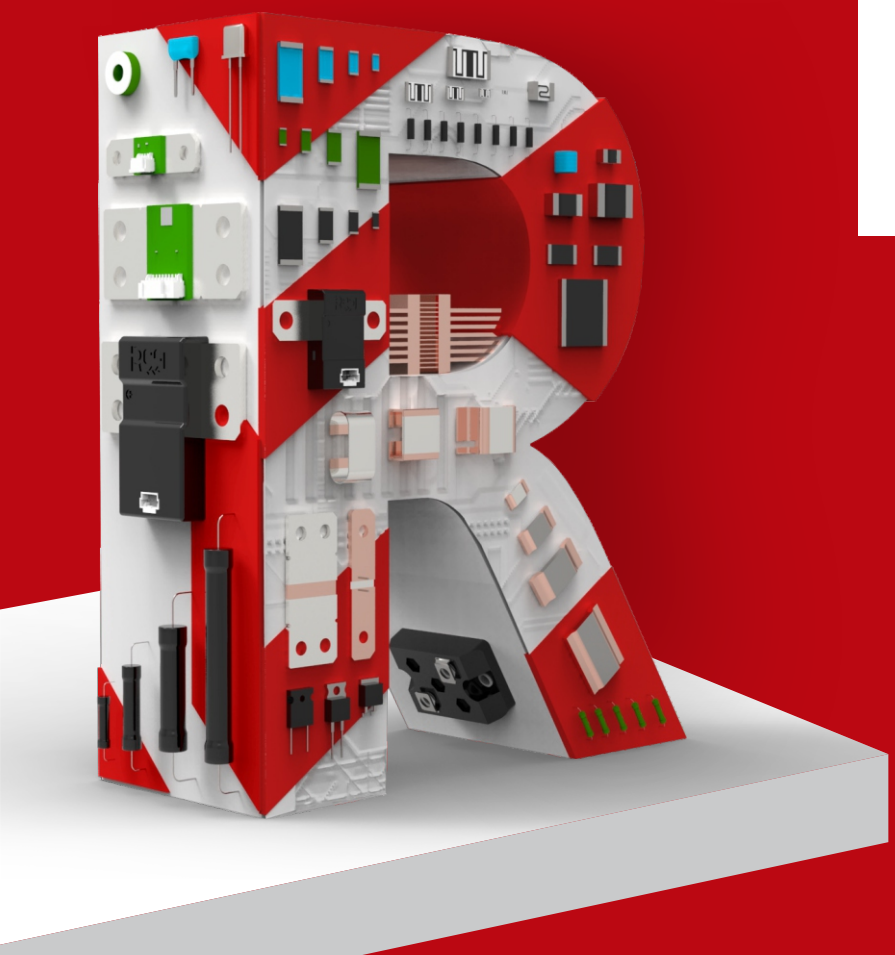

## Applications

Automotive Electronics

Precision Power Supply

Instrumentation

Formation & Sorting of Battery

Medical Equipment

**Better Solution for Sustainable High End Manufacturing**

# PCSK2512

High-Precision Low-TCR Molded Alloy Current Sensing Resistor

## Tolerance of ±0.5% and TCR of ±25ppm

## High Reliability and Stability

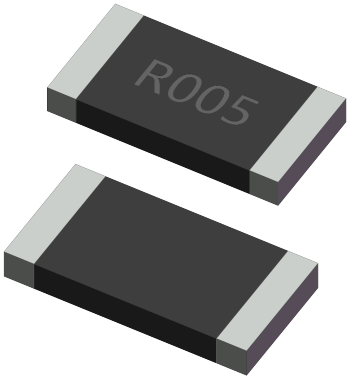


### Introduction

High-precision low-TCR molded alloy current sensing resistor adopts a resistive alloy independently developed by C&B Electronics, which undergoes precision processing, then is welded by a dedicated electron beam welding equipment independently designed and manufactured by C&B Electronics to achieve continuous welding, and then is shaped by precision stamping. Based on the control ability of the resistance alloy's consistency, precision processing ability, process control ability, and precision welding ability, the product can achieve a maximum target tolerance of ± 0.5% after precision trimming. Finally, the product is encapsulated through precision molding.

The resistance range of PCSK2512 series of products is 5mΩ~100mΩ. TCR of PCSK2512 series is ≤±25ppm/℃ within the operating temperature range from -55℃ to +125℃. By controlling the resistive alloy materials, precision electron beam welding processes and subsequent processes, the thermal EMF is significantly reduced, while significantly improving its long-term stability.

PCSK2512 series, from raw materials, core equipment, to core processes, achieves independent and controllable production, stable quality, and timely delivery. If the standard specifications cannot meet your needs, please contact our sales for consultation. Resi is committed to providing the best precision resistor solutions to meet the needs of customers in testing and measurement, power equipment, medical equipment, precision power supply, automotive electronics, formation & sorting of battery.

RoHS AEC-Q200 3D

## Electrical Parameters

| Size | Resistance | Rated Power (+70°C) | Max. Operating Current | Operating Temperature | TCR ppm/°C(+20°C Ref) | Tolerance % |
|---|---|---|---|---|---|---|
| PCSK2512 | 5mΩ~9mΩ | 1W | 10A~14A | -55°C~+170°C | ±25(-55°C~+125°C) | ±0.5<br>±1.0<br>±5.0 |
| PCSK2512 | 10mΩ~100mΩ | 1W | 3A~10A | -55°C~+170°C | ±25(-55°C~+125°C) | ±0.5<br>±1.0<br>±5.0 |

## Applications

PCSK series is applicable to AC, DC, high and low-frequency sampling circuits.


C&B Electronics Shenzhen CO., LTD. | www.resistor.today | resi@cbeureka.com | Tel:0755-82899519

# PCSK2512

High-Precision Low-TCR Molded Alloy Current Sensing Resistor

## Dimensions

**Resistor**

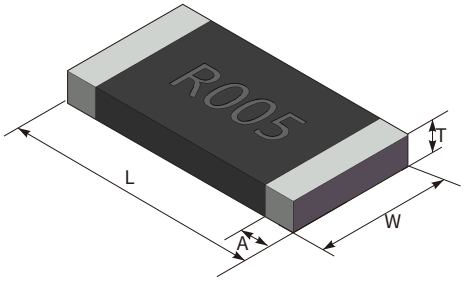


**Land Pattern**

**Unit: mm**

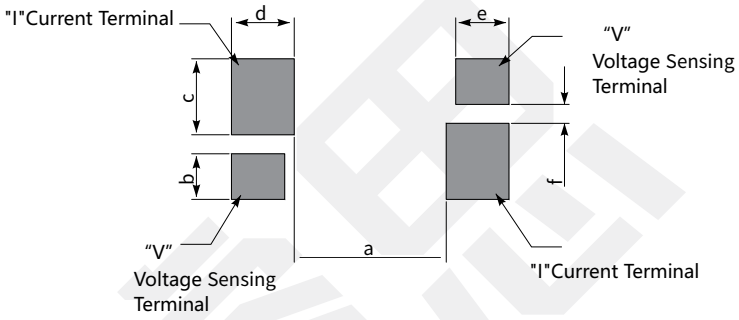


**Not following the recommended land pattern design can seriously affect the temperature coefficient measurement results and current sensing accuracy!**

| Resistance | L | W | A | T | a | b |
|---|---|---|---|---|---|---|
| 5mΩ~100mΩ | 6.4±0.2 | 3.2±0.2 | 0.8±0.2 | 0.8±0.1 | 4.0 | 1.2 |

| c | d | e | f | Packaging | Quantity Per Reel | Net Weight |
|---|---|---|---|---|---|---|
| 2.0 | 1.65 | 1.4 | 0.5 | Tape & Reel | 4000pcs | 0.07±0.02g |

## Part Number Information

Example: PCSK2512DR005P9 ( PCSK 2512 ±0.5% 5mΩ ±25ppm/°C Marked )

| P | C | S | K | 2 | 5 | 1 | 2 | D | R | 0 | 0 | 5 | P | 9 |
|---|---|---|---|---|---|---|---|---|---|---|---|---|---|---|

| Series | Size | Tolerance | Resistance[1,2] | TCR | Packaging |
|---|---|---|---|---|---|
| PCSK | 2512 | D=±0.5%<br>F=±1.0%<br>J=±5.0% | R005=5mΩ<br>R010=10mΩ<br>R100=100mΩ | P=±25ppm/°C | 9=Marked<br>6=Unmarked |

1. There are situations where the expression of resistance value exceeds four digits. 49.9mohm expresses as R0499, and 49.99mohm expresses as R04999, etc.
2. For higher/lower resistance, tighter tolerance, higher power, lower TCR and larger size, please contact us.


C&B Electronics Shenzhen CO., LTD. | www.resistor.today | resi@cbeureka.com | Tel:0755-82899519

## Performance

| Test | Test Method | Standards | Typical | Max. |
|---|---|---|---|---|
| High Temperature Storage | 1000h@+170°C, unpowered | AEC-Q200 TEST 3<br>MIL-STD-202 Method 108 | △R≤±0.1% | △R≤±0.5% |
| Thermal Shock | -55°C, 15min~ambient temperature<20s~+155°C, 15min, 1000 cycles | AEC-Q200 TEST 16<br>MIL-STD-202 Method 107 | △R≤±0.1% | △R≤±0.5% |
| Bias Humidity | +85°C, 85%RH, powered no less than 10% rated power for 1000h | AEC-Q200 TEST 7<br>MIL-STD-202 Method 103 | △R≤±0.05% | △R≤±0.5% |
| Load Life | 2000h @ +70°C, rated power, 90min on，30min off<br>+70°C refers to terminal temperature | AEC-Q200 TEST 8<br>MIL-STD-202 Method 108 | △R≤±0.5% | △R≤±1.0% |
| Resistance to Solvent | Immerse in solvent for 3 min and wipe 10 times. Three cycles of three solvents. Dry at ambient temperature after cleaning | AEC-Q200 TEST 12<br>MIL-STD-202 Method 215 | Clear marking. No visible damage | |
| Mechanical Shock | Half Sine Wave, peak acceleration 100g's, pulse duration 6ms, 3 times in each of six directions, on three different axes | AEC-Q200 TEST 13<br>MIL-STD-202 Method 213 | △R≤±0.02% | △R≤±0.05% |
| Vibration | 10-2KHz, 5g's, 20min/cycle, 12 cycles in each directions of X Y Z | AEC-Q200 TEST 14<br>MIL-STD-202 Method 204 | △R≤±0.02% | △R≤±0.05% |
| Resistance to Solder Heat | +260°C tin bath for 10s | AEC-Q200 TEST 15<br>MIL-STD-202 Method 210 | △R≤±0.05% | △R≤±0.1% |
| Solderability | +245°C tin bath for 3s | AEC-Q200 TEST 18<br>IEC 60115-1 4.17 | No visible damage.<br>95% minimum coverage | |
| TCR | -55°C and +125°C, +20°C Ref. | AEC-Q200 TEST 19<br>IEC 60115-1 4.8 | Refer to tested curve,<br>max. value ⩽ 25ppm/°C | |
| Substrate Bending | 2mm. Duration: 60s. | AEC-Q200 TEST 21<br>AEC-Q200-005 | △R≤±0.1% | △R≤±0.5% |
| Short Time Overload | 5x rated power, 5s | IEC 60115-1 4.13 | △R≤±0.1% | △R≤±0.5% |
| Low Temperature Storage | -55°C for 96h, unpowered | IEC 60068-2-1 | △R≤±0.1% | △R≤±0.5% |
| Moisture Resistance | Apply T=24 h/cycle, zero power,<br>method 7a and 7b are not required | MIL-STD-202 Method 106 | △R≤±0.02% | △R≤±0.2% |



C&B Electronics Shenzhen CO., LTD. | www.resistor.today | resi@cbeureka.com | Tel:0755-82899519

## Temperature Coefficient of Resistance Test Curve

TCR Test Curve - PCSK2512 5mΩ

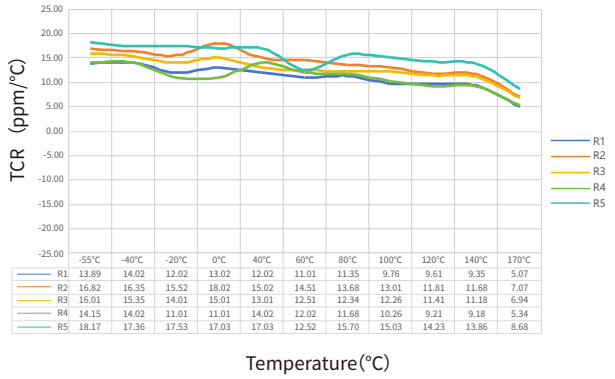


| | -55°C | -40°C | -20°C | 0°C | 40°C | 60°C | 80°C | 100°C | 120°C | 140°C | 170°C |
|---|---|---|---|---|---|---|---|---|---|---|---|
| R1 | 13.89 | 14.02 | 12.02 | 13.02 | 12.02 | 11.01 | 11.35 | 9.76 | 9.61 | 9.35 | 5.07 |
| R2 | 16.82 | 16.35 | 15.52 | 18.02 | 15.02 | 14.51 | 13.68 | 13.01 | 11.81 | 11.68 | 7.07 |
| R3 | 16.01 | 15.35 | 14.01 | 15.01 | 13.01 | 12.51 | 12.34 | 12.26 | 11.41 | 11.18 | 6.94 |
| R4 | 14.15 | 14.02 | 11.01 | 11.01 | 14.02 | 12.02 | 11.68 | 10.26 | 9.21 | 9.18 | 5.34 |
| R5 | 18.17 | 17.36 | 17.53 | 17.03 | 17.03 | 12.52 | 15.70 | 15.03 | 14.23 | 13.86 | 8.68 |

TCR Test Curve - PCSK2512 9mΩ

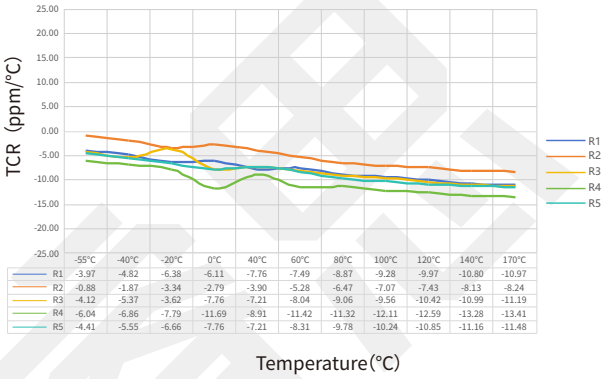


| | -55°C | -40°C | -20°C | 0°C | 40°C | 60°C | 80°C | 100°C | 120°C | 140°C | 170°C |
|---|---|---|---|---|---|---|---|---|---|---|---|
| R1 | -3.97 | -4.82 | -6.38 | -6.11 | -7.76 | -7.49 | -8.87 | -9.28 | -9.97 | -10.80 | -10.97 |
| R2 | -0.88 | -1.87 | -3.34 | -2.79 | -3.90 | -5.28 | -6.47 | -7.07 | -7.43 | -8.13 | -8.24 |
| R3 | -4.12 | -5.37 | -3.62 | -7.76 | -7.21 | -8.04 | -9.06 | -9.56 | -10.42 | -10.99 | -11.19 |
| R4 | -6.04 | -6.86 | -7.79 | -11.69 | -8.91 | -11.42 | -11.32 | -12.11 | -12.59 | -13.28 | -13.41 |
| R5 | -4.41 | -5.55 | -6.66 | -7.76 | -7.21 | -8.31 | -9.78 | -10.24 | -10.85 | -11.16 | -11.48 |

TCR Test Curve - PCSK2512 10mΩ

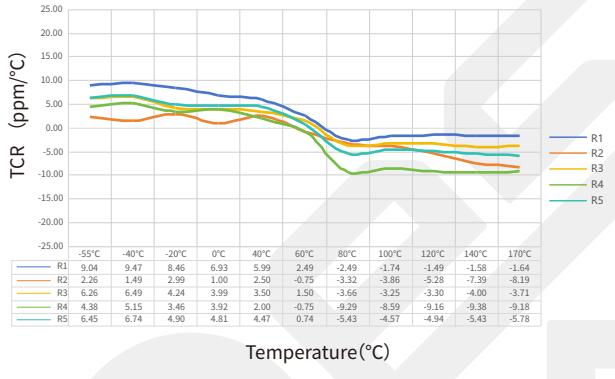


| | -55°C | -40°C | -20°C | 0°C | 40°C | 60°C | 80°C | 100°C | 120°C | 140°C | 170°C |
|---|---|---|---|---|---|---|---|---|---|---|---|
| R1 | 9.04 | 9.47 | 8.46 | 6.93 | 5.99 | 2.49 | -2.49 | -1.74 | -1.49 | -1.58 | -1.64 |
| R2 | 2.26 | 1.49 | 2.99 | 1.00 | 2.50 | -0.75 | -3.32 | -3.86 | -5.28 | -7.39 | -8.19 |
| R3 | 6.26 | 6.49 | 4.24 | 3.99 | 3.50 | 1.50 | -3.66 | -3.25 | -3.30 | -4.00 | -3.71 |
| R4 | 4.38 | 5.15 | 3.46 | 3.92 | 2.00 | -0.75 | -9.29 | -8.59 | -9.16 | -9.38 | -9.18 |
| R5 | 6.45 | 6.74 | 4.90 | 4.81 | 4.47 | 0.74 | -5.43 | -4.57 | -4.94 | -5.43 | -5.78 |

TCR Test Curve - PCSK2512 20mΩ

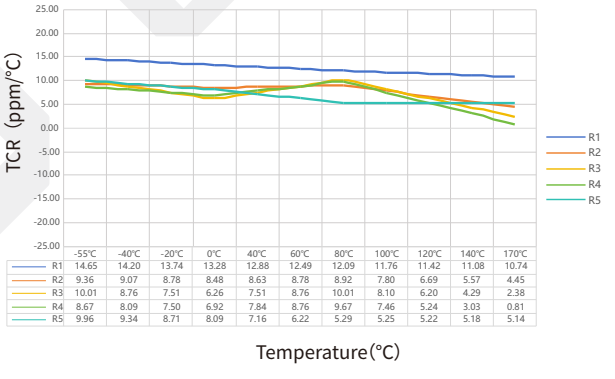


| | -55°C | -40°C | -20°C | 0°C | 40°C | 60°C | 80°C | 100°C | 120°C | 140°C | 170°C |
|---|---|---|---|---|---|---|---|---|---|---|---|
| R1 | 14.65 | 14.20 | 13.74 | 13.28 | 12.88 | 12.49 | 12.09 | 11.76 | 11.42 | 11.08 | 10.74 |
| R2 | 9.36 | 9.07 | 8.78 | 8.48 | 8.63 | 8.78 | 8.92 | 7.80 | 6.69 | 5.57 | 4.45 |
| R3 | 10.01 | 8.76 | 7.51 | 6.26 | 7.51 | 8.76 | 10.01 | 8.10 | 6.20 | 4.29 | 2.38 |
| R4 | 8.67 | 8.09 | 7.50 | 6.92 | 7.84 | 8.76 | 9.67 | 7.46 | 5.24 | 3.03 | 0.81 |
| R5 | 9.96 | 9.34 | 8.71 | 8.09 | 7.16 | 6.22 | 5.29 | 5.25 | 5.22 | 5.18 | 5.14 |

TCR Test Curve - PCSK2512 50mΩ

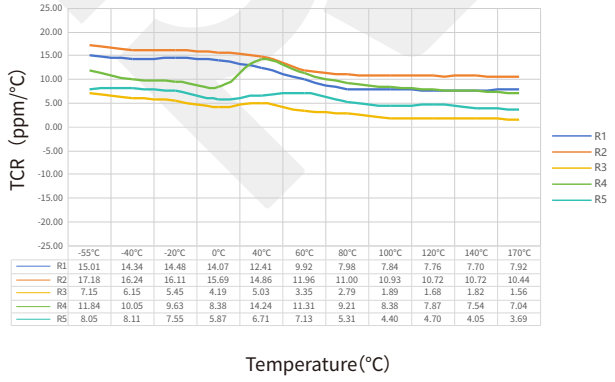


| | -55°C | -40°C | -20°C | 0°C | 40°C | 60°C | 80°C | 100°C | 120°C | 140°C | 170°C |
|---|---|---|---|---|---|---|---|---|---|---|---|
| R1 | 15.01 | 14.34 | 14.48 | 14.07 | 12.41 | 9.92 | 7.98 | 7.84 | 7.76 | 7.70 | 7.92 |
| R2 | 17.18 | 16.24 | 16.11 | 15.69 | 14.86 | 11.96 | 11.00 | 10.93 | 10.72 | 10.72 | 10.44 |
| R3 | 7.15 | 6.15 | 5.45 | 4.19 | 5.03 | 3.35 | 2.79 | 1.89 | 1.68 | 1.82 | 1.56 |
| R4 | 11.84 | 10.05 | 9.63 | 8.38 | 14.24 | 11.31 | 9.21 | 8.38 | 7.87 | 7.54 | 7.04 |
| R5 | 8.05 | 8.11 | 7.55 | 5.87 | 6.71 | 7.13 | 5.31 | 4.40 | 4.70 | 4.05 | 3.69 |

TCR Test Curve - PCSK2512 100mΩ

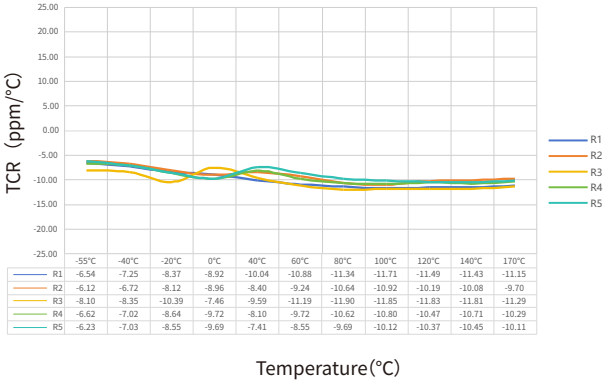


| | -55°C | -40°C | -20°C | 0°C | 40°C | 60°C | 80°C | 100°C | 120°C | 140°C | 170°C |
|---|---|---|---|---|---|---|---|---|---|---|---|
| R1 | -6.54 | -7.25 | -8.37 | -8.92 | -10.04 | -10.88 | -11.34 | -11.71 | -11.49 | -11.43 | -11.15 |
| R2 | -6.12 | -6.72 | -8.12 | -8.96 | -8.40 | -9.24 | -10.64 | -10.92 | -10.19 | -10.08 | -9.70 |
| R3 | -8.10 | -8.35 | -10.39 | -7.46 | -9.59 | -11.19 | -11.90 | -11.85 | -11.83 | -11.81 | -11.29 |
| R4 | -6.62 | -7.02 | -8.64 | -9.72 | -8.10 | -9.72 | -10.62 | -10.80 | -10.47 | -10.71 | -10.29 |
| R5 | -6.23 | -7.03 | -8.55 | -9.69 | -7.41 | -8.55 | -9.69 | -10.12 | -10.37 | -10.45 | -10.11 |

## Derating Curve

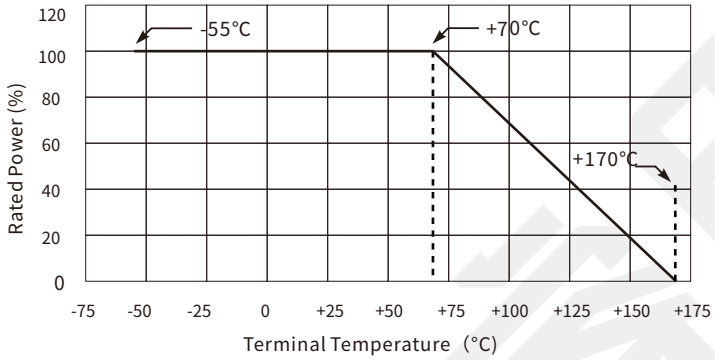


## Reflow Soldering Profile

Resistor Surface Temperature:
Pre-Heat:+150°C~+190°C, 60~120sec.
Reflow: Above+220°C, 90~150sec.
Applicable Solder Composition: Sn-Ag-Cu

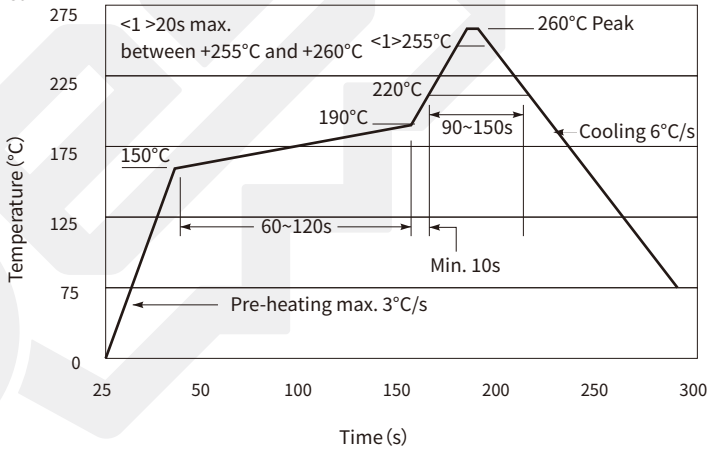



C&B Electronics Shenzhen CO., LTD. | www.resistor.today | resi@cbeureka.com | Tel:0755-82899519

## Construction

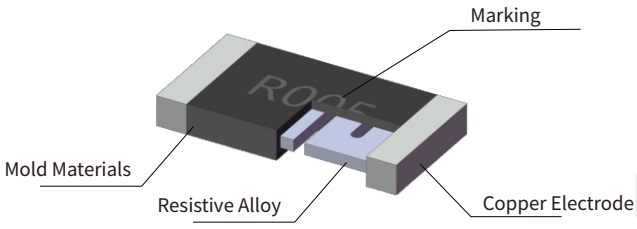


## Marking

Marking: Resistance

| Size | Illustration | Demonstration |
|---|---|---|
| 2512 | 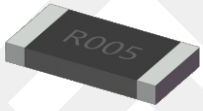 | R005：Resistance |



## Storage Instructions

(1) Resistors should be stored at a temperature of 5 to 35 °C, with a humidity of<60% RH. The humidity should be kept as low as possible.

(2) Resistors should be protected from direct sunlight.

(3) Resistors should be stored in a clean and dry environment free of harmful gases (HCl, Sulfuric acid, $H_2S$, etc.)

(4) Do not move the resistor from the packaging unless use it.

(5) Under the above storage conditions, the resistor can be stored for at least 1 year.

## Usage Suggestions

(1) Please protect the surface of the resistor during use. Prevent defects such as scratches, bumps, and oil stains on the surface.

(2) Do not use sharp tweezers to move the resistor. Scratches on the surface can cause resistance drift and resistor failure.

(3) When installing and using resistors, avoid the impact of mechanical stress on the resistor.

(4) The long-term operating power of resistors should be ⩽ rated power to avoid resistance drift caused by long-term overload.

(5) Please refer to the derating curve when operating under high temperature conditions or poor heat dissipation environment.

(6) If the operating conditions exceed the pulse specified in the pulse curve, a systematic evaluation is required.

(7) If the resistor is not used after being moved from the packaging, it should be stored under vacuum to avoid risks such as poor welding caused by oxidation of the resistor.

## Packaging

### Tape Specifications

Unit: mm

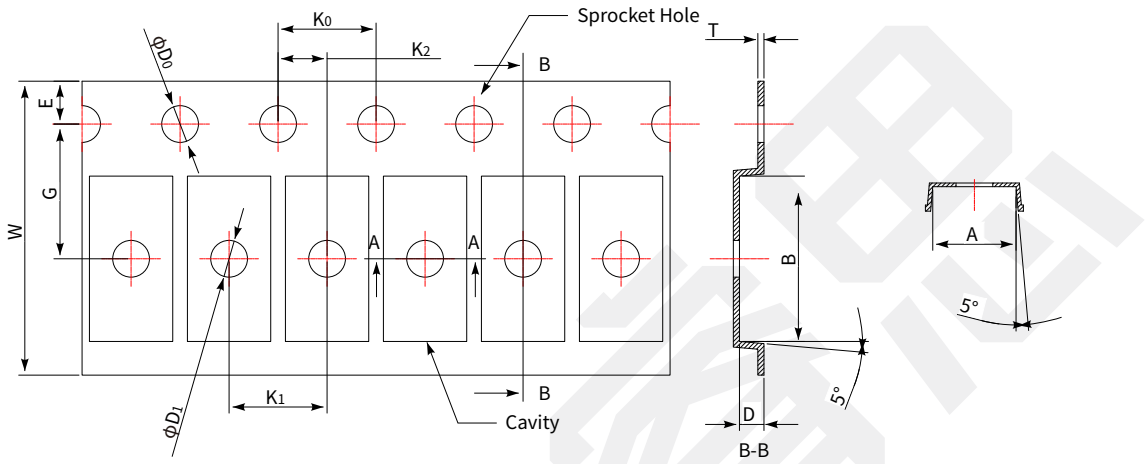


| Resistance | A | B | ϕD0 | ϕD1 | K0 | K1 | K2 | E | G | W | D | T |
|---|---|---|---|---|---|---|---|---|---|---|---|---|
| 5mΩ-100mΩ | 3.40±0.2 | 6.75±0.2 | 1.5±0.1 | 1.5±0.1 | 4.0±0.1 | 4.0±0.1 | 2.0±0.1 | 1.75±0.1 | 5.5±0.1 | 12.0±0.3 | 1.0±0.1 | 0.25±0.05 |

### Reel Specifications

Unit: mm

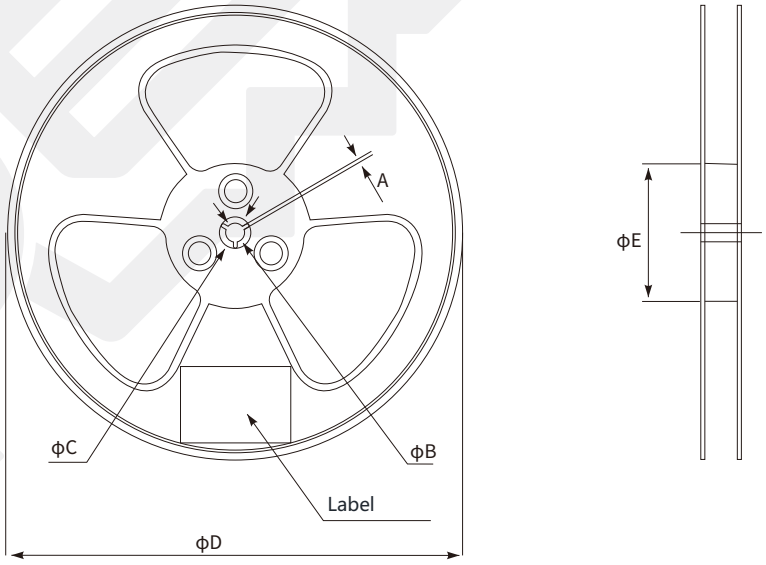


| A | ϕB | ϕC | ϕD | ϕE |
|---|---|---|---|---|
| 1.5 min. | 13.5 +0.5/-0.2 | 20.2 Min. | 178±2 | 60±2 |


C&B Electronics Shenzhen CO., LTD. | www.resistor.today | resi@cbeureka.com | Tel:0755-82899519

## Packaging

(1) 4000 pcs. resistors are packed in a tape and wrapped in a reel;

(2) Every 2 reels are packed by a cardboard sleeve case. The size of the cardboard is 180mm*180mm*35mm;

(3) Place every 8 cases into a box (64000 pcs. / box);

(4) Box size: 330mm*195mm*200mm.

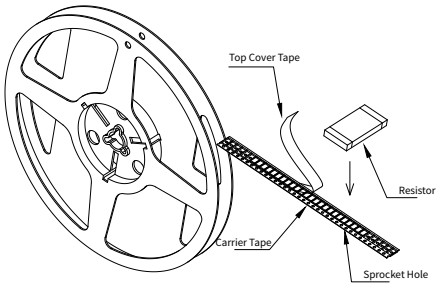


1. 4000 pcs. resistors are packed in a tape and wrapped in a reel.

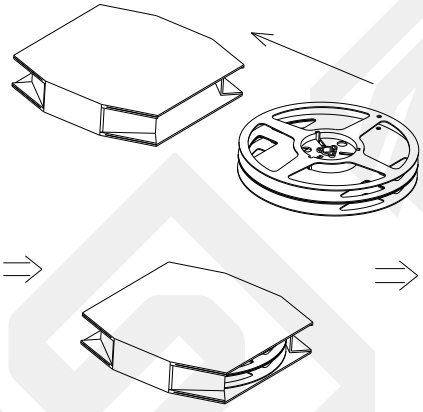

2. Every 2 reels are packed by a cardboard sleeve case. The size of the cardboard is 180mm*180mm*35mm;

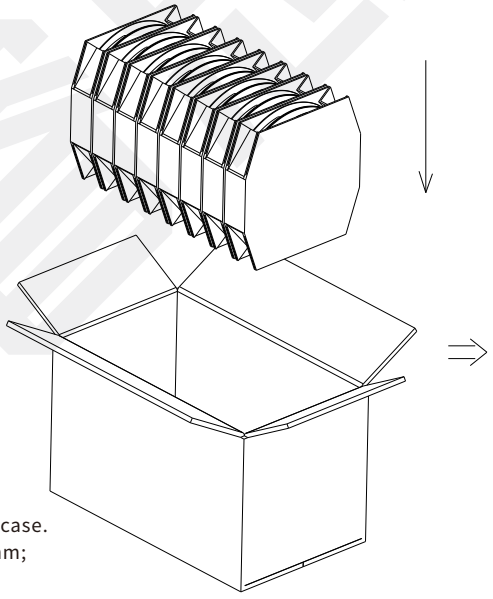

3. Place every 8 cases into a box (64000 pcs. / box).

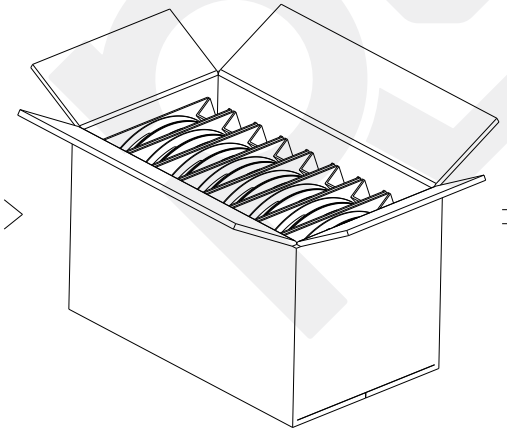

4.For the last box, 8 cardboard sleeve cases should be placed regardless of quantity of the product, preventing shaking.

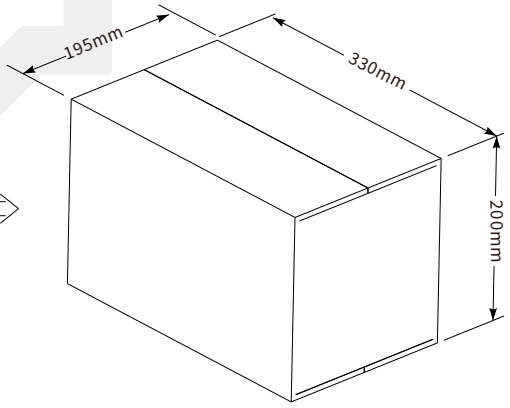


5. Box size: 330mm*195mm*200mm

## Popular Part Numbers

| Part Number | Size | Tolerance | Resistance | Marking | TCR | Power | Max. Operating Current |
|---|---|---|---|---|---|---|---|
| PCSK2512DR005P9 | 2512 | ±0.5% | 5.0mΩ | Marked | ±25ppm/°C | 1W | 14A |
| PCSK2512FR005P9 | 2512 | ±1.0% | 5.0mΩ | Marked | ±25ppm/°C | 1W | 14A |
| PCSK2512JR005P9 | 2512 | ±5.0% | 5.0mΩ | Marked | ±25ppm/°C | 1W | 14A |
| PCSK2512DR006P9 | 2512 | ±0.5% | 6.0mΩ | Marked | ±25ppm/°C | 1W | 12A |
| PCSK2512FR006P9 | 2512 | ±1.0% | 6.0mΩ | Marked | ±25ppm/°C | 1W | 12A |
| PCSK2512JR006P9 | 2512 | ±5.0% | 6.0mΩ | Marked | ±25ppm/°C | 1W | 12A |
| PCSK2512DR007P9 | 2512 | ±0.5% | 7.0mΩ | Marked | ±25ppm/°C | 1W | 11A |
| PCSK2512FR007P9 | 2512 | ±1.0% | 7.0mΩ | Marked | ±25ppm/°C | 1W | 11A |
| PCSK2512JR007P9 | 2512 | ±5.0% | 7.0mΩ | Marked | ±25ppm/°C | 1W | 11A |
| PCSK2512DR008P9 | 2512 | ±0.5% | 8.0mΩ | Marked | ±25ppm/°C | 1W | 11A |
| PCSK2512FR008P9 | 2512 | ±1.0% | 8.0mΩ | Marked | ±25ppm/°C | 1W | 11A |
| PCSK2512JR008P9 | 2512 | ±5.0% | 8.0mΩ | Marked | ±25ppm/°C | 1W | 11A |
| PCSK2512DR009P9 | 2512 | ±0.5% | 9.0mΩ | Marked | ±25ppm/°C | 1W | 10A |
| PCSK2512FR009P9 | 2512 | ±1.0% | 9.0mΩ | Marked | ±25ppm/°C | 1W | 10A |
| PCSK2512JR009P9 | 2512 | ±5.0% | 9.0mΩ | Marked | ±25ppm/°C | 1W | 10A |
| PCSK2512DR010P9 | 2512 | ±0.5% | 10mΩ | Marked | ±25ppm/°C | 1W | 10A |
| PCSK2512FR010P9 | 2512 | ±1.0% | 10mΩ | Marked | ±25ppm/°C | 1W | 10A |
| PCSK2512JR010P9 | 2512 | ±5.0% | 10mΩ | Marked | ±25ppm/°C | 1W | 10A |
| PCSK2512DR015P9 | 2512 | ±0.5% | 15mΩ | Marked | ±25ppm/°C | 1W | 8A |
| PCSK2512FR015P9 | 2512 | ±1.0% | 15mΩ | Marked | ±25ppm/°C | 1W | 8A |
| PCSK2512JR015P9 | 2512 | ±5.0% | 15mΩ | Marked | ±25ppm/°C | 1W | 8A |
| PCSK2512DR018P9 | 2512 | ±0.5% | 18mΩ | Marked | ±25ppm/°C | 1W | 7A |
| PCSK2512FR018P9 | 2512 | ±1.0% | 18mΩ | Marked | ±25ppm/°C | 1W | 7A |
| PCSK2512JR018P9 | 2512 | ±5.0% | 18mΩ | Marked | ±25ppm/°C | 1W | 7A |
| PCSK2512DR020P9 | 2512 | ±0.5% | 20mΩ | Marked | ±25ppm/°C | 1W | 7A |
| PCSK2512FR020P9 | 2512 | ±1.0% | 20mΩ | Marked | ±25ppm/°C | 1W | 7A |
| PCSK2512JR020P9 | 2512 | ±5.0% | 20mΩ | Marked | ±25ppm/°C | 1W | 7A |
| PCSK2512DR025P9 | 2512 | ±0.5% | 25mΩ | Marked | ±25ppm/°C | 1W | 6A |
| PCSK2512FR025P9 | 2512 | ±1.0% | 25mΩ | Marked | ±25ppm/°C | 1W | 6A |
| PCSK2512JR025P9 | 2512 | ±5.0% | 25mΩ | Marked | ±25ppm/°C | 1W | 6A |
| PCSK2512DR030P9 | 2512 | ±0.5% | 30mΩ | Marked | ±25ppm/°C | 1W | 5A |
| PCSK2512FR030P9 | 2512 | ±1.0% | 30mΩ | Marked | ±25ppm/°C | 1W | 5A |
| PCSK2512JR030P9 | 2512 | ±5.0% | 30mΩ | Marked | ±25ppm/°C | 1W | 5A |
| PCSK2512DR033P9 | 2512 | ±0.5% | 33mΩ | Marked | ±25ppm/°C | 1W | 5A |
| PCSK2512FR033P9 | 2512 | ±1.0% | 33mΩ | Marked | ±25ppm/°C | 1W | 5A |
| PCSK2512JR033P9 | 2512 | ±5.0% | 33mΩ | Marked | ±25ppm/°C | 1W | 5A |
| PCSK2512DR040P9 | 2512 | ±0.5% | 40mΩ | Marked | ±25ppm/°C | 1W | 5A |
| PCSK2512FR040P9 | 2512 | ±1.0% | 40mΩ | Marked | ±25ppm/°C | 1W | 5A |
| PCSK2512JR040P9 | 2512 | ±5.0% | 40mΩ | Marked | ±25ppm/°C | 1W | 5A |
| PCSK2512DR047P9 | 2512 | ±0.5% | 47mΩ | Marked | ±25ppm/°C | 1W | 4A |
| PCSK2512FR047P9 | 2512 | ±1.0% | 47mΩ | Marked | ±25ppm/°C | 1W | 4A |
| PCSK2512JR047P9 | 2512 | ±5.0% | 47mΩ | Marked | ±25ppm/°C | 1W | 4A |
| PCSK2512DR050P9 | 2512 | ±0.5% | 50mΩ | Marked | ±25ppm/°C | 1W | 4A |
| PCSK2512FR050P9 | 2512 | ±1.0% | 50mΩ | Marked | ±25ppm/°C | 1W | 4A |
| PCSK2512JR050P9 | 2512 | ±5.0% | 50mΩ | Marked | ±25ppm/°C | 1W | 4A |
| PCSK2512DR100P9 | 2512 | ±0.5% | 100mΩ | Marked | ±25ppm/°C | 1W | 3A |
| PCSK2512FR100P9 | 2512 | ±1.0% | 100mΩ | Marked | ±25ppm/°C | 1W | 3A |
| PCSK2512JR100P9 | 2512 | ±5.0% | 100mΩ | Marked | ±25ppm/°C | 1W | 3A |
| PCSK2512DR005P6 | 2512 | ±0.5% | 5.0mΩ | Unmarked | ±25ppm/°C | 1W | 14A |
| PCSK2512FR005P6 | 2512 | ±1.0% | 5.0mΩ | Unmarked | ±25ppm/°C | 1W | 14A |
| PCSK2512JR005P6 | 2512 | ±5.0% | 5.0mΩ | Unmarked | ±25ppm/°C | 1W | 14A |
| PCSK2512DR006P6 | 2512 | ±0.5% | 6.0mΩ | Unmarked | ±25ppm/°C | 1W | 12A |
| PCSK2512FR006P6 | 2512 | ±1.0% | 6.0mΩ | Unmarked | ±25ppm/°C | 1W | 12A |



C&B Electronics Shenzhen CO., LTD. | www.resistor.today | resi@cbeureka.com | Tel:0755-82899519

睿思

# PCSK2512

High-Precision Low-TCR Molded Alloy Current Sensing Resistor

## Popular Part Numbers

| Part Number | Size | Tolerance | Resistance | Marking | TCR | Power | Max. Operating Current |
|---|---|---|---|---|---|---|---|
| PCSK2512JR006P6 | 2512 | ±5.0% | 6.0mΩ | Unmarked | ±25ppm/°C | 1W | 12A |
| PCSK2512DR007P6 | 2512 | ±0.5% | 7.0mΩ | Unmarked | ±25ppm/°C | 1W | 11A |
| PCSK2512FR007P6 | 2512 | ±1.0% | 7.0mΩ | Unmarked | ±25ppm/°C | 1W | 11A |
| PCSK2512JR007P6 | 2512 | ±5.0% | 7.0mΩ | Unmarked | ±25ppm/°C | 1W | 11A |
| PCSK2512DR008P6 | 2512 | ±0.5% | 8.0mΩ | Unmarked | ±25ppm/°C | 1W | 11A |
| PCSK2512FR008P6 | 2512 | ±1.0% | 8.0mΩ | Unmarked | ±25ppm/°C | 1W | 11A |
| PCSK2512JR008P6 | 2512 | ±5.0% | 8.0mΩ | Unmarked | ±25ppm/°C | 1W | 11A |
| PCSK2512DR009P6 | 2512 | ±0.5% | 9.0mΩ | Unmarked | ±25ppm/°C | 1W | 10A |
| PCSK2512FR009P6 | 2512 | ±1.0% | 9.0mΩ | Unmarked | ±25ppm/°C | 1W | 10A |
| PCSK2512JR009P6 | 2512 | ±5.0% | 9.0mΩ | Unmarked | ±25ppm/°C | 1W | 10A |
| PCSK2512DR010P6 | 2512 | ±0.5% | 10mΩ | Unmarked | ±25ppm/°C | 1W | 10A |
| PCSK2512FR010P6 | 2512 | ±1.0% | 10mΩ | Unmarked | ±25ppm/°C | 1W | 10A |
| PCSK2512JR010P6 | 2512 | ±5.0% | 10mΩ | Unmarked | ±25ppm/°C | 1W | 10A |
| PCSK2512DR015P6 | 2512 | ±0.5% | 15mΩ | Unmarked | ±25ppm/°C | 1W | 8A |
| PCSK2512FR015P6 | 2512 | ±1.0% | 15mΩ | Unmarked | ±25ppm/°C | 1W | 8A |
| PCSK2512JR015P6 | 2512 | ±5.0% | 15mΩ | Unmarked | ±25ppm/°C | 1W | 8A |
| PCSK2512DR018P6 | 2512 | ±0.5% | 18mΩ | Unmarked | ±25ppm/°C | 1W | 7A |
| PCSK2512FR018P6 | 2512 | ±1.0% | 18mΩ | Unmarked | ±25ppm/°C | 1W | 7A |
| PCSK2512JR018P6 | 2512 | ±5.0% | 18mΩ | Unmarked | ±25ppm/°C | 1W | 7A |
| PCSK2512DR020P6 | 2512 | ±0.5% | 20mΩ | Unmarked | ±25ppm/°C | 1W | 7A |
| PCSK2512FR020P6 | 2512 | ±1.0% | 20mΩ | Unmarked | ±25ppm/°C | 1W | 7A |
| PCSK2512JR020P6 | 2512 | ±5.0% | 20mΩ | Unmarked | ±25ppm/°C | 1W | 7A |
| PCSK2512DR025P6 | 2512 | ±0.5% | 25mΩ | Unmarked | ±25ppm/°C | 1W | 6A |
| PCSK2512FR025P6 | 2512 | ±1.0% | 25mΩ | Unmarked | ±25ppm/°C | 1W | 6A |
| PCSK2512JR025P6 | 2512 | ±5.0% | 25mΩ | Unmarked | ±25ppm/°C | 1W | 6A |
| PCSK2512DR030P6 | 2512 | ±0.5% | 30mΩ | Unmarked | ±25ppm/°C | 1W | 5A |
| PCSK2512FR030P6 | 2512 | ±1.0% | 30mΩ | Unmarked | ±25ppm/°C | 1W | 5A |
| PCSK2512JR030P6 | 2512 | ±5.0% | 30mΩ | Unmarked | ±25ppm/°C | 1W | 5A |
| PCSK2512DR033P6 | 2512 | ±0.5% | 33mΩ | Unmarked | ±25ppm/°C | 1W | 5A |
| PCSK2512FR033P6 | 2512 | ±1.0% | 33mΩ | Unmarked | ±25ppm/°C | 1W | 5A |
| PCSK2512JR033P6 | 2512 | ±5.0% | 33mΩ | Unmarked | ±25ppm/°C | 1W | 5A |
| PCSK2512DR040P6 | 2512 | ±0.5% | 40mΩ | Unmarked | ±25ppm/°C | 1W | 5A |
| PCSK2512FR040P6 | 2512 | ±1.0% | 40mΩ | Unmarked | ±25ppm/°C | 1W | 5A |
| PCSK2512JR040P6 | 2512 | ±5.0% | 40mΩ | Unmarked | ±25ppm/°C | 1W | 5A |
| PCSK2512DR047P6 | 2512 | ±0.5% | 47mΩ | Unmarked | ±25ppm/°C | 1W | 4A |
| PCSK2512FR047P6 | 2512 | ±1.0% | 47mΩ | Unmarked | ±25ppm/°C | 1W | 4A |
| PCSK2512JR047P6 | 2512 | ±5.0% | 47mΩ | Unmarked | ±25ppm/°C | 1W | 4A |
| PCSK2512DR050P6 | 2512 | ±0.5% | 50mΩ | Unmarked | ±25ppm/°C | 1W | 4A |
| PCSK2512FR050P6 | 2512 | ±1.0% | 50mΩ | Unmarked | ±25ppm/°C | 1W | 4A |
| PCSK2512JR050P6 | 2512 | ±5.0% | 50mΩ | Unmarked | ±25ppm/°C | 1W | 4A |
| PCSK2512DR100P6 | 2512 | ±0.5% | 100mΩ | Unmarked | ±25ppm/°C | 1W | 3A |
| PCSK2512FR100P6 | 2512 | ±1.0% | 100mΩ | Unmarked | ±25ppm/°C | 1W | 3A |
| PCSK2512JR100P6 | 2512 | ±5.0% | 100mΩ | Unmarked | ±25ppm/°C | 1W | 3A |


C&B Electronics Shenzhen CO., LTD. | www.resistor.today | resi@cbeureka.com | Tel:0755-82899519

## Revision

| Version | Revised Content | Date | Approver |
|---|---|---|---|
| V0 | Initial Issue | 2023.02.14 | LWW |
| V1 | Add ±5% tolerance specifications. | 2023.05.25 | LWW |
| V2 | Change datasheet to the new template.<br>Add 5-9mΩ specifications.<br>Add product reliability information and packaging information. | 2024.03.24 | LWW |

## Disclaimer

All products, datasheets and data can be changed without prior notice.

C&B Electronics Shenzhen CO., LTD., its affiliates, distributors, employees, and any other person acting on its behalf (collectively referred to as "C&B Electronics") shall not bear any legal responsibility for any errors, inaccuracies, or incompleteness of information related to the product disclosed under this agreement or other disclosures.

Product datasheet does not constitute an extension or revision of the purchase terms and conditions in C&B Electronics, including but not limited to the warranties under this agreement.

Unless specified in the purchase terms and conditions, C&B Electronics makes no guarantees, representations or warranties.

**To the maximum extent permitted by applicable laws, C&B Electronics hereby makes the following disclaimer:**
**(1) All liabilities arising from the use of the product;**
**(2) Including but not limited to all liabilities arising from special, indirect or incidental damages;**
**(3) All implied warranties, including warranties of suitability for special purposes, non infringement possibility, and marketability.**

The information provided in the datasheet and parameter tables may vary in different applications, and the performance of the product may change over time. The recommended application instructions for the product are based on C&B Electronics' understanding and experience of typical requirements. Customers are obligated to verify whether the product is suitable for a specific application based on the parameters provided in the datasheet . Before officially installing or using the product, you should ensure that you have obtained the latest version of relevant information, which can be obtained through the website: resistor.today.

The signing of this agreement does not constitute an express, implied or other form of license related to all intellectual property rights of C&B Electronic Products.

Unless explicitly stated, the products listed in this agreement are not applicable to lifesaving or life sustaining products. In the absence of a clear indication, the customer shall bear all risks caused by unauthorized use of the above products and agree to fully compensate C&B Electronics for all losses caused by such sales or use. For written product terms for such special applications, please contact authorized personnel from C&B Electronics to obtain.

The names and markings on the listed products may be trademarks owned by others.