Mechanical interlock

Mechanical interlock, AR9

- for contactor frames 9A 12A 18A 22A 32A 40A 50A 65A 75A 85A



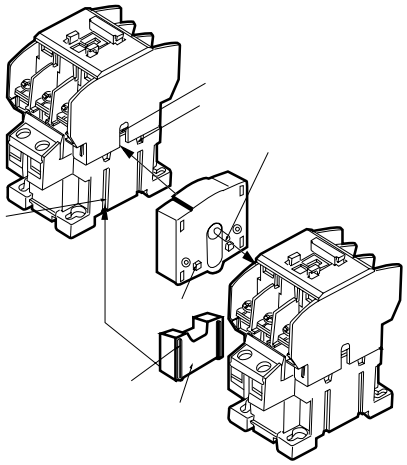

Mechanical interlock, AR100 and AR180

AR100 : 100A 125A 150A **AR180 :** 180A 220A 300A 400A

100A 125A 180A 220A 300A 400A
for 4 pole contactor

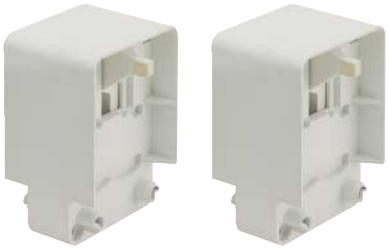

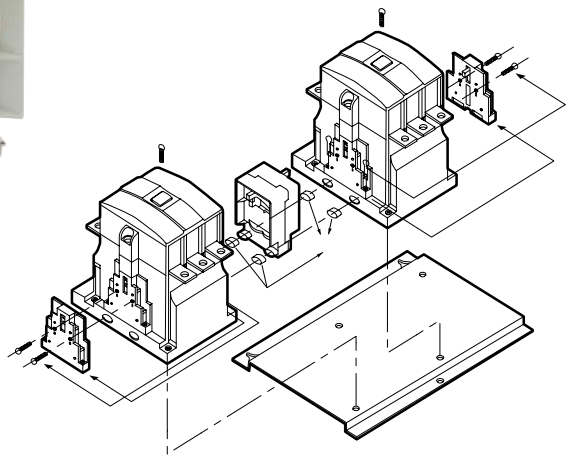

Mechanical interlock, AR600

- for contactor frames 600A 800A

