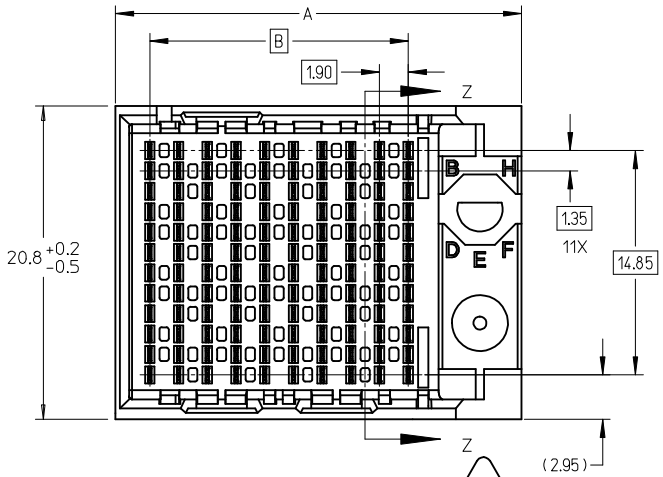

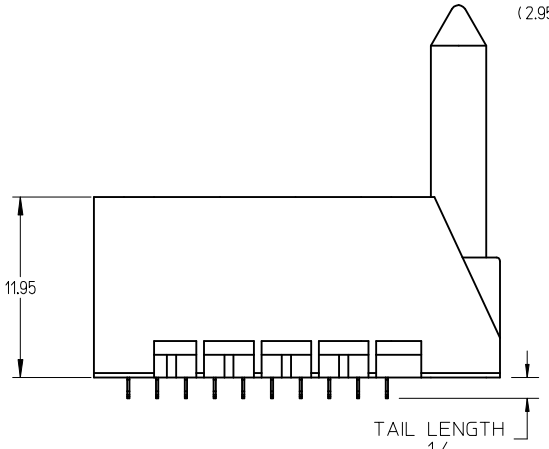

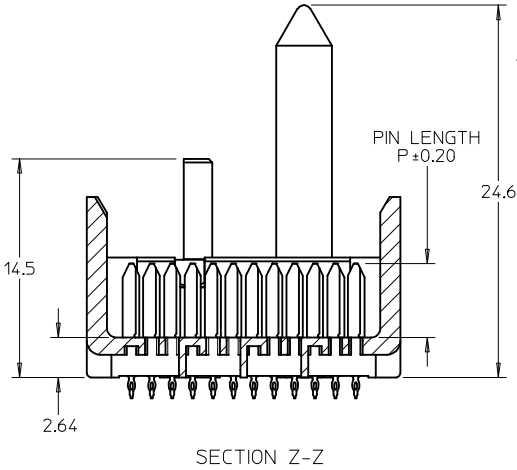

SECTION Z-Z

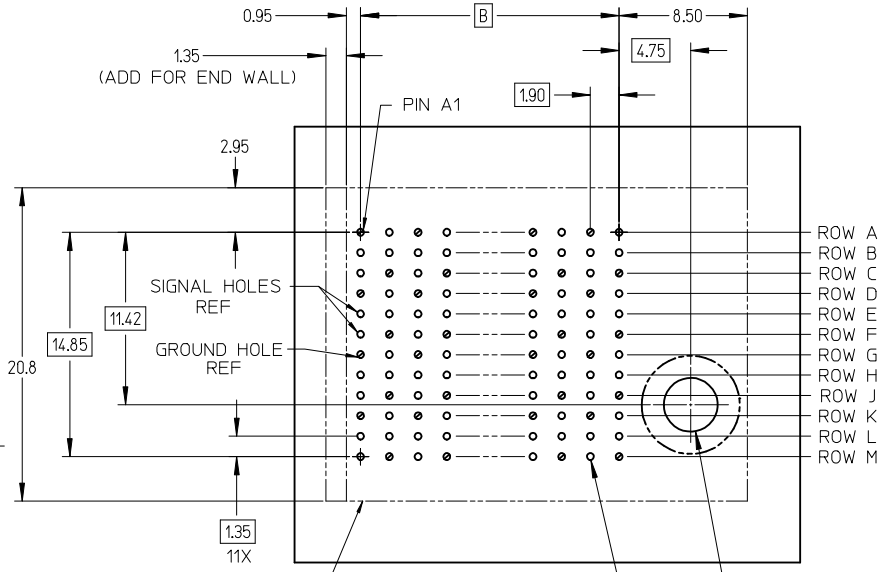

RIGHT GUIDED
BACKPLANE HOLE PATTERN
(CONNECTOR SIDE)
SEE NOTE 6

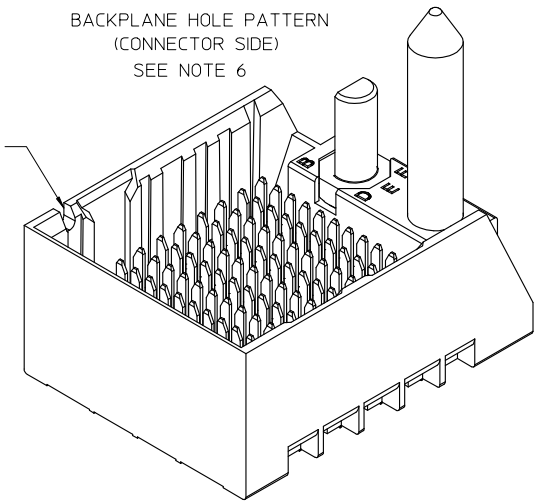

NOTES:

1. MATERIALS: HOUSING - LIQUID CRYSTAL POLYMER (LCP)
   GLASS-FILLED, UL94V-0
   TERMINALS - HIGH PERFORMANCE COPPER ALLOY
2. FINISH: 5 MICROINCH MINIMUM GOLD FLASH OVER 20 MICROINCH MINIMUM
   Pd-Ni IN CONTACT AREA. SELECTIVE TIN ON PCB TAILS. NICKEL OVERALL.
3. REFER TO MOLEX PRODUCT SPECIFICATION PS-170540-999
   FOR PERFORMANCE SPECIFICATIONS AND ADDITIONAL PCB INFORMATION.
4. REFER TO MOLEX PCB ROUTING GUIDE AS-76060-990 FOR ANTIPAD AND ROUTING RECOMMENDATIONS.
5. CONNECTORS SUPPLIED WITH A 2-56 UNC-2A SCREW.
6. "THESE DIMENSIONS REPRESENT THE AREA NEEDED TO ACCOMMODATE CONNECTOR INSERTION AND REPAIR ON THE PC BOARD. THIS IS REFERRED TO AS THE "CONNECTOR KEEP OUT ZONE" AND DOES NOT REPRESENT THE ACTUAL PERIMETER OF THE CONNECTOR. WHEN LAYING OUT THE PC BOARD FOR CONNECTORS STACKED TOGETHER, USE A 1.9mm PROGRESSION."
7. THIS PART CONFORMS TO MOLEX COSMETIC SPEC PS-45499-002 CLASS B.
8. PARTS PACKAGED PER PK-70873-757.
9. SEE SHEETS 2 & 3 FOR PART NUMBERS AND BOARD RELATIONSHIPS.
10. FOR GROUNDED GUIDE PINS USE Ø. 3.56 +/-0.08 (PTH), Ø. 3.66 (DRILL) & Ø 6.5 (PAD).
11. KEEP OUT ZONE FOR BP HOUSING LENGTH INCLUDES AN ADDITIONAL 1.0MM TO ACCOMMODATE FOR SPACE REQUIRED BY DC FRONT HOUSING.
12. MINIMUM CIRCUIT BOARD THICKNESS: 1.0mm

Pd-Ni
PLATING

REV	DESCRIPTION	
A	INITIAL RELEASE	
	EC NO: UCP2016-2332	2015/12/08
	DRWN:SVANG01	2015/12/08
	CHKD:MWOLFE	2015/12/17
	APPR:SMILLER	

QUALITY SYMBOLS
E =0
E =0
E =0

GENERAL TOLERANCES (UNLESS SPECIFIED)

	mm	INCH
4 PLACES	± ---	± ---
3 PLACES	± ---	± ---
2 PLACES	± 0.13	± ---
1 PLACE	± 0.25	± ---
0 PLACE	± ---	± ---
ANGULAR ±1/2°		

DRAFT WHERE APPLICABLE MUST REMAIN WITHIN DIMENSIONS

DIMENSION STYLE: MM ONLY	SCALE: 4:1	DESIGN UNITS: METRIC	THIRD ANGLE PROJECTION
DRAWN BY: SVANG01 DATE: 2015/12/08			
CHECKED BY: MWOLFE DATE: 2015/12/08			
APPROVED BY: SMILLER DATE: 2015/12/17			
MATERIAL NO.: SEE CHART			
SIZE: C			

TITLE: IMPACT 4-PAIR 85-OHM RIGHT GUIDED BP PDNI ASSEMBLY SALES DRAWING

molex

DOCUMENT NO.: RSD-173429-003

SHEET NO.: 1 OF 3

THIS DRAWING CONTAINS INFORMATION THAT IS PROPRIETARY TO MOLEX INCORPORATED AND SHOULD NOT BE USED WITHOUT WRITTEN PERMISSION

PART NUMBER CHART

MATERIAL NUMBER	# OF COLUMNS	# OF DIFF PAIR	DIM "A"	DIM "B"	
173429-93**	6	24	19.3	9.50	GUIDE RIGHT END WALL OPTION
173429-98**	8	32	23.1	13.30	
173429-91**	10	40	26.9	17.10	
173429-92**	12	48	30.7	20.90	
173429-94**	14	56	34.5	24.70	
173429-96**	16	64	38.3	28.50	

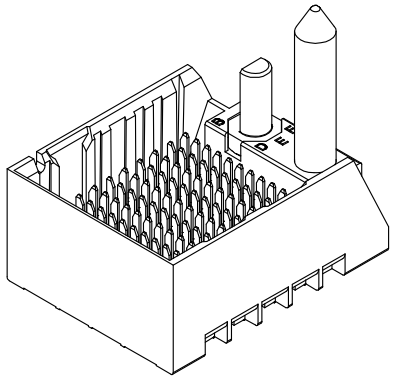

GUIDE RIGHT
END WALL OPTION

MATERIAL NUMBER	# OF COLUMNS	# OF DIFF PAIR	DIM "A"	DIM "B"	
173429-53**	6	24	17.9	9.50	GUIDE RIGHT OPEN WALL OPTION
173429-58**	8	32	21.7	13.30	
173429-51**	10	40	25.5	17.10	
173429-52**	12	48	29.3	20.90	
173429-54**	14	56	33.1	24.70	
173429-56**	16	64	36.9	28.50	

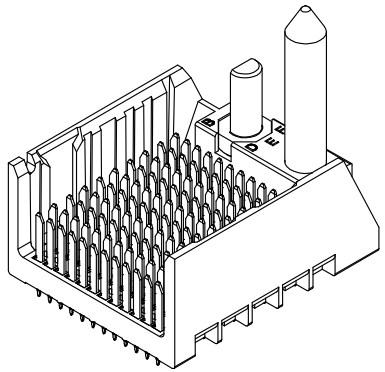

GUIDE RIGHT
OPEN WALL OPTION

PART NUMBER LOGIC

173429-****

MODULE TYPE
5 = GUIDE RIGHT, MATTE TIN
9 = GUIDE RIGHT END WALL, MATTE TIN

PIN LENGTH (P)
3 = 4.50 (SHORT COMPLIANT, 0.46±0.05 PTH)
4 = 4.90 (SHORT COMPLIANT, 0.46±0.05 PTH)
5 = 5.50 (SHORT COMPLIANT, 0.46±0.05 PTH)
6 = 4.50 (MICRO COMPLIANT, 0.39±0.05 PTH)
7 = 4.90 (MICRO COMPLIANT, 0.39±0.05 PTH)
8 = 5.50 (MICRO COMPLIANT, 0.39±0.05 PTH)

# OF COLUMNS
1 = 10 COL
2 = 12 COL
3 = 6 COL
4 = 14 COL
6 = 16 COL
8 = 8 COL

KEY ORIENTATION
0 = NO KEY
1 = A
2 = B
3 = C
4 = D
5 = E
6 = F
7 = G
8 = H

SEE SHEET 1
EC NO: UCP2016-2332 2015/12/08
DRWN:SVANG01 2015/12/08
CHKD:MWOLFE 2015/12/17
APPR:SMILLER 2015/12/17
DESCRIPTION
A
REV

QUALITY SYMBOLS
E1 =0
E2 =0
E3 =0

GENERAL TOLERANCES (UNLESS SPECIFIED)

	mm	INCH
4 PLACES	± ---	± ---
3 PLACES	± ---	± ---
2 PLACES	± 0.13	± ---
1 PLACE	± 0.25	± ---
0 PLACE	± ---	± ---

ANGULAR ±1/2°
DRAFT WHERE APPLICABLE MUST REMAIN WITHIN DIMENSIONS

DIMENSION STYLE: MM ONLY
SCALE: 1:1
DESIGN UNITS: METRIC
THIRD ANGLE PROJECTION

DRAWN BY: SVANG01 DATE: 2015/12/08
CHECKED BY: MWOLFE DATE: 2015/12/08
APPROVED BY: SMILLER DATE: 2015/12/17

TITLE: IMPACT 4-PAIR 85-OHM RIGHT GUIDED BP PDNI ASSEMBLY SALES DRAWING

molex

MATERIAL NO.: SEE CHART
DOCUMENT NO.: RSD-173429-003
SHEET NO.: 2 OF 3
SIZE: C

THIS DRAWING CONTAINS INFORMATION THAT IS PROPRIETARY TO MOLEX INCORPORATED AND SHOULD NOT BE USED WITHOUT WRITTEN PERMISSION

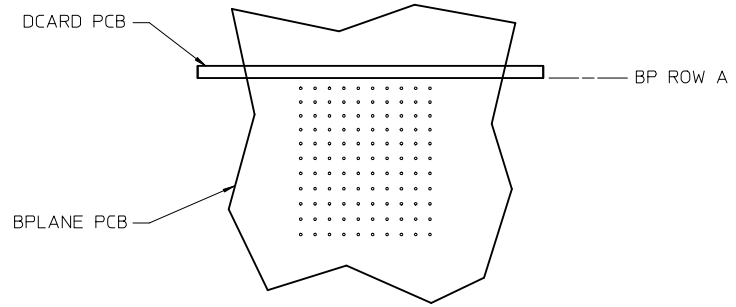

IMPACT 4 PAIR BOARD RELATIONSHIPS

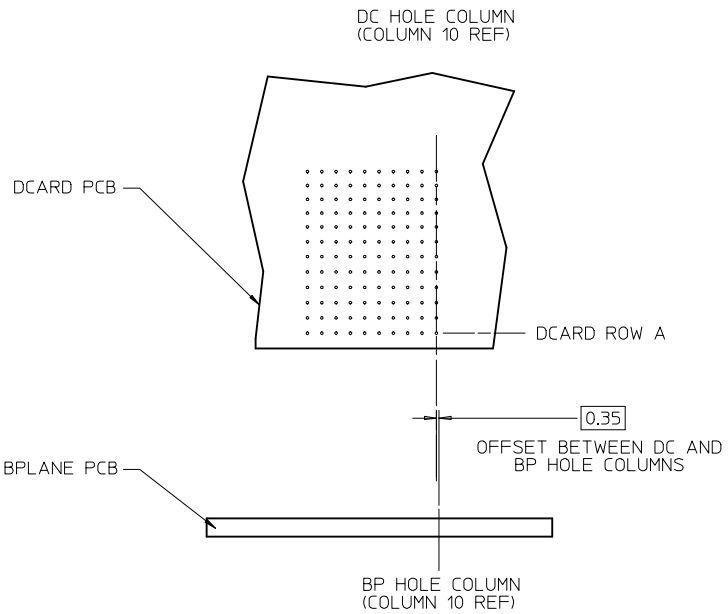

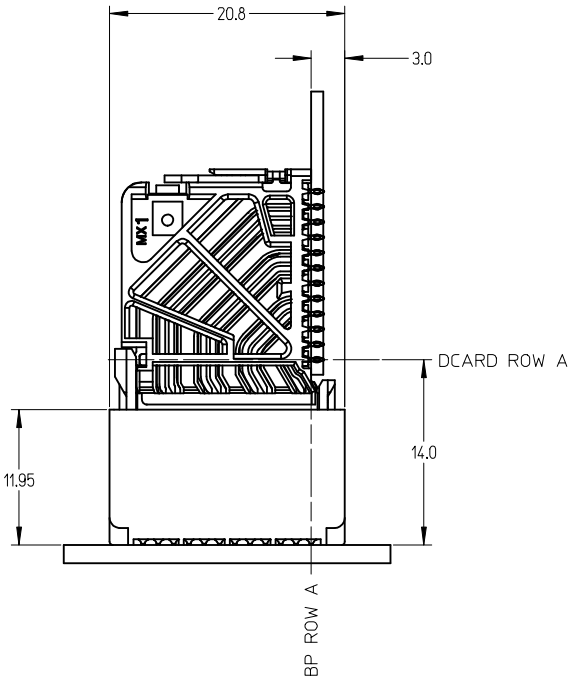

SEE SHEET 1
EC NO: UCP2016-2332 2015/12/08
DRWN:SVANG01 2015/12/08
CHKD:MWOLFE 2015/12/08
APPR:SMILLER 2015/12/17
DESCRIPTION
A
REV

QUALITY SYMBOLS

GENERAL TOLERANCES (UNLESS SPECIFIED)

	mm	INCH
4 PLACES	± ---	± ---
3 PLACES	± ---	± ---
2 PLACES	± 0.13	± ---
1 PLACE	± 0.25	± ---
0 PLACE	± ---	± ---

ANGULAR ±1/2°

DRAFT WHERE APPLICABLE MUST REMAIN WITHIN DIMENSIONS

DIMENSION STYLE: MM ONLY
SCALE: 3:1
DESIGN UNITS: METRIC
THIRD ANGLE PROJECTION

DRAWN BY: SVANG01 DATE: 2015/12/08
CHECKED BY: MWOLFE DATE: 2015/12/08
APPROVED BY: SMILLER DATE: 2015/12/17

TITLE: IMPACT 4-PAIR 85-OHM RIGHT GUIDED BP PDNI ASSEMBLY SALES DRAWING

molex

MATERIAL NO.: SEE CHART
DOCUMENT NO.: RSD-173429-003
SHEET NO.: 3 OF 3
SIZE: C

THIS DRAWING CONTAINS INFORMATION THAT IS PROPRIETARY TO MOLEX INCORPORATED AND SHOULD NOT BE USED WITHOUT WRITTEN PERMISSION

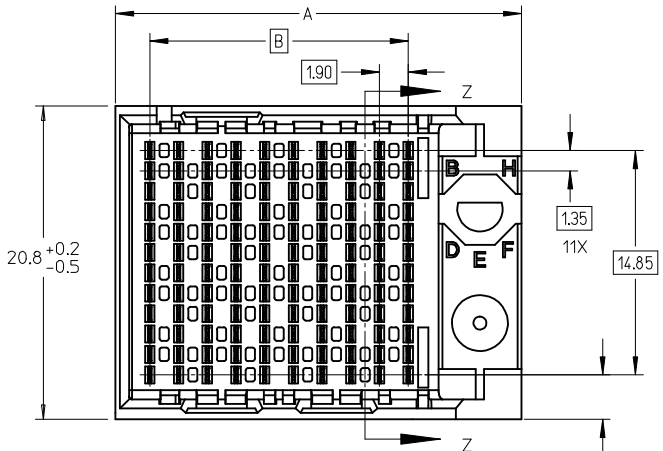

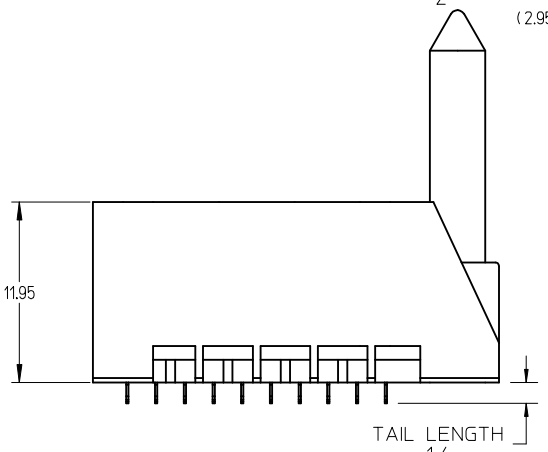

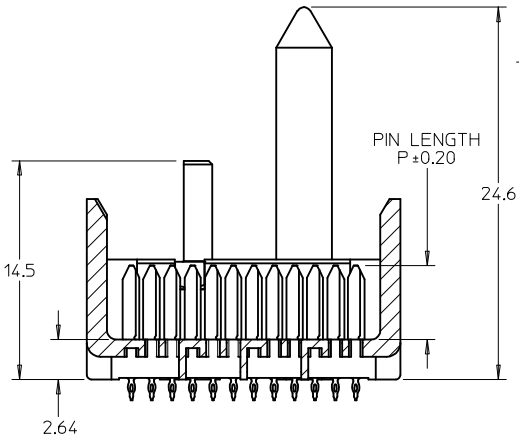

SECTION Z-Z

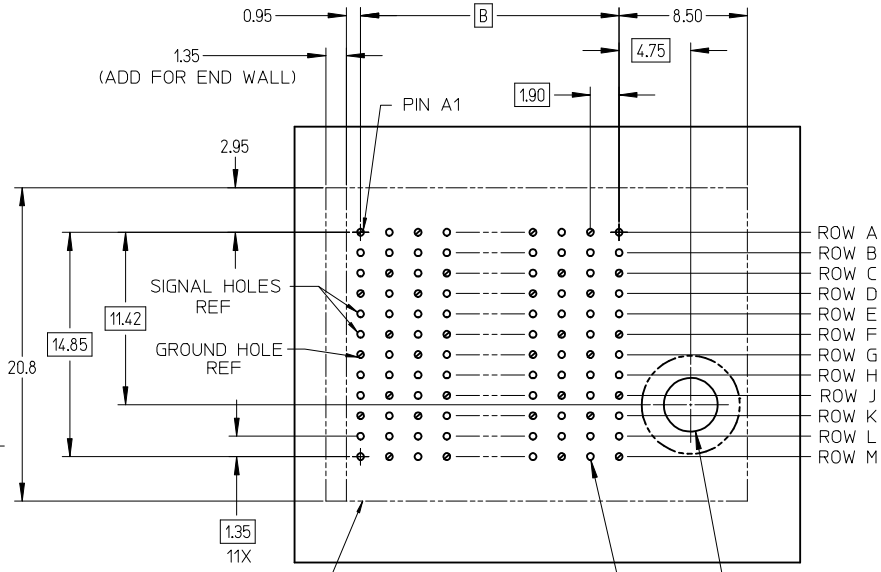

RIGHT GUIDED
BACKPLANE HOLE PATTERN
(CONNECTOR SIDE)
SEE NOTE 6

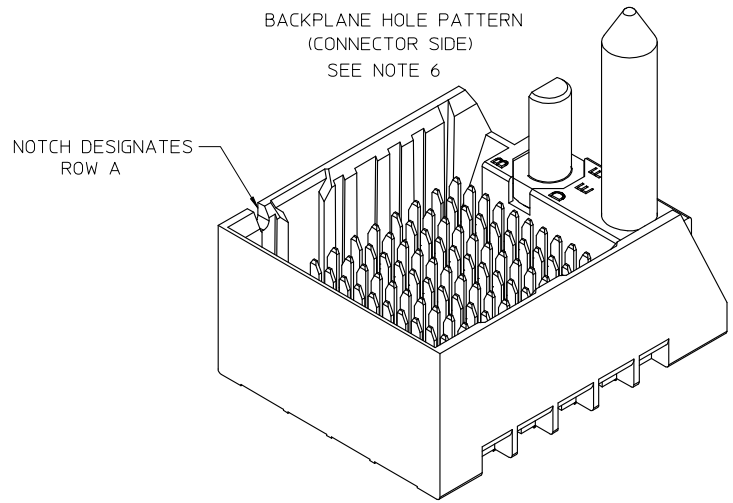

NOTES:

1. MATERIALS: HOUSING - LIQUID CRYSTAL POLYMER (LCP)
   GLASS-FILLED, UL94V-0
   TERMINALS - HIGH PERFORMANCE COPPER ALLOY
2. FINISH: 30μ INCH MIN GOLD IN CONTACT AREA.
   SELECTIVE MATTE TIN ON PCB TAILS, NICKEL OVERALL.
3. REFER TO MOLEX PRODUCT SPECIFICATION PS-170540-999
   FOR PERFORMANCE SPECIFICATIONS AND ADDITIONAL PCB INFORMATION.
4. REFER TO MOLEX PCB ROUTING GUIDE AS-76060-990 FOR ANTIPAD AND ROUTING RECOMMENDATIONS.
5. CONNECTORS SUPPLIED WITH A 2-56 UNC-2A SCREW.
6. "THESE DIMENSIONS REPRESENT THE AREA NEEDED TO ACCOMMODATE CONNECTOR INSERTION AND REPAIR ON THE PC BOARD. THIS IS REFERRED TO AS THE "CONNECTOR KEEP OUT ZONE" AND DOES NOT REPRESENT THE ACTUAL PERIMETER OF THE CONNECTOR. WHEN LAYING OUT THE PC BOARD FOR CONNECTORS STACKED TOGETHER, USE A 1.9mm PROGRESSION."
7. THIS PART CONFORMS TO MOLEX COSMETIC SPEC PS-45499-002 CLASS B.
8. PARTS PACKAGED PER PK-70873-757.
9. SEE SHEETS 2 & 3 FOR PART NUMBERS AND BOARD RELATIONSHIPS.
10. FOR GROUNDED GUIDE PINS USE Ø. 3.56 +/-0.08 (PTH), Ø. 3.66 (DRILL) & Ø 6.5 (PAD).
11. KEEP OUT ZONE FOR BP HOUSING LENGTH INCLUDES AN ADDITIONAL 1.0MM TO ACCOMMODATE FOR SPACE REQUIRED BY DC FRONT HOUSING.
12. MINIMUM CIRCUIT BOARD THICKNESS: 1.0mm

REV	DESCRIPTION
E	ADD 6-COL PARTS EC NO: UCP2013-1920 2012/11/13 DRWN: JB INGHAM 2012/11/13 CHKD: JLAURX 2012/11/16 APPR: JLAURX 2012/11/16

QUALITY SYMBOLS
E =0
F =0
P =0

GENERAL TOLERANCES (UNLESS SPECIFIED)

	mm	INCH
4 PLACES	± ---	± ---
3 PLACES	± ---	± ---
2 PLACES	± 0.13	± ---
1 PLACE	± 0.25	± ---
0 PLACE	± ---	± ---
ANGULAR ±1/2°		

DRAFT WHERE APPLICABLE MUST REMAIN WITHIN DIMENSIONS

DIMENSION STYLE	SCALE	DESIGN UNITS
MM ONLY	4:1	METRIC

THIRD ANGLE PROJECTION

DRAWN BY: JB INGHAM	DATE: 2010/05/18
CHECKED BY: JLAURX	DATE: 2010/05/18
APPROVED BY: JLAURX	DATE: 2012/11/16
MATERIAL NO.: SEE CHART	

TITLE: IMPACT 4-PAIR 85-OHM RIGHT GUIDED BACKPLANE SALES ASSEMBLY DRAWING

molex

DOCUMENT NO.: SD-170335-0003

SHEET NO.: 1 OF 3

SIZE: C

THIS DRAWING CONTAINS INFORMATION THAT IS PROPRIETARY TO MOLEX INCORPORATED AND SHOULD NOT BE USED WITHOUT WRITTEN PERMISSION

PART NUMBER CHART

MATERIAL NUMBER	# OF COLUMNS	# OF DIFF PAIR	DIM "A"	DIM "B"	
170335-93**	6	24	19.3	9.50	GUIDE RIGHT END WALL OPTION
170335-98**	8	32	23.1	13.30	
170335-91**	10	40	26.9	17.10	
170335-92**	12	48	30.7	20.90	
170335-94**	14	56	34.5	24.70	
170335-96**	16	64	38.3	28.50	

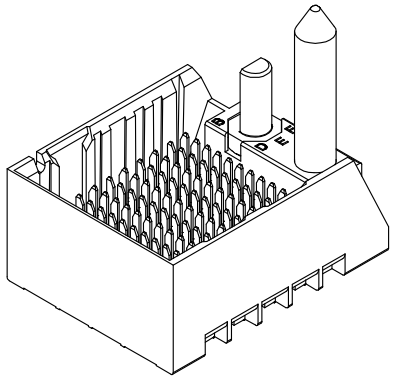

GUIDE RIGHT
END WALL OPTION

MATERIAL NUMBER	# OF COLUMNS	# OF DIFF PAIR	DIM "A"	DIM "B"	
170335-53**	6	24	17.9	9.50	GUIDE RIGHT OPEN WALL OPTION
170335-58**	8	32	21.7	13.30	
170335-51**	10	40	25.5	17.10	
170335-52**	12	48	29.3	20.90	
170335-54**	14	56	33.1	24.70	
170335-56**	16	64	36.9	28.50	

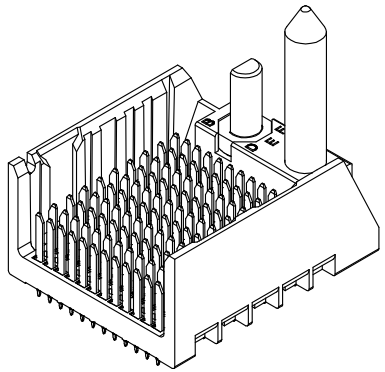

GUIDE RIGHT
OPEN WALL OPTION

PART NUMBER LOGIC

170335-****

MODULE TYPE
5 = GUIDE RIGHT, MATTE TIN
9 = GUIDE RIGHT END WALL, MATTE TIN

PIN LENGTH (P)
3 = 4.50 (SHORT COMPLIANT, 0.46±0.05 PTH)
4 = 4.90 (SHORT COMPLIANT, 0.46±0.05 PTH)
5 = 5.50 (SHORT COMPLIANT, 0.46±0.05 PTH)
6 = 4.50 (MICRO COMPLIANT, 0.39±0.05 PTH)
7 = 4.90 (MICRO COMPLIANT, 0.39±0.05 PTH)
8 = 5.50 (MICRO COMPLIANT, 0.39±0.05 PTH)

# OF COLUMNS
1 = 10 COL
2 = 12 COL
3 = 6 COL
4 = 14 COL
6 = 16 COL
8 = 8 COL

KEY ORIENTATION
0 = NO KEY
1 = A
2 = B
3 = C
4 = D
5 = E
6 = F
7 = G
8 = H

SEE SHEET 1
EC NO: UCP2013-1920 2012/11/13
DRWN: JBINGHAM 2012/11/13
CHKD: JLAURX 2012/11/16
APPR: JLAURX 2012/11/16
DESCRIPTION
REV

QUALITY SYMBOLS
E =0
E =0
E =0

GENERAL TOLERANCES (UNLESS SPECIFIED)

	mm	INCH
4 PLACES	± ---	± ---
3 PLACES	± ---	± ---
2 PLACES	± 0.13	± ---
1 PLACE	± 0.25	± ---
0 PLACE	± ---	± ---

ANGULAR ±1/2°
DRAFT WHERE APPLICABLE MUST REMAIN WITHIN DIMENSIONS

DIMENSION STYLE: MM ONLY
SCALE: 1:1
DESIGN UNITS: METRIC
THIRD ANGLE PROJECTION

		DATE
DRAWN BY	JBINGHAM	2010/05/18
CHECKED BY	JLAURX	2010/05/18
APPROVED BY	JLAURX	2012/11/16

TITLE: IMPACT 4-PAIR 85-OHM RIGHT GUIDED BACKPLANE SALES ASSEMBLY DRAWING

molex

MATERIAL NO.: SEE CHART
DOCUMENT NO.: SD-170335-0003
SHEET NO.: 2 OF 3
SIZE: C

THIS DRAWING CONTAINS INFORMATION THAT IS PROPRIETARY TO MOLEX INCORPORATED AND SHOULD NOT BE USED WITHOUT WRITTEN PERMISSION

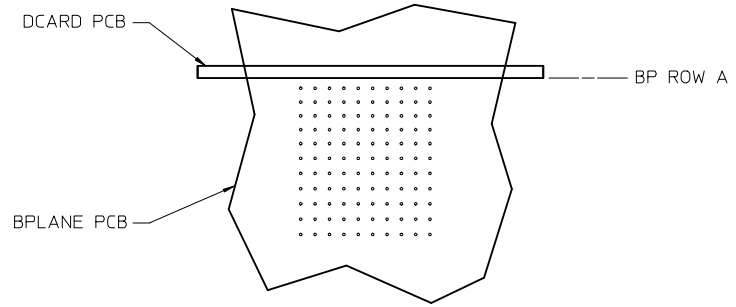

IMPACT 4 PAIR BOARD RELATIONSHIPS

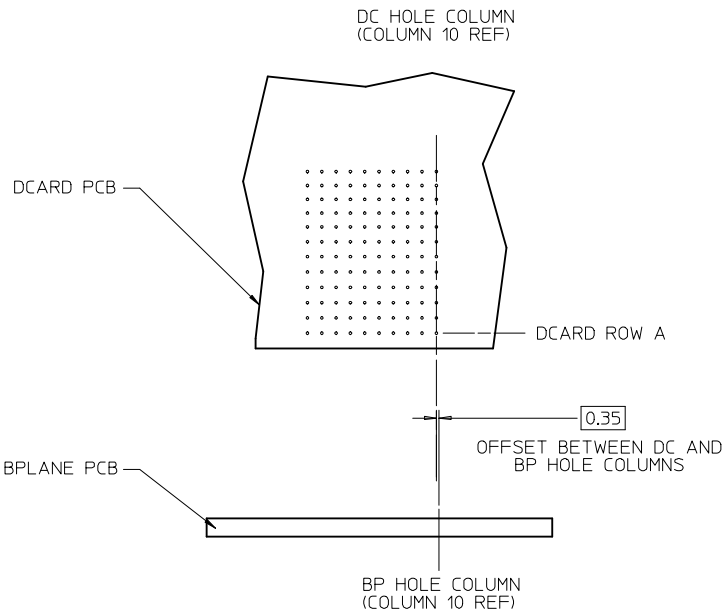

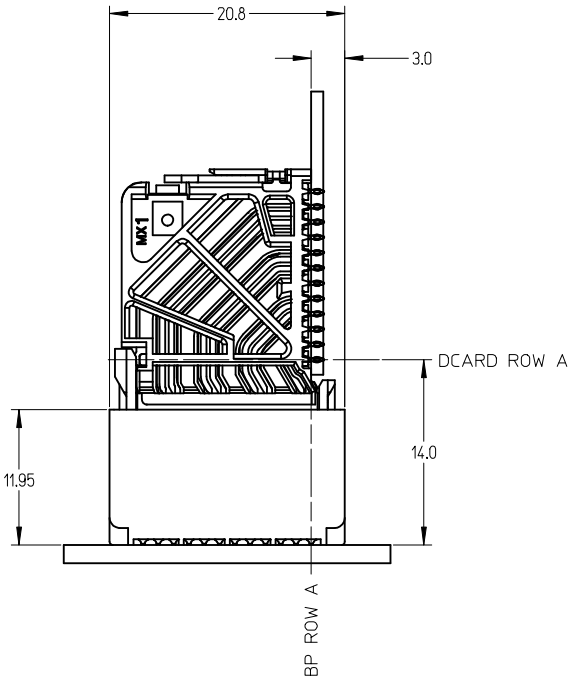

SEE SHEET 1
EC NO: UCP2013-1920 2012/11/13
DRWN: JBINGHAM 2012/11/13
CHKD: JLAURX 2012/11/13
APPR: JLAURX 2012/11/16

DESCRIPTION

REV

QUALITY SYMBOLS

GENERAL TOLERANCES (UNLESS SPECIFIED)

	mm	INCH
4 PLACES	± ---	± ---
3 PLACES	± ---	± ---
2 PLACES	± 0.13	± ---
1 PLACE	± 0.25	± ---
0 PLACE	± ---	± ---

ANGULAR ±1/2°

DRAFT WHERE APPLICABLE MUST REMAIN WITHIN DIMENSIONS

DIMENSION STYLE: MM ONLY
SCALE: 3:1
DESIGN UNITS: METRIC
THIRD ANGLE PROJECTION

DRAWN BY: JBINGHAM DATE: 2010/05/18
CHECKED BY: JLAURX DATE: 2010/05/18
APPROVED BY: JLAURX DATE: 2012/11/16
MATERIAL NO.: SEE CHART

TITLE: IMPACT 4-PAIR 85-OHM RIGHT GUIDED BACKPLANE SALES ASSEMBLY DRAWING

molex

DOCUMENT NO.: SD-170335-0003
SHEET NO.: 3 OF 3
SIZE: C

THIS DRAWING CONTAINS INFORMATION THAT IS PROPRIETARY TO MOLEX INCORPORATED AND SHOULD NOT BE USED WITHOUT WRITTEN PERMISSION