REVISIONS					
REV.	ECN NO.	LOCATION	DESCRIPTION	DATE	DESIGN
A0	N/A		INITIAL RELEASE	/	/
A1	N/A		产品材质及料号变更，图面升级整理图面	2025.09.02	阿树

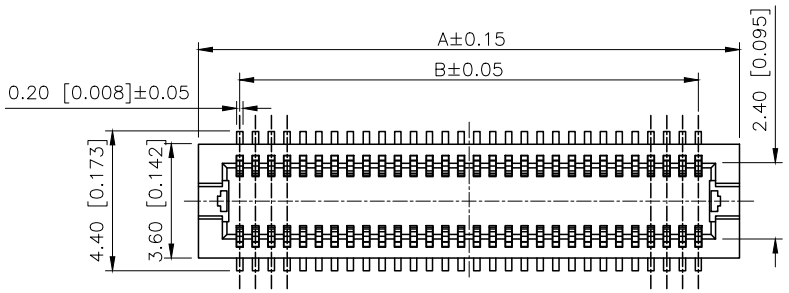

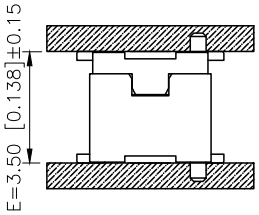

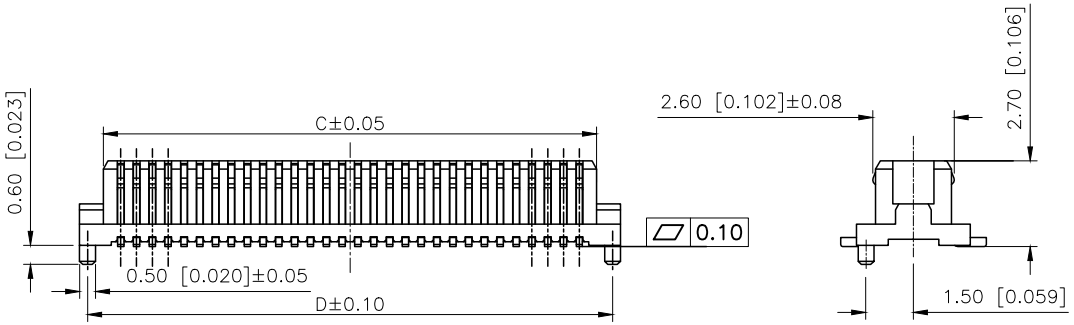

Specifications:
规格：
Voltage rating:100V AC/DC
额定电压：100V AC/DC
Current rating:0.5A AC/DC
额定电流：0.5A AC/DC
Withstanding voltage:150V AC/minute
耐受电压：150V AC/分钟
Temperature range:−40℃−+125℃
温度范围：−40℃−+125℃
Insulation resistance:500MΩ min
绝缘电阻：500MΩ Min
Contact resistance:50mΩ Max
接触电阻：50mΩ Max

PART NO.:

X0502 W V S−60 E S−9T V01
① ② ③ ④ ⑤ ⑥ ⑦ ⑧ ⑨

①Series No
②Category:W−Wafer
③Welding Board Angle:V−Stright 180°
④Welding Way: S−SMT
⑤Row No.Pin No:XX−10~80P
⑥Height:E:3.50mm
⑦Special No:S−With positioning column
⑧Material:9T−PA9T UL94V−0
⑨Plating:V01−Gold flash;

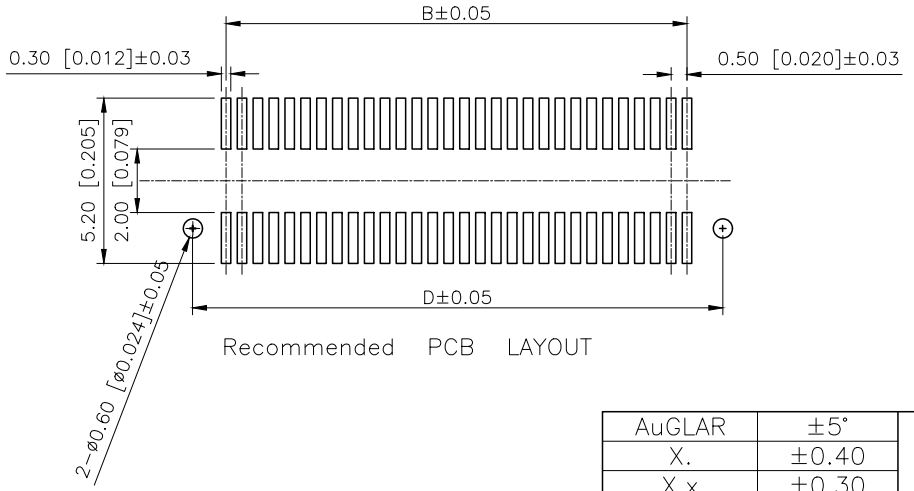

Recommended PCB LAYOUT

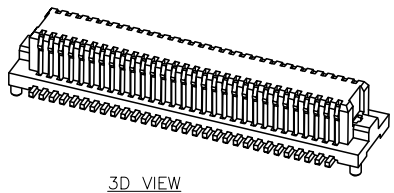

3D VIEW

Poles	Dimensions(mm)				Poles	Dimensions(mm)			
	A	B	C	D		A	B	C	D
10	4.60	2.00	3.10	4.10	32	10.10	7.50	8.60	9.60
12	5.10	2.50	3.60	4.60	36	11.10	8.50	9.60	10.60
14	5.60	3.00	4.10	5.10	40	12.10	9.50	10.60	11.60
20	7.10	4.50	5.60	6.60	50	14.60	12.00	13.10	14.10
22	7.60	5.00	6.10	7.10	60	17.10	14.50	15.60	16.60
24	8.10	5.50	6.60	7.60	80	22.10	19.50	20.60	21.60
30	9.60	7.00	8.10	9.10		/			

X0502WVS−60ES−9TV01	PA9T	Copper Alloy	X0502F	3.50mm
PART NO	Material	Material(Pin)	Suitable XKB Female	Mating Height

AuGLAR	±5°
X.	±0.40
X.x	±0.30
X.xx	±0.20
X.xxx	±0.15
UNSPECIFIED TOLERAuCES	

XKB 星创 Connection

DESIGN	阿树	VIEW:
CHECKED		UNIT: mm/in
APPROVED		SIZE: A4

MODEL TYPE: 0.5mm BTB Connector
PART NO.: X0502WVS−60ES−9TV01
DWG NO.: X−X0502WVS−60ES−9TV01

SCALE	PAGE	REVISION
N/A	1/1	A1

XKB INDUSTRIAL PRECISION CO.,LIMITED