| REVISIONS | | | | | |
|---|---|---|---|---|---|
| REV. | ECN NO. | LOCATION | DESCRIPTION | DATE | DESIGN |
| A1 | N/A | | A: 72~100pin | 2025.07.24 | |
| A2 | ECN-P-2026031801 | Ⓐ2X1 | 4.00: 72~100pin | 2026.03.18 | |

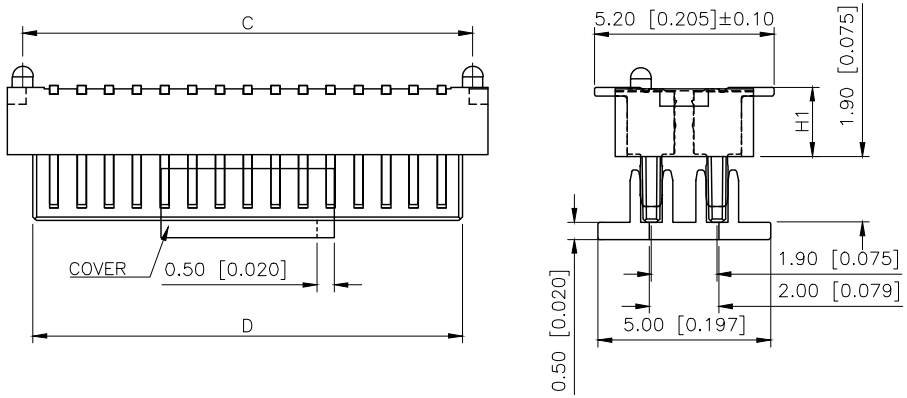


| MATING HEIGHT | PLUG(H1) | SOCKET(H2) |
|---|---|---|
| 4.0 | 1.0 | 3.0 |
| 4.5 | 1.0 | 3.5 |
| 5.0 | 2.0/1.0 | 3.0/4.0 |
| 5.5 | 2.0/1.0 | 3.5/4.5 |
| 6.0 | 2.0 | 4.0 |
| 6.5 | 2.0 | 4.5 |
| 7.0 | 4.0 | 3.0 |
| 7.5 | 4.0 | 3.5 |
| 8.0 | 4.0 | 4.0 |
| 8.5 | 4.0 | 4.5 |

PART NO.:

X0812 W V S-24 A S-9T V01

Series No
Category:W-Wafer
Welding Board Angle:V-Stright 180°
Welding Way: S-SMT
Row No-Pin No:XX-04P-100P
Plug Height:A=1.0mm;B=2.0mm;C=4.0
Special No:S-With positioning Column
Material:9T-PA9T UL94V-0 Black
Plating:V01-Gold Flash

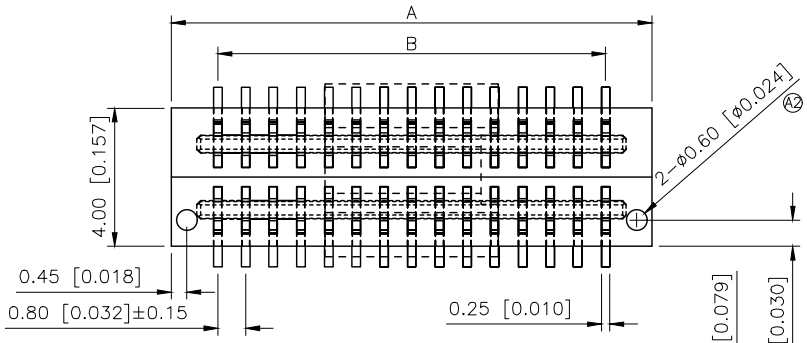


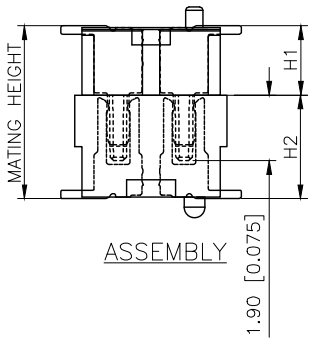


ASSEMBLY

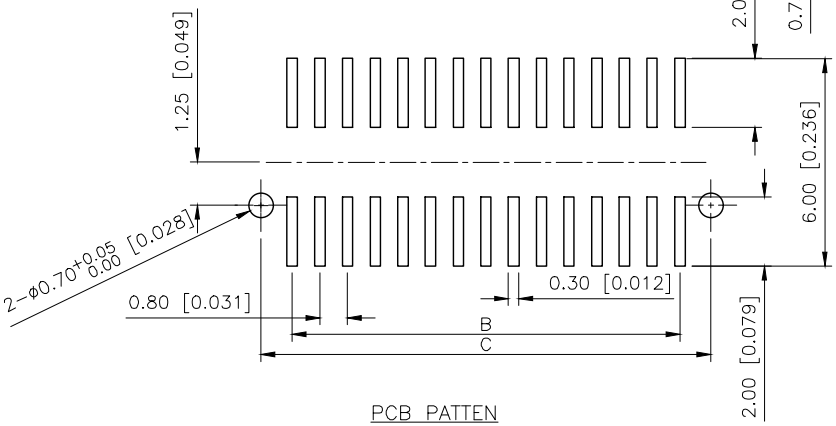


PCB PATTEN

Specifications( )
1.Voltage rating( ):DC 50V
2.Current rating( ):0.5A AC/DC
3.Withstanding voltage( ):≥200V AC/minute
4.Insulation resistance( ):≥100MΩ Min
5.Contact resistance( ):≤50mΩ Max
6.Temperature range( ):-40 ~+125

| No.of contacts | Dimensions | | | | No.of contacts | Dimensions | | | |
|---|---|---|---|---|---|---|---|---|---|
| | A±0.10 | B±0.10 | C±0.10 | D±0.10 | | A±0.10 | B±0.10 | C±0.10 | D±0.10 |
| 8 | 5.10 | 2.40 | 4.20 | 3.60 | 56 | 24.30 | 21.60 | 23.40 | 22.80 |
| 10 | 5.90 | 3.20 | 5.00 | 4.40 | 58 | 25.10 | 22.40 | 24.20 | 23.60 |
| 12 | 6.70 | 4.00 | 5.80 | 5.20 | 60 | 25.90 | 23.20 | 25.00 | 24.40 |
| 14 | 7.50 | 4.80 | 6.60 | 6.00 | 62 | 26.70 | 24.00 | 25.80 | 25.20 |
| 16 | 8.30 | 5.60 | 7.40 | 6.80 | 64 | 27.50 | 24.80 | 26.60 | 26.00 |
| 18 | 9.10 | 6.40 | 8.20 | 7.60 | 66 | 28.30 | 25.60 | 27.40 | 26.80 |
| 20 | 9.90 | 7.20 | 9.00 | 8.40 | 68 | 29.10 | 26.40 | 28.20 | 27.60 |
| 22 | 10.70 | 8.00 | 9.80 | 9.20 | 70 | 29.90 | 27.20 | 29.00 | 28.40 |
| 24 | 11.50 | 8.80 | 10.60 | 10.00 | 72 | 30.70 | 28.00 | 29.80 | 29.20 |
| 26 | 12.30 | 9.60 | 11.40 | 10.80 | 74 | 31.50 | 28.80 | 30.60 | 30.00 |
| 28 | 13.10 | 10.40 | 12.20 | 11.60 | 76 | 32.30 | 29.60 | 31.40 | 30.80 |
| 30 | 13.90 | 11.20 | 13.00 | 12.40 | 78 | 33.10 | 30.40 | 32.20 | 31.60 |
| 32 | 14.70 | 12.00 | 13.80 | 13.20 | 80 | 33.90 | 31.20 | 33.00 | 32.40 |
| 34 | 15.50 | 12.80 | 14.60 | 14.00 | 82 | 34.70 | 32.00 | 33.80 | 33.20 |
| 36 | 16.30 | 13.60 | 15.40 | 14.80 | 84 | 35.50 | 32.80 | 34.60 | 34.00 |
| 38 | 17.10 | 14.40 | 16.20 | 15.60 | 86 | 36.30 | 33.60 | 35.40 | 34.80 |
| 40 | 17.90 | 15.20 | 17.00 | 16.40 | 88 | 37.10 | 34.40 | 36.20 | 35.60 |
| 42 | 18.70 | 16.00 | 17.80 | 17.20 | 90 | 37.90 | 35.20 | 37.00 | 36.40 |
| 44 | 19.50 | 16.80 | 18.60 | 18.00 | 92 | 38.70 | 36.00 | 37.80 | 37.20 |
| 46 | 20.30 | 17.60 | 19.40 | 18.80 | 94 | 39.50 | 36.80 | 38.60 | 38.00 |
| 48 | 21.10 | 18.40 | 20.20 | 19.60 | 96 | 40.30 | 37.60 | 39.40 | 38.80 |
| 50 | 21.90 | 19.20 | 21.00 | 20.40 | 98 | 41.10 | 38.40 | 40.20 | 39.60 |
| 54 | 23.50 | 20.80 | 22.60 | 22.00 | 100 | 41.90 | 39.20 | 41.00 | 40.40 |

| AuGLAR | ±5° |
|---|---|
| X. | ±0.40 |
| X.x | ±0.30 |
| X.xx | ±0.20 |
| X.xxx | ±0.15 |
| UNSPECIFIED TOLERAuCES | |

XKB 星竹 Connection

| | | | |
|---|---|---|---|
| DESIGN | | VIEW: | MODEL TYPE: 0.8mm BTB Style Connectors |
| CHECKED | | UNIT: mm/in | PART NO.: X0812WVS-24AS-9TV01 |
| APPROVED | | SIZE: A4 | DWG NO.: |

XKB INDUSTRIAL PRECISION CO.,LIMITED

| SCALE | PAGE | REVISION |
|---|---|---|
| N/A | 1/1 | A2 |